SM301 Control Module (8)

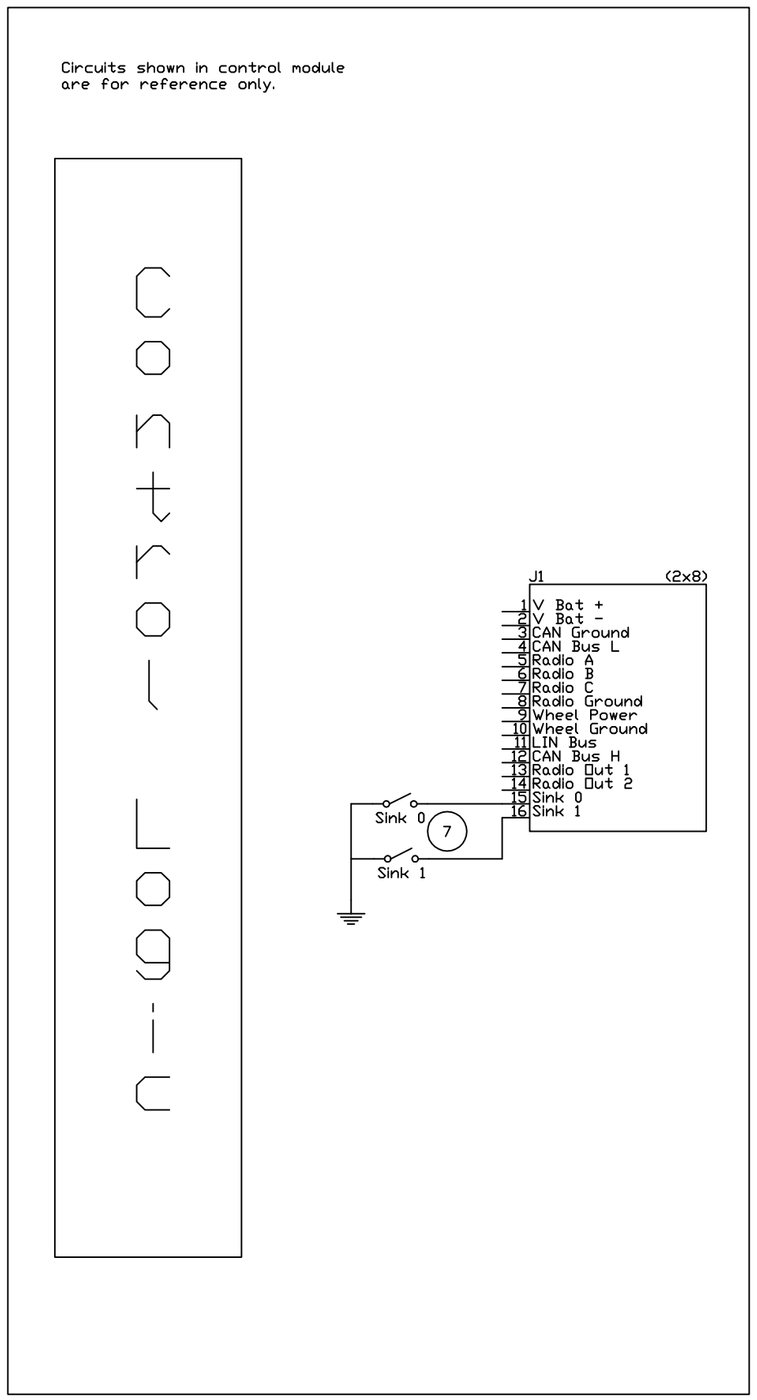

Suggested Chassis Wiring (9)

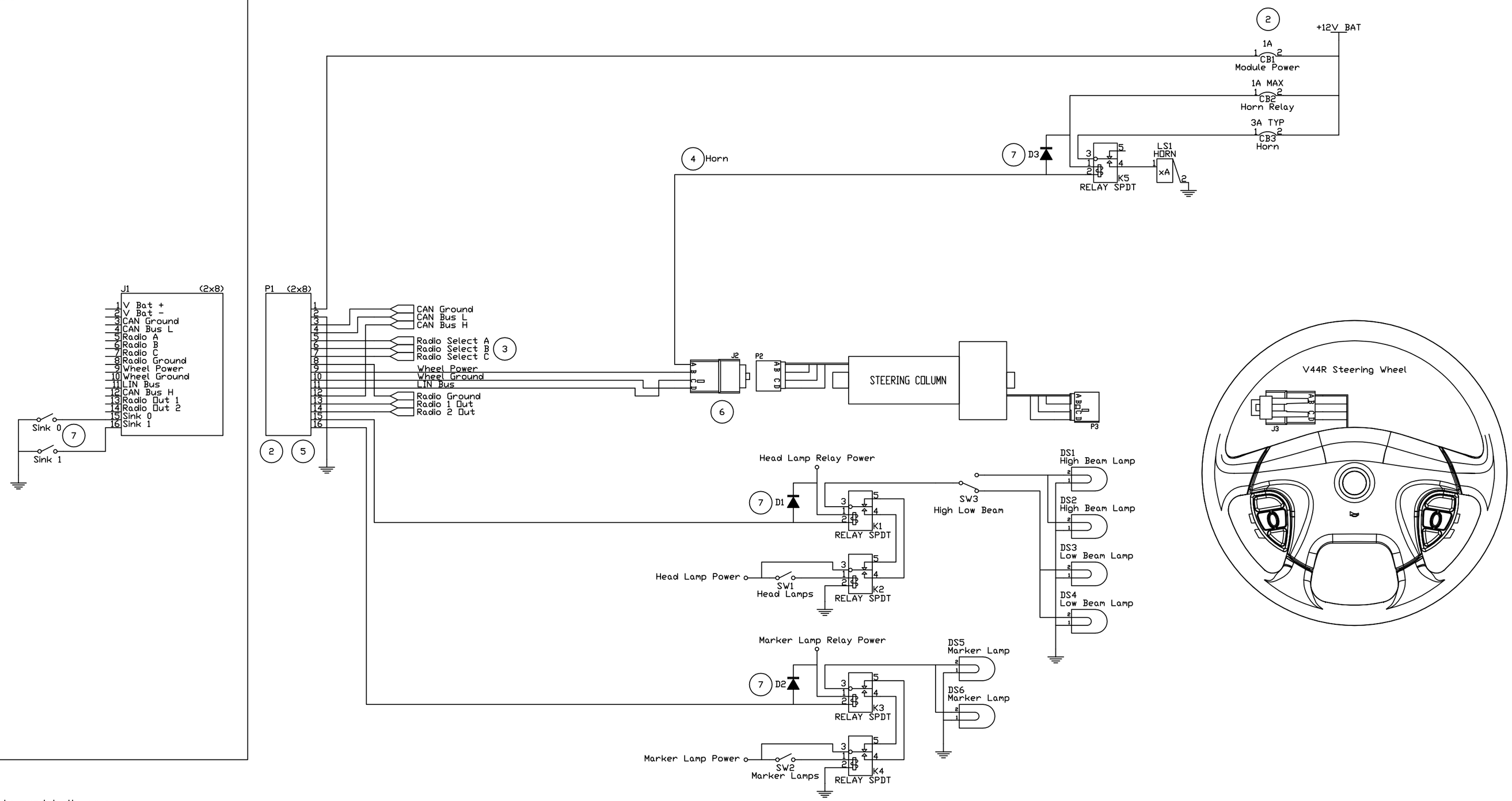

NOTES

(1) The control module is designed to mount in the passenger compartment of the vehicle. The rated operating temperature range is -40 to +85 degrees C. The control module must not be exposed to the higher operating temperatures and moisture levels typical of the engine compartment or exposed areas of the vehicle.

(2) Circuit breaker ratings provided are typical or max allowable with appropriate wire selection. Proper wire and circuit protection is the responsibility of the installer. Unlabeled connections to controller are rated for 1 A max.

(3) Radio connection and operation information is provided as-is with no guarantee of function for any given radio. Radio manufactures' inputs and controls vary from year to year and model to model. It is the responsibility of the installer to verify the correct wiring and functionality of any given radio with this system. Installer assumes all liability for any damage to control module, radio, etc

RADIO CONNECTIONS (TYPICAL)	
RADIO GROUND	3.5 MM PLUG SLEEVE
RADIO 1 OUT	3.5 MM PLUG TIP
RADIO 2 OUT	3.5 MM PLUG RING

	RAD SEL A | RAD SEL B | RAD SEL C
JENSEN	See VIP document 002047-T1V-00.DOC for radio configuration
KENWOOD	
MAGNADYNE	
PIONEER	

(4) The horn may be hard-wired as shown or may be driven via the CAN bus

(5) Control Module Connector (Harness side)
P1: Amp Mini Universal Mate-N-Lok 16 pos Housing 770583-1
Amp Mini Universal Mate-N-Lok socket contact 16-20 AWG 770583-1

(6) Column Connector:
J2: Packard Housing 12092163
Packard AWG 20 Terminal 12047581

(7) Flyback Diode required if switching inductive load

(8) Control Module drawing is representative of base module SM301. Also applies to derivatives SM30x and SM32x.

(9) Suggested Chassis Wiring is for example only - actual wiring and functions controlled on any given vehicle are determined by chassis builder and will vary. See chassis builder's documentation.

PART REV	DRW REV	DESCRIPTION	DATE
A	B	Added notes 8 & 9	01-09-2015
A	A	Release	03-14-2011

DIM PL	ENG	MM
X.	.060	1.524
.X	.030	.762
.XX	.010	.254
.XXX	.005	.127

ANGLES ± 2°

THIS DRAWING AND ITS INFORMATION IS CONFIDENTIAL. IT IS THE PROPERTY OF VIP INC., AND MUST NOT BE MADE PUBLIC OR USED IN ANY WAY DETRIMENTAL TO TO THE INTERESTS OF VIP INC.

VEHICLE IMPROVEMENT PRODUCTS INC.

DRAWN BY	TITLE	FILE NO.
DK	WIRING DIAGRAM, SM301	02047
DATE 03-08-2011	SCALE NONE	DRAWING NO. 002047-E1V-00
SIZE C	ANTIOCH, IL USA (847)-395-7250	