Tektronix®
COMMITTED TO EXCELLENCE

WARNING

THE FOLLOWING SERVICING INSTRUCTIONS ARE FOR USE BY QUALIFIED PERSONNEL ONLY. TO AVOID PERSONAL INJURY, DO NOT PERFORM ANY SERVICING OTHER THAN THAT CONTAINED IN OPERATING INSTRUCTIONS UNLESS YOU ARE QUALIFIED TO DO SO.

465B
OSCILLOSCOPE
WITH OPTIONS

SERVICE

INSTRUCTION MANUAL

Tektronix, Inc.
P.O. Box 500
Beaverton, Oregon 97077

Serial Number _____

070-2757-00

First Printing APR 1979

http://manoman.sqhill.com

Copyright © 1979 Tektronix, Inc. All rights reserved. Contents of this publication may not be reproduced in any form without the written permission of Tektronix, Inc.

Products of Tektronix, Inc. and its subsidiaries are covered by U.S. and foreign patents and/or pending patents.

TEKTRONIX, TEK, SCOPE-MOBILE, and  are registered trademarks of Tektronix, Inc. TELEQUIPMENT is a registered trademark of Tektronix U.K. Limited.

Printed in U.S.A. Specification and price change privileges are reserved.

http://manoman.sqhill.com

TABLE OF CONTENTS

		Page
	LIST OF ILLUSTRATIONS	vi
	LIST OF TABLES	viii
	SAFETY SUMMARY	ix
SECTION 1	**INTRODUCTION AND SPECIFICATION**	
	INTRODUCTION	1-1
	SPECIFICATION	1-1
SECTION 2	**OPERATION INSTRUCTIONS**	
	INSTALLATION	2-1
	PREPARATION FOR USE	2-1
	Safety Considerations	2-1
	Line Voltage Selection	2-1
	Regulating Range Selection	2-2
	Instrument Cooling	2-3
	Rackmounting	2-3
	CONTROLS, CONNECTORS, AND INDICATORS	2-3
	VERTICAL	2-3
	DISPLAY AND CALIBRATOR	2-4
	TRIGGER	2-5
	HORIZONTAL AND POWER	2-7
	REAR PANEL	2-8
	LEFT SIDE PANEL	2-9
	RIGHT SIDE PANEL	2-9
	BASIC OSCILLOSCOPE DISPLAYS	2-10
	PRESET INSTRUMENT CONTROLS	2-10
	NORMAL SWEEP DISPLAY	2-10
	MAGNIFIED SWEEP DISPLAY	2-10
	DELAYED SWEEP DISPLAY	2-10
	ALTERNATE SWEEP DISPLAY	2-11
	SINGLE SWEEP DISPLAY	2-11
	X-Y DISPLAY	2-11
	RACKMOUNTING	2-12
	DIMENSIONS	2-12
	SLIDE-OUT TRACKS	2-12
	MOUNTING PROCEDURE	2-16
	ALTERNATIVE REAR MOUNTING METHODS	2-21
	REMOVING OR INSTALLING THE INSTRUMENT	2-21
	SLIDE-OUT TRACK LUBRICATION	2-21

http://manoman.sqhill.com

TABLE OF CONTENTS (cont)

		Page
SECTION 3	**THEORY OF OPERATION**	
	INTRODUCTION	3-1
	SECTION ORGANIZATION	3-1
	INTEGRATED CIRCUIT DESCRIPTIONS	3-1
	GENERAL DESCRIPTION	3-2
	DETAILED DESCRIPTION	3-4
	CHANNEL 1 PREAMP	3-4
	CHANNEL 2 PREAMP	3-6
	VERTICAL SWITCHING LOGIC	3-6
	VERTICAL MODE SWITCH	3-9
	VERTICAL OUTPUT AMPLIFIER	3-10
	A AND B TRIGGER GENERATORS	3-11
	SWEEP AND Z AXIS LOGIC CIRCUIT	3-12
	A AND B SWEEP GENERATORS	3-16
	HORIZONTAL DISPLAY LOGIC	3-18
	HORIZONTAL AMPLIFIER	3-18
	CRT CIRCUIT	3-20
	CALIBRATOR	3-24
	LOW-VOLTAGE POWER SUPPLY	3-25
	FAN MOTOR CIRCUIT	3-27
SECTION 4	**CALIBRATION PROCEDURE**	
	Introduction	4-1
	Test Equipment Required	4-1
	PERFORMANCE CHECK	4-4
	INDEX TO PERFORMANCE CHECK PROCEDURE	4-5
	VERTICAL	4-6
	TRIGGERS	4-12
	HORIZONTAL	4-15
	ADJUSTMENT PROCEDURE	4-19
	INDEX TO ADJUSTMENT PROCEDURE	4-21
	POWER SUPPLY	4-23
	DISPLAY AND Z AXIS	4-25
	VERTICAL	4-27
	TRIGGERS	4-40
	HORIZONTAL	4-52
	GATES, CALIBRATOR, AND EXT Z AXIS	4-61

http://manoman.sqhill.com

TABLE OF CONTENTS (cont)

SECTION 5	MAINTENANCE	Page
	INTRODUCTION	5-1
	CABINET AND RACK ADAPTER REMOVAL	5-1
	PREVENTIVE MAINTENANCE	5-3
	Introduction	5-3
	Cleaning	5-3
	Visual Inspection	5-4
	Lubrication	5-4
	Semiconductor Checks	5-4
	Readjustment	5-4
	TROUBLESHOOTING	5-5
	Introduction	5-5
	Troubleshooting Aids	5-5
	Troubleshooting Equipment	5-9
	Troubleshooting Techniques	5-9
	CORRECTIVE MAINTENANCE	5-11
	Introduction	5-11
	Maintenance Precautions	5-11
	Static Sensitive Components	5-11
	Obtaining Replacement Parts	5-12
	Soldering Techniques	5-12
	Component Removal and Replacement	5-13
	Readjustment After Repair	5-21
	Instrument Repackaging	5-21
	Required Reshipment Information	5-21
	MAINTENANCE AIDS	5-22
SECTION 6	OPTIONS	
	GENERAL OPTION INFORMATION	6-1
	OPTION 04	6-3
	INTRODUCTION	6-3
	OPTION 04 REPLACEABLE ELECTRICAL PARTS LIST	6-4
	OPTION 04 REPLACEABLE MECHANICAL PARTS LIST	6-4
	OPTION 05 TV SYNC SEPARATOR	6-5
	INTRODUCTION	6-5
	SPECIFICATION	6-5
	FURNISHED ACCESSORIES	6-6

http://manoman.sqhill.com

TABLE OF CONTENTS (cont)

SECTION 6 OPTIONS (cont)	Page
OPERATING INFORMATION	6-6
Installation of Video Graticule	6-6
Operation of the Sync Separator	6-7
Triggering the Sweep	6-7
Vertical Operating Modes—Special Consideration	6-7
Typical Operation	6-8
Selecting an Individual Line	6-8
Special Measurements	6-8
IDENTIFYING FIELDS, FRAMES, AND LINES IN 525/60 AND 625/50 TV SYSTEMS	6-9
NTSC (CCIR System M)	6-9
CCIR System B and Similar 625/50 Systems (including PAL)	6-9
THEORY OF OPERATION	6-10
Introduction	6-10
Switching	6-10
Trigger Pickoff	6-10
Trigger Amplifier and Inverter	6-11
Sync Separator	6-11
ADJUSTMENT PROCEDURE	6-12
Introduction	6-12
Preliminary Procedure for Sync Separator Calibration	6-12
Procedure	6-13
OPTION 05 REPLACEABLE ELECTRICAL PARTS LIST	6-19
OPTION 05 REPLACEABLE MECHANICAL PARTS LIST	6-21
OPTION 07 EXTERNAL DC OPERATION	6-23
INTRODUCTION	6-23
SPECIFICATION	6-23
CONTROLS AND CONNECTORS	6-23
OPERATION AND INSPECTION	6-23
THEORY OF OPERATION	6-23
General Description	6-24
Turn-Off Level Circuit	6-24
Turn-Off Circuit	6-25
Start Circuit	6-25
Inverter Circuit	6-26
DC Input	6-26
Start-Stop Switch	6-27
Power-Mode Switch (S1665)	6-27
MAINTENANCE	6-27
ADJUSTMENT	6-28
OPTION 07 REPLACEABLE ELECTRICAL PARTS LIST	6-33
OPTION 07 REPLACEABLE MECHANICAL PARTS LIST	6-36
OPTION 78 TYPE P11 PHOSPHOR	6-39

http://manoman.sqhill.com

TABLE OF CONTENTS (cont)

SECTION 7 REPLACEABLE ELECTRICAL PARTS LIST

SECTION 8 DIAGRAMS

SECTION 9 REPLACEABLE MECHANICAL PARTS LIST

ACCESSORIES TAB PAGE

CHANGE INFORMATION

http://manoman.sqhill.com

LIST OF ILLUSTRATIONS

Figure		Page
1-1	465B Oscilloscope	xii
2-1	Commonly used power plugs	2-2
2-2	Regulating range selector and line fuse	2-2
2-3	Vertical controls, connectors, and indicators	2-3
2-4	Display controls and calibrator	2-5
2-5	Trigger controls, connectors, and indicators	2-7
2-6	Horizontal and power connectors, controls, and indicators	2-8
2-7	Rear panel and left side panel controls, connectors, and indicators	2-9
2-8	Dimensional drawing	2-13
2-9	Dimensional drawing (cont)	2-14
2-10	Slide-out track assemblies	2-15
2-11	Hardware needed to mount the instrument in the cabinet rack	2-15
2-12	Rear support kit	2-16
2-13	Installing the support block on the instrument	2-16
2-14	Methods of mounting the stationary section to the front rails	2-17
2-15	Locating the mounting holes for the left stationary section. Same dimensions apply to right stationary section	2-18
2-16	Supporting the rear stationary sections: (A) Dimensions necessary; (B) Completed installation	2-19
2-17	Procedure for inserting or removing the instrument after the slide-out tracks have been installed	2-20
2-18	Alignment adjustment for correct operation	2-21
2-19	Alternative method of installing the instrument using rear support brackets	2-22
3-1	Basic block diagram of the 465B Oscilloscope	3-1
3-2	Detailed block diagram of the Channel 1 Preamplifier circuit	3-4
3-3	Detailed block diagram of the Vertical Switching Logic circuit	3-7
3-4	Switching waveform at the junction of R1903 and R1904	3-8
3-5	Vertical Alt Sync Pulse at U1705 pin 9	3-9
3-6	Detailed block diagram of the Sweep and Z-Axis Logic circuit	3-14
3-7	Detailed block diagram of the A Sweep Generator circuit	3-16
3-8	Detailed block diagram of the Horizontal Amplifier circuit	3-19
3-9	Detailed block diagram of the CRT and Z-Axis Amplifier circuit	3-21
3-10	(A) Sinusoidal sample voltage at center tap of T4015. (B) Clamped sample voltage at the junction of CR4111 and CR4112	3-23
3-11	(A) Z-Axis Amplifier output. (B) Clamped sample voltage at the junction of CR4111 and CR4112	3-24
3-12	Detailed block diagram of the Calibrator circuit	3-24
3-13	Calibrator circuit waveform diagram	3-25
3-14	Detailed block diagram of the Low-Voltage Power Supply circuit	3-26
3-15	Foldover circuit action	3-27
4-1	Typical display when high-frequency compensation is correctly adjusted	4-35

http://manoman.sqhill.com

LIST OF ILLUSTRATIONS (cont)

Figure		Page
5-1	Removing the wrap-around cabinet.	5-1
5-2	Partial Table 5-1.	5-6
5-3	Color codes.	5-8
5-4	Locations of power transformer secondary wires.	5-17
6-1	465B Option 04 primary winding with power-line filter.	6-3
6-2	465B Oscilloscope with Option 05.	6-5
6-3	Option 05 simplified block diagram.	6-10
6-4	A12 Sync Separator and Inverter Amplifier board component locations.	6-15
6-5	Option 05 465B Vertical Input changes.	6-15
6-6	Option 05 Trigger Switches and Trigger Pickoff.	6-16
6-7	Option 05 TV Sync Separator and Inverter Amplifier.	6-17
6-8	Option 07 simplified block diagram.	6-24
6-9	465B Option 07 DC Inverter.	6-25
6-10	465B Option 07 primary winding.	6-26
6-11	Typical battery pack discharge curves.	6-28
6-12	Option 07 Inverter balance.	6-29
6-13	Option 07 DC Inverter circuit board adjustment and test point locations.	6-30
6-14	Option 07 DC Inverter idealized waveforms.	6-30
6-15	Option 07 DC Inverter circuit board component locations.	6-31
6-16	Option 07 Exploded.	6-37
8-1	Semiconductor lead configuration.	
8-2	A3 Attenuator circuit board.	
8-3	A1 Vertical Preamplifier circuit board.	
8-4	A5 Vertical Mode Switch circuit board.	
8-5	A2 Vertical Output circuit board.	
8-6	A7 A and B Trigger Generator circuit board.	
8-7	A4 Interface circuit board.	
8-8	A6 Timing circuit board.	
8-9	A8 Fan circuit board.	
8-10	Interface circuit board adjustment locations.	
8-11	Vertical Preamplifier circuit board adjustment locations.	
8-12	Vertical Output Amplifier circuit board adjustment locations.	
8-13	Trigger Generator and Sweep Logic circuit board adjustment locations.	
8-14	Timing circuit board adjustment locations.	

http://manoman.sqhill.com

LIST OF TABLES

Table		Page
1-1	ELECTRICAL CHARACTERISTICS	1-1
1-2	ENVIRONMENTAL CHARACTERISTICS	1-11
1-3	PHYSICAL CHARACTERISTICS	1-12
2-1	POWER CORD CONDUCTOR IDENTIFICATION	2-1
2-2	REGULATING RANGE	2-2
2-3	FUSE SELECTION	2-3
4-1	TEST EQUIPMENT REQUIRED	4-1
4-2	DEFLECTION FACTOR LIMITS	4-8
4-3	LOW-FREQUENCY COMPENSATION SETUP	4-9
4-4	A AND B TIMING ACCURACY	4-16
4-5	DELAY OR DIFFERENTIAL TIME ACCURACY	4-17
4-6	ADJUSTMENT INTERACTIONS	4-20
4-7	LOW VOLTAGE POWER SUPPLY LIMITS	4-24
4-8	TYPICAL LOW VOLTAGE POWER SUPPLY RIPPLE	4-24
4-9	VERTICAL DEFLECTION ACCURACY	4-30
4-10	MAXIMUM OVERSHOOT OR ROUNDING	4-32
4-11	VERTICAL OUTPUT LOW-FREQUENCY COMPENSATION	4-32
4-12	CH 1 LOW-FREQUENCY COMPENSATION	4-33
4-13	CH 2 LOW-FREQUENCY COMPENSATION	4-33
4-14	VOLTS/DIV COMPENSATION	4-35
4-15	A AND B TIMING ACCURACY	4-56
4-16	A AND B MAGNIFIED ACCURACY	4-57
4-17	DIFFERENTIAL TIME ACCURACY	4-58
5-1	READ-ONLY MEMORY U1605 LOGIC	5-7
5-2	SUGGESTED TROUBLESHOOTING EQUIPMENT	5-23
6-1	OPTION 05 TEST EQUIPMENT REQUIRED	6-13
6-2	OPTION 07 TEST EQUIPMENT REQUIRED	6-27

http://manoman.sqhill.com

OPERATORS SAFETY SUMMARY

The general safety information in this summary is for both operating personnel and servicing personnel. Specific warnings and cautions will be found throughout the manual where they apply and do not appear in this summary.

TERMS

In This Manual

CAUTION statements identify conditions or practices that could result in damage to the equipment or other property.

WARNING statements identify conditions or practices that could result in personal injury or loss of life.

As Marked on Equipment

CAUTION indicates either a personal injury hazard not immediately accessible as you read the marking or a hazard to property including the equipment itself.

DANGER or WARNING—HIGH VOLTAGE indicates a personal injury hazard immediately accessible as you read the marking.

SYMBOLS

In This Manual


This symbol is used on schematic diagrams having static-sensitive components.

As Marked on Equipment


DANGER — High voltage.


Protective ground (earth) terminal.

http://manoman.sqhill.com

PRECAUTIONS

Power Source

This product is intended to operate from a power source that will not apply more than 250 volts rms between the supply conductors or between either supply conductor and ground. A protective ground connection by way of the grounding conductor in the power cord is essential for safe operation.

Grounding the Product

This product is grounded through the grounding conductor of the power cord. To avoid electrical shock, plug the power cord into a properly wired receptacle before connecting to the product input or output terminals. A protective ground connection by way of the grounding conductor in the power cord is essential for safe operation.

Use the Proper Power Cord

Use only the power cord and connector specified for your product.
Use only a power cord that is in good condition.

For detailed information on power cords and connectors, see Installation instructions in Section 2 of this manual.

Refer cord and connector changes to qualified service personnel.

Use the Proper Fuse

To avoid fire hazard, use only the fuse specified in the parts list for this product and having identical type, voltage rating, and current rating characteristics (see Installation instructions in Section 2 of this manual).

Refer internal fuse replacement to qualified service personnel.

Do Not Operate in Explosive Atmospheres

To avoid explosion, do not operate this product in an atmosphere of explosive gases unless it has been specifically certified for such operation.

Do Not Remove Covers or Panels

To avoid personal injury, do not remove the product covers or panels. Do not operate the product without the covers and panels properly installed.

http://manoman.sqhill.com

SERVICING SAFETY SUMMARY

FOR QUALIFIED SERVICE PERSONNEL ONLY

Refer also to the preceding Operators Safety Summary.

Do Not Service Alone

Do not perform internal service or adjustment of this product unless another person capable of rendering first aid and resuscitation is present.

Use Care When Servicing With Power On

Dangerous voltages exist at several points in this product. To avoid personal injury, do not touch exposed connections and components while power is on.

Disconnect power before removing protective panels, replacing components, or soldering.

Power Source

This product is intended to operate from a power source that will not apply more than 250 volts rms between the supply conductors or between either supply conductor and ground. A protective ground connection by way of the grounding conductor in the power cord is essential for safe operation.

http://manoman.sqhill.com



Figure 1-1. 465B Oscilloscope.

http://manoman.sqhill.com

INTRODUCTION AND SPECIFICATION

INTRODUCTION

The TEKTRONIX 465B Oscilloscope is a dual-channel, four-trace portable instrument, providing traces for two input channels, a trigger view from an external trigger input, and an add function. Calibrated deflection factors from 5 millivolts/division to 5 volts/division are provided by the dc-to-100 MHz vertical system for the input channels and add function. Sweep trigger circuits are capable of stable triggering over the full bandwidth capabilities of the vertical deflection system. The horizontal deflection system provides calibrated sweep rates from 0.5 second/division to 0.02 microsecond/division along with delayed sweep features for accurate relative-time measurements. A X10 magnifier extends the calibrated sweep rate to 2 nanoseconds/division. The instrument operates over a wide variation of line voltages and frequencies with maximum power consumption of approximately 100 watts.

Increased measurement capabilities are achieved by the 465B when it is equipped with an optional TEKTRONIX DM44 Digital Multimeter. The DM44 measures 0 to 20 megohms resistance, 0 to 1200 dc volts (+ or −), and −55°C to +150°C temperature (using a temperature probe). Measurement values are displayed on a 3 1/2-digit LED readout while the oscilloscope continues normal operation.

The digital multimeter and oscilloscope combine to provide a digital readout of time difference between any two points on the oscilloscope display. Both time measurement points are displayed simultaneously on the crt. Direct measurement of frequency is provided by a 1/TIME function.

This manual provides service information only for the 465B Oscilloscope. Service information for the DM44 Digital Multimeter is contained in a separate DM44 Service manual.

SPECIFICATION

The following electrical characteristics (Table 1-1) are valid only if the instrument has been calibrated at an ambient temperature between +20°C and +30°C, the instrument is operating at an ambient temperature between 0°C and +50°C (unless otherwise noted), and the instrument has had a warmup period of about 20 minutes.

Environmental characteristics of the 465B are presented in Table 1-2, and physical characteristics listed in Table 1-3.

Table 1-1

ELECTRICAL CHARACTERISTICS

Characteristics	Performance Requirements	Supplemental Information
VERTICAL SYSTEM		
Deflection Factor		
Range	5 mV per division to 5 V per division in 10 steps, with a 1-2-5 sequence.	
Uncalibrated (VAR) Range	Continuously variable between settings. Extends deflection factor to at least 12.5 V per division.	
Accuracy	Within 3%	Gain set at 5 mV per division.

http://manoman.sqhill.com

Table 1-1 (cont)

Characteristics	Performance Requirements	Supplemental Information
VERTICAL SYSTEM (cont)		
Low-Frequency Linearity		0.1 division or less compression or expansion of a 2-division signal at center screen with waveform positioned to upper and lower extremes of graticule area.
Frequency Response		5-division reference signal centered vertically from a 25 Ω source with VAR VOLTS/DIV control in calibrated detent position.
Bandwidth		
−15°C to +40°C	Dc to at least 100 MHz.	
+40°C to +55°C	Dc to at least 85 MHz.	
AC Coupled Lower −3 dB Point		
1X Probe	10 Hz or less.	
10X Probe	1 Hz or less.	
Step Response		5-division reference signal centered vertically, dc coupled at all deflection factors, from a 25 Ω source with VAR VOLTS/DIV control in calibrated detent position.
Rise Time (0°C to +40°C)	3.5 ns or less.	
Positive-Going Step (Excluding ADD Mode)		
Aberrations (0°C to +40°C)		+4%, −4%, 4% p-p or less (5 mV to 2 V). +6%, −6%, 6% p-p or less (5 V setting only).
Position Effect (0°C to +40°C)		Total aberrations less than +6%, −6%, 6% p-p; checked at 5 mV per division.
Negative-Going Step		Add 2% to all positive-going step specifications; checked at 5 mV per division.
ADD Mode Operation		Add 5% to all aberration specifications; checked at 5 mV per division.
Common-Mode Rejection Ratio (ADD Mode with Channel 2 Inverted)		At least 10:1 at 20 MHz for common mode signals of 6 divisions or less, with GAIN adjusted for best CMRR at 50 kHz.

http://manoman.sqhill.com

Table 1-1 (cont)

Characteristics	Performance Requirements	Supplemental Information
VERTICAL SYSTEM (cont)		
Trace Shift as VAR VOLTS/DIV is Rotated		1.0 division or less.
Inverted Trace Shift		Less than 2 divisions when switching from noninverted to inverted.
Input Gate Current		
+20°C to +30°C		0.5 nA or less (0.1 division at 5 mV per division.
−15°C to +55°C		4 nA or less (0.8 division at 5 mV per division.
Channel Isolation		At least 100:1 at 25 MHz.
Position Range		At least +12 and −12 divisions from graticule center.
Chopped Mode Repetition Rate	Approximately 500 kHz.	Within 20%.
Input R and C		
Resistance	1 MΩ.	Within 2%.
Capacitance		Approximately 20 pF.
R and C Product (+20°C to +30°C)		Aberrations 2% or less using a P6105 probe.
Maximum Input Voltage		
DC Coupled	250 V (dc + peak ac). 500 V (p-p ac at 1 kHz or less).	
AC Coupled	250 V (dc + peak ac). 500 V (p-p ac at 1 kHz or less).	
Cascaded Operation		CH 1 VERT SIGNAL OUT into CH 2 input; AC coupled; using 50 Ω, 42-inch, RG 58 C/U cable terminated in 50 Ω at CH 2 input.
Bandwidth	Dc to at least 50 MHz.	
Sensitivity	At least 1 mV per division	

http://manoman.sqhill.com

Table 1-1 (cont)

Characteristics	Performance Requirements	Supplemental Information
	TRIGGER SYSTEM	
Sensitivity		When in EXT/10, multiply performance requirement by 10.
AC Coupled Signal	0.3 division internal or 50 mV external from 30 Hz to 10 MHz, increasing to 1.5 divisions internal or 150 mV external at 100 MHz.	
LF REJ Coupled Signal	0.5 division internal or 100 mV external from 50 kHz to 10 MHz, increasing to 1.5 divisions internal or 300 mV external at 100 MHz.	Attenuates signals below about 50 kHz.
HF REJ Coupled Signal	0.5 division internal or 100 mV external from 30 Hz to 50 kHz.	Attenuates signals above about 50 kHz.
DC Coupled Signal	0.3 division internal or 50 mV external from dc to 10 MHz, increasing to 1.5 divisions internal or 150 mV external at 100 MHz.	
Trigger Jitter	0.5 ns or less at 100 MHz at 2 ns per division with X10 MAG depressed.	
External Trigger Inputs		
Maximum Input Voltage	250 V (dc + peak ac). 250 V (p-p ac at 1 kHz or less).	
Input Resistance	1 MΩ	Within 10%.
Input Capacitance		Approximately 20 pF, within 10%.
LEVEL Control Range		
EXT	At least +2 and −2 V; 4 V p-p.	
EXT/10	At least +20 and −20 V; 40 V p-p.	
Trigger View (A TRIGGER)		
Deflection Factor		DC trigger COUPLING only; checked with 1 kHz signal.
EXT	100 mV per division ±5%.	
EXT/10	1 V per division ±5%.	
Rise Time	5 ns or less	20 MHz BW LIMIT at full bandwidth (button out).

http://manoman.sqhill.com

Table 1-1 (cont)

Characteristics	Performance Requirements		Supplemental Information
TRIGGER SYSTEM (cont)			
Delay Difference	⩽±0.15 division (⩽±300 ps at 2 ns per division).		With a 5-division signal having a 5-ns rise time or less from a 25 Ω source, centered vertically, with equal 50 Ω cable lengths from signal sources to vertical channel and external trigger inputs terminated in 50 Ω at each input.
Centering of Trigger Point			Within 1.0 division of center screen.
Flatness and Aberrations			+10%, −10%, 10% p-p.
HORIZONTAL DEFLECTION SYSTEM			
Sweep Rate			
Calibrated Range			
A Sweep	0.5 s per division to 0.02 μs per division in 23 steps in a 1-2-5 sequence. X10 MAG extends maximum sweep rate to 2 ns per division.		
B Sweep	50 ms per division to 0.02 μs per division in 20 steps in a 1-2-5 sequence. X10 MAG extends maximum sweep rate to 2 ns per division.		
Accuracy	**Unmagnified**	**Magnified**	Accuracy specification applies over the full 10 divisions.
+20°C to +30°C	Within ±2%.	Within ±3%.	When in X10 MAG, exclude first and last 50 ns of the sweep on 2-ns, 5-ns, 10-ns, and 20-ns sweep rates.
−15°C to +55°C	Within ±3%.	Within ±4%.	
Two-Division Linearity Check			±5% over any two-division (or less) portion of the full 10 divisions. When in X10 MAG, exclude first and last magnified divisions when checking 2-ns, 5-ns, and 10-ns per division rates.
Alternate Sweep Trace Separation			⩾±4 divisions.
Variable Range (A Only)	Continuously variable between calibrated settings. Extends slowest A Sweep rate to at least 1.25 s per division.		At least 2.5:1.
Sweep Length (A Only)			10.5 to 11.5 divisions.

http://manoman.sqhill.com

Table 1-1 (cont)

Characteristics	Performance Requirements		Supplemental Information
HORIZONTAL DEFLECTION SYSTEM (cont)			
A Trigger Holdoff Variable	Increases A Sweep holdoff time by at least a factor of 10.		
X10 Magnifier Registration			Within 0.2 division from graticule center (X10 MAG on to X10 MAG off).
Position Range			Start of sweep must position to right of graticule center. End of sweep must position to left of graticule center.
Differential Time Measurement Accuracy	**For Measurements of ⩾1 Major Dial Division**	**For Measurements of <1 Major Dial Division**	With the A TIME/DIV switch at 0.5 μs and 0.2 μs the differential time measurement accuracy limit is valid only for DELAY TIME POSITION dial settings between 1.50 and 8.50.
+15°C to +35°C	Within ±1%.	Within ±0.01 major dial division.	
−15°C to +55°C	Within ±2.5%.	Within ±0.03 major dial division.	
Delay Time Jitter	One part (or less) in 50,000 (0.002%) of ten times the A TIME/DIV switch setting, when operating on power-line frequencies other than 50 Hz. One part (or less) in 20,000 (0.005%) of A TIME/DIV switch setting, when operating on 50 Hz power-line frequency.		
Calibrated Delay Time	Continuous from 0.2 μs to at least 5 seconds after start of the delaying (A) sweep.		With VAR control in calibrated detent.
X-Y Operation			With TIME/DIV switch set to extreme counterclockwise position.
X-Axis			
Deflection Factor	Same as vertical channel.		With X10 MAG off.
Bandwidth	Dc to at least 4 MHz.		10-division reference signal.
Variable Range	Continuously variable between settings. Extends deflection factor to at least 12.5 V per division.		

http://manoman.sqhill.com

Table 1-1 (cont)

Characteristics	Performance Requirements	Supplemental Information
HORIZONTAL DEFLECTION SYSTEM (cont)		
X-Y Operation (cont)		
Input R and C		
Resistance	1 MΩ.	Within 2%.
Capacitance	Approximately 20 pF.	Within 3%.
Maximum Usable Input Voltage		
DC Coupled	250 V (dc + peak ac). 500 V (p-p ac at 1 kHz or less).	
AC Coupled	250 V (dc + peak ac). 500 V (p-p ac at 1 kHz or less).	
Phase Difference Between X and Y Axis Amplifiers		Within 3°, from dc to 50 kHz.
Deflection Accuracy	Within ±4%.	
CALIBRATOR		
Output Voltage (0°C to +40°C) (−15°C to +55°C)	0.3 V, within 1%.	 0.3 V, within 1.5%.
Repetition Rate	Approximately 1 kHz.	Within 25%.
Output Resistance		Approximately 10.3 Ω.
Output Current		
+20°C to +30°C	30 mA, within 2%.	
−15°C to +55°C		30 mA, within 2.5%.
Z-AXIS INPUT		
Sensitivity	5-volt p-p signal causes noticeable modulation at normal intensity.	Positive-going signal decreases intensity.
Usable Frequency Range	Dc to 50 MHz.	
Maximum Input Voltage		25 V (dc + peak ac).

http://manoman.sqhill.com

Table 1-1 (cont)

Characteristics	Performance Requirements	Supplemental Information
	SIGNAL OUTPUTS	
Channel 1 Output		
Voltage	At least 50 mV per division into 1 MΩ. At least 25 mV per division into 50 Ω.	
Resistance		Approximately 50 Ω.
Bandwidth	Dc to at least 50 MHz into 50 Ω.	
A and B Gates Output Resistance		Approximately 500 Ω.
	POWER SOURCE	
Line Voltage Ranges		
115 V Nominal		
(High)	108V to 132 V.	
(Medium)	104 V to 126 V.	
(Low)	99 V to 121 V.	
230 V Nominal		
(High)	216 V to 250 V.	
(Medium)	208 V to 250 V.	
(Low)	198 V to 242 V.	
Line Frequency	48 Hz to 440 Hz.	
Power Consumption		
Typical	65 W at 115 V, 60 Hz, medium range.	
Maximum	85 W at 115 V, 60 Hz, medium range.	
	CATHODE-RAY TUBE	
Display Area	8 X 10 cm.	
Geometry		0.1 division or less of tilt or bowing.
Trace Rotation Range		Adequate to align trace with horizontal center line.

http://manoman.sqhill.com

Table 1-1 (cont)

Characteristics	Performance Requirements	Supplemental Information
CATHODE-RAY TUBE (cont)		
Raster Distortion		0.1 division or less.
Standard Phosphor	P31.	
Optional Phosphor	P11.	
Nominal Accelerating Potential		≈18,500 V.
DM44		
Dc Voltage		
Ranges	0 to 1.2 kV in 5 steps: 200 mV, 2 V, 20 V, 200 V, and 1.2 kV.	
Resolution	100 μV.	
Accuracy	Within 0.1% of reading, ±1 count.	
Input Resistance	10 MΩ, all ranges (user has option to remove an internal wire strap to increase input resistance to 1000 MΩ on the 200 mV and 2 V ranges).	
Rejection Ratio		
Normal Mode	At least 60 dB at 50 and 60 Hz.	
Common Mode	At least 100 dB at dc; 80 dB at 50 and 60 Hz.	
Recycle Time	Approximately 3.3 measurements per second.	
Response Time	Within 0.5 second.	
Temperature Dependence	45 parts/million/°C.	
Maximum Safe Input Voltage, All Ranges	±1200 V (dc + peak ac) between + and COM inputs or between + input and chassis.	
COM (Common) Floating Voltage	±500 V (dc + peak ac) to chassis.	
Resistance		
Ranges	0 to 20 MΩ in six steps: 200 Ω, 2 kΩ, 20 kΩ, 200 kΩ, 2 MΩ, and 20 MΩ.	
Resolution	0.1 Ω.	

http://manoman.sqhill.com

Table 1-1 (cont)

Characteristics	Performance Requirements	Supplemental Information
	DM44 (cont)	
Accuracy		
200 Ω and 2 kΩ Ranges	Within 0.25% ±1 count, + probe resistance.	
20 kΩ, 200 kΩ, and 2 MΩ Ranges	Within 0.25%, ±1 count.	
20 MΩ Range	Within 0.30%, ±1 count.	
Recycle Time	Approximately 3.3 measurements per second.	
Response Time		
200 Ω through 200 kΩ Ranges	Within 1 second.	
2 MΩ and 20 MΩ Ranges	Within 5 seconds.	
Maximum Safe Input Voltage	120 V rms between + and COM inputs for an indefinite time.	220 V rms between + and COM inputs for 1 minute or less.
Temperature Dependence		
20 kΩ through 2 MΩ		250 parts/million/°C.
200 Ω, 2 kΩ, and 20 MΩ Ranges		350 parts/million/°C.
Approximate current supplied to unknown resistance		Ω Range / Current: 200 Ω and 2 kΩ — 1 mA; 20 kΩ — 100 μA; 200 kΩ — 10 μA; 2 MΩ — 1 μA; 20 MΩ — 100 nA
Temperature		
Range	−55°C to +150°C in one range.	
Accuracy (with constant temperature and infinite heat source)	Ambient Temperature (°C) / Probe Tip Temperature (°C) / Accuracy (°C)	
Probe Calibrated to DM44	+15 to +35 / −55 to +150 / ±2	
	−15 to +55 / −55 to +125 / ±3	
	−15 to +55 / +125 to +150 / ±4	
Probe Not Calibrated to DM44	+15 to +35 / −55 to +150 / ±6	
	−15 to +55 / −55 to +150 / ±8	

http://manoman.sqhill.com

Table 1-1 (cont)

Characteristics	Performance Requirements	Supplemental Information
	DM44 (cont)	
Time (Differential Delay)		
Accuracy		
+15°C to +35°C	Within 1% of reading, ±1 count.	
−15°C to +55°C	Within 2.5%, ±1 count.	
1/TIME		
Accuracy		
+15°C to +35°C	Within 2% of reading, ±1 count.	
−15°C to +55°C	Within 3.5%, ±1 count.	

Table 1-2

ENVIRONMENTAL CHARACTERISTICS

Characteristics	Description
	NOTE: All of the following tests meet the requirements of MIL-T-28800B, Type III Class 3, Style D equipment.
Temperature	
Operating	−15°C to +55°C.
Non-operating	−62°C to +85°C.
Altitude	
Operating	To 15,000 ft.
Non-operating	To 15,000 m (50,000 ft).
Humidity (Operating and Non-operating)	Five cycles (120 hr) referenced to MIL-T-28800B, para 3.9.2.2. 95% to 97% relative humidity.
Vibration (Operating)	15 minutes along each of three major axes at a total displacement of 0.025 inch p-p (4 g at 55 Hz) with frequency varied from 10 Hz to 55 Hz to 10 Hz in one minute sweeps. After sweep vibration in each axis, frequency held steady at each major resonance for 10 minutes, or if no such resonances found, held at 55 Hz for 10 minutes.
Shock (Operating and Non-operating)	30 g, half-sine, 11-ms duration, 3 shocks per axis each direction, for a total of 18 shocks.
EMI	Meets MIL-STD-461A/462.

http://manoman.sqhill.com

Table 1-3

PHYSICAL CHARACTERISTICS

Characteristics	Description
Weight	
With Panel Cover, Accessories, and Accessory Pouch	11.5 kg (25.3 lb).
Without Panel Cover, Accessories and Accessory Pouch	10.4 kg (22.8 lb).
Domestic Shipping Weight	14.9 kg (32.7 lb).
Export Shipping Weight	Approximately 22 kg (48 lb).
Height	
With Feet and Pouch	19.1 cm (7.5 in).
Without Pouch	15.7 cm (6.2 in).
Width	
With Handle	32.8 cm (12.9 in).
Without Handle	29.2 cm (11.5 in).
Depth	
Including Panel Cover	46.0 cm (18.1 in).
With Handle Extended	51.6 cm (20.3 in).

http://manoman.sqhill.com

OPERATING INSTRUCTIONS

This section of the manual provides information on instrument installation and power requirements and describes the functions of controls, connectors, and indicators. In addition, it includes procedures intended to familiarize the operator with obtaining basic oscilloscope displays. For more complete operating information, refer to 465B/DM44 Operators Manual.

INSTALLATION

The 465B is shipped in its carton with the standard accessories listed on the Accessories tab page at the end of this manual. At installation time, save the shipping carton and packaging materials for repackaging. Refer to the Maintenance section of this manual for repackaging information.

PREPARATION FOR USE

Safety Considerations

CAUTION

This instrument may be damaged if operated with the Line Voltage Selector switch or the Regulating Range Selector bar set for the wrong applied line voltage or if the wrong line fuse is used.

Refer to the Safety Summary in the front of this manual for power source, grounding, and other safety considerations pertaining to use of the instrument. Before connecting the instrument to a power source, verify that the Line Voltage Selector switch and the Regulating Range Selector bar are both set for the line voltage being used, that the proper line fuse is installed, and that the line cord plug matches the power source to be used.

The 465B is designed to be used with a three-wire ac power system. If a three-to-two wire adapter is used to connect this instrument to a two-wire ac power system, be sure to connect the ground lead of the adapter to earth (ground). Failure to complete the ground system may allow the chassis of this instrument to be elevated above ground potential, thus posing a shock hazard.

Line Voltage Selection

WARNING

This instrument is designed for operation from a power source with its neutral at or near earth (ground) potential with a separate safety-earth conductor.

This instrument operates from either a 115-volt or a 230-volt nominal line voltage source at 48 hertz to 440 hertz. To convert the instrument for operation from one line voltage range to the other, move the Line Voltage Selector switch located on the right side panel to the position indicating the correct nominal voltage.

The power cord plug may require replacement with a type matching the power source. If necessary, change the line cord plug. Refer to Table 2-1 for power cord conductor identification and to Figure 2-1 for illustrations of commonly-used power plugs.

Table 2-1

POWER CORD CONDUCTOR IDENTIFICATION

Conductor	Color	Alternate Color
Ungrounded (Line)	Brown	Black
Grounded (Neutral)	Blue	White
Grounding (Earthing)	Green-Yellow	Green-Yellow

http://manoman.sqhill.com

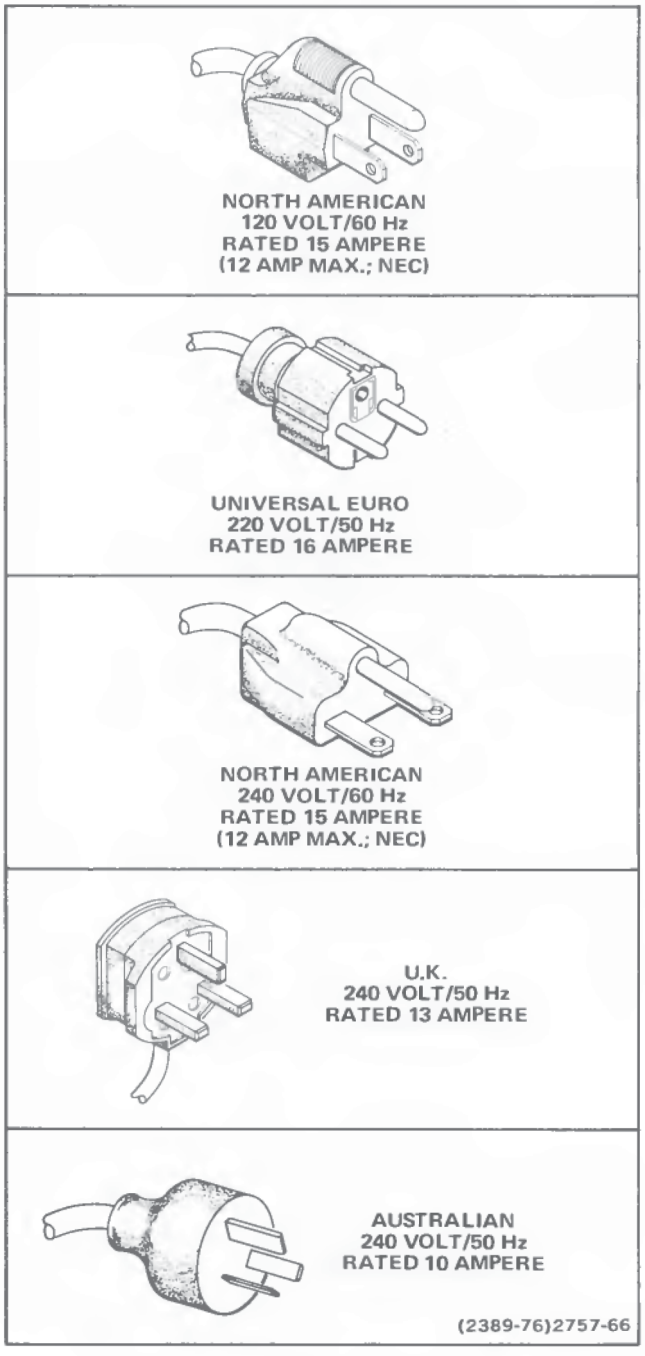

Figure 2-1. Commonly used power plugs.

Regulating Range Selection

The Regulating Range Selector assembly located on the rear panel contains the Regulating Range Selector bar and the line fuse. Verify that the selector bar is set for the average line voltage being used and that the proper line fuse is installed. To change the regulating range:

1. Disconnect the instrument from its power source.

2. Loosen the two captive screws that hold the cover on the selector assembly; then pull to remove the cover.

3. Pull out the selector bar (see Figure 2-2). Select a range from Table 2-2 centered about the average line voltage and plug the selector bar into the desired position.

4. Insert the proper fuse (selected from Table 2-3) into its holder.

5. Gently push the cover on and tighten the captive screws.

6. Before applying power to the instrument, verify that the Line Voltage Selector switch and the indicating tab on the Regulating Range Selector assembly are in their correct positions for the desired nominal line voltage and regulating range.

Table 2-2

REGULATING RANGE

Regulating Range Selector Bar Position	Regulating Range	
	115-Volt Nominal	230-Volt Nominal
Upper Holes	108 to 132 volts	216 to 250 volts
Middle Holes	104 to 126 volts	208 to 250 volts
Lower Holes	99 to 121 volts	198 to 242 volts

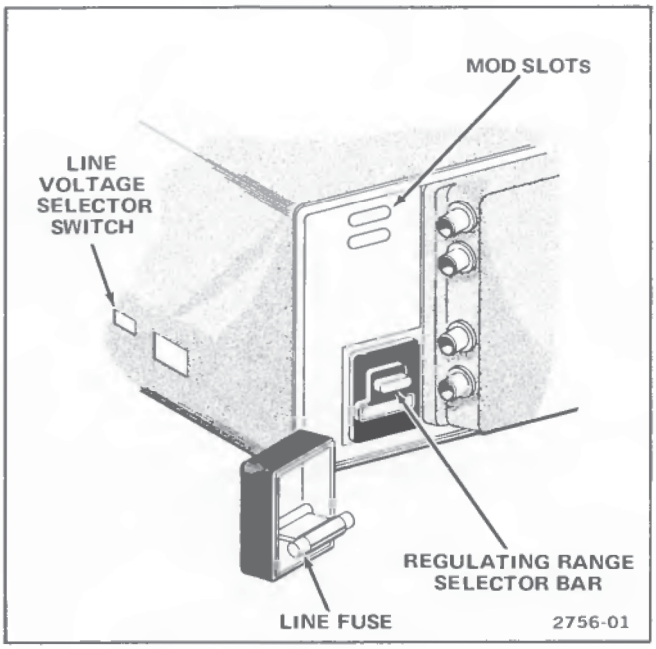

Figure 2-2. Regulating range selector and line fuse.

http://manoman.sqhill.com

Table 2-3

FUSE SELECTION

Line Voltage Selector Switch Position	Fuse Size
115-Volt Nominal	1.5 A, 3AG, Fast-blow
230-Volt Nominal	0.75 A, 3AG, Fast-blow

Instrument Cooling

To maintain adequate instrument cooling, the ventilation holes in the equipment cabinet must remain open, and the air filter must be cleaned or replaced when it gets dirty.

Rackmounting

For rackmounting details refer to the rackmounting installation instructions at the end of this section.

CONTROLS, CONNECTORS, AND INDICATORS

The major controls, connectors, and indicators for operation of the 465B are located on the front panel of the instrument. A few auxiliary functions are provided on the rear panel. Figures 2-3 through 2-7 show the front and rear panels of the instrument with the controls, connectors, and indicators called out. The circled numbers correspond to the discussions about particular controls, connectors, and indicators. If your instrument is equipped with a DM44 Digital Multimeter, refer to either the 465B/DM44 Operators Manual or the DM44 Service Manual for descriptions of DM44 controls, connectors, and indicators.

VERTICAL

Refer to Figure 2-3 for location of items 1 through 11.

(1) **VOLTS/DIV Switches**—Select the vertical deflection factor for Channel 1 and Channel 2 in a 1-2-5 sequence. VAR control must be in the calibrated detent to obtain a calibrated deflection factor.

(2) **VOLTS/DIV Readouts**—Consist of two light emitting diodes (LED) for each channel, located beneath the skirt of each VOLTS/DIV knob. One LED or the other will light to indicate the correct deflection factor. The 10X LED is illuminated only when a 10X probe with a scale-switching coding-ring contact is connected to the input of the oscilloscope; otherwise, the 1X LED is illuminated.

(3) **VAR**—Provides continuously variable uncalibrated deflection factors between the calibrated settings of the VOLTS/DIV switches.

(4) **UNCAL Indicator**—A LED that lights when the VAR VOLTS/DIV control is out of the calibrated detent, and the vertical deflection factor is uncalibrated.

(5) **POSITION Controls**—Determine the vertical position of the display on the crt. In the X-Y mode, the Channel 2 POSITION control moves the display vertically (Y-axis), and the Horizontal POSITION control moves the display horizontally (X-axis).

(6) **CH 1 OR X and CH 2 OR Y bnc Connectors**—Provide for application of external signals to the inputs of the vertical amplifier. In the X-Y mode, the signal connected to the CH 1 OR X connector provides horizontal deflection, and the signal connected to the CH 2 OR Y connector provides vertical deflection. These connectors each include a coding ring that activates the scale-factor-switching circuit whenever a 10X scale-factor-switching probe is connected.

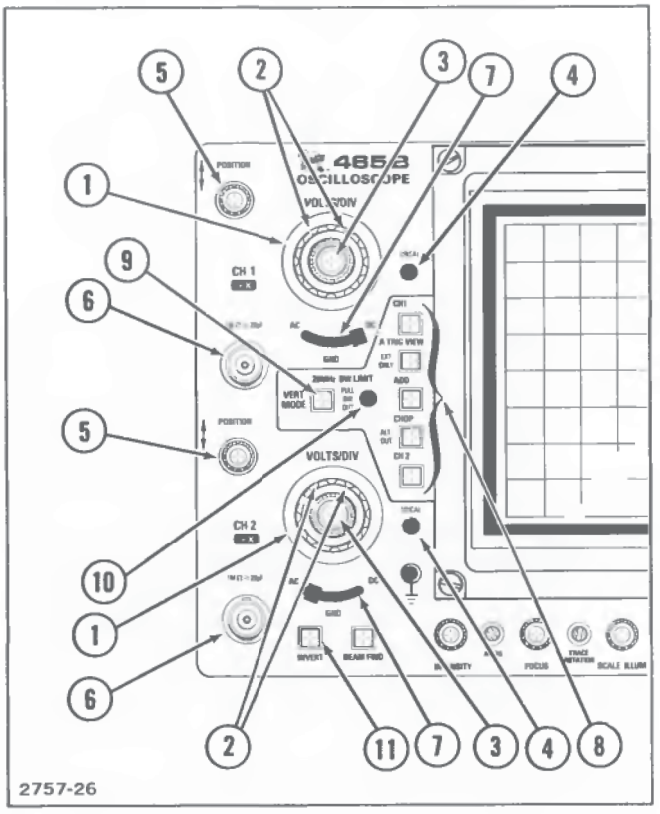

Figure 2-3. Vertical controls, connectors, and indicators.

http://manoman.sqhill.com

(7) **AC-GND-DC Switch**—Selects the method used to couple a signal to the input of the vertical amplifier.

AC position—Signals are capacitively coupled to the vertical amplifier. The dc component of the input signal is blocked.

GND position—The input of the vertical amplifier is grounded to provide a ground reference and to allow the input coupling capacitor to precharge.

DC position—All frequency components of the input signal are passed to the vertical input amplifier.

(8) **VERT MODE Switches**—Select mode of operation for vertical amplifier system. When either CHOP or ALT mode is selected, display of any combination of CH 1, CH 2, ADD, and A TRIG VIEW (EXT ONLY) is allowed. When all buttons are out, a single trace will be displayed, provided that either TRIG MODE is in AUTO or TRIG MODE is in NORM with a triggerable signal applied to a vertical input connector. This trace will not display intelligence and is unaffected by position controls.

NOTE

Four display traces may simultaneously be observed on the 465B crt. Each VERT MODE push button must be depressed and released a second time to remove the signal from the corresponding displays.

CH 1—Displays Channel 1 signals when pushbutton is pressed in.

A TRIG VIEW—Displays the A external trigger input signal when push button is pressed in and when the A TRIGGER SOURCE switch is set to EXT or EXT/10.

ADD—Displays the algebraic sum of the Channel 1 and Channel 2 input signals when ADD push button is pressed in. The INVERT switch in Channel 2 allows the display to be either CH 1 plus CH 2 or CH 1 minus CH 2. The ADD capability is useful for common-mode rejection to remove an undesired signal or dc offset.

CHOP ALT: OUT—The 465B "chops" (switches) between two or more of the display modes at a 500-kHz rate when CHOP ALT: OUT button is pressed in. When released, the 465B "alternates" between two or more of the four display modes at the end of each trace sweep. CHOP and ALT functions are disabled if only one VERT MODE push button (CH 1, CH 2, ADD, or A TRIG VIEW) is selected or if the X-Y mode is selected.

CH 2—Displays Channel 2 signals when push button is pressed in.

(9) **20 MHz BW LIMIT (FULL BW OUT) Switch**—Limits the bandwidth of the vertical amplifier to approximately 20 MHz when pressed in. Push button must be depressed and released a second time to regain full 100-MHz bandwidth operation.

(10) **20 MHz BW LIMIT Indicator**—This LED is illuminated whenever the 20 MHz BW LIMIT push button is pressed in, and bandwidth is limited to 20 MHz.

(11) **INVERT**—Inverts Channel 2 display when push button is pressed in. Push button must be depressed and released a second time to present a noninverted display.

DISPLAY AND CALIBRATOR

Refer to Figure 2-4 for location of items 12 through 19.

(12) **Internal Graticule**—Eliminates parallax. Risetime and amplitude measurement points are indicated at the left edge of the graticule.

(13) **BEAM FIND Switch**—Compresses the display to within the graticule area and provides a visible viewing intensity to aid in locating off-screen displays.

(14) **INTENSITY Control**—Determines overall brightness of the A Sweep and B Sweep crt displays. Interacts with B INTENSITY control on B Sweep crt displays.

(15) **FOCUS Control**—Adjusts for optimum display definition.

http://manoman.sqhill.com

(16) **CALIBRATOR Loop**—A combination 30-milliamp current loop and 0.3-volt square-wave voltage output (approximately 1 kilohertz) that permits the operator to compensate voltage probes and to check oscilloscope vertical operation. It is not intended to verify precise time-base calibration.

(17) **SCALE ILLUM Control**—Adjusts graticule illumination.

(18) **ASTIG Control**—Screwdriver control used in conjunction with the FOCUS control to obtain a well-defined display. It does not require readjustment during normal use of the instrument.

(19) **TRACE ROTATION Control**—Screwdriver control used to align trace with the horizontal graticule lines.

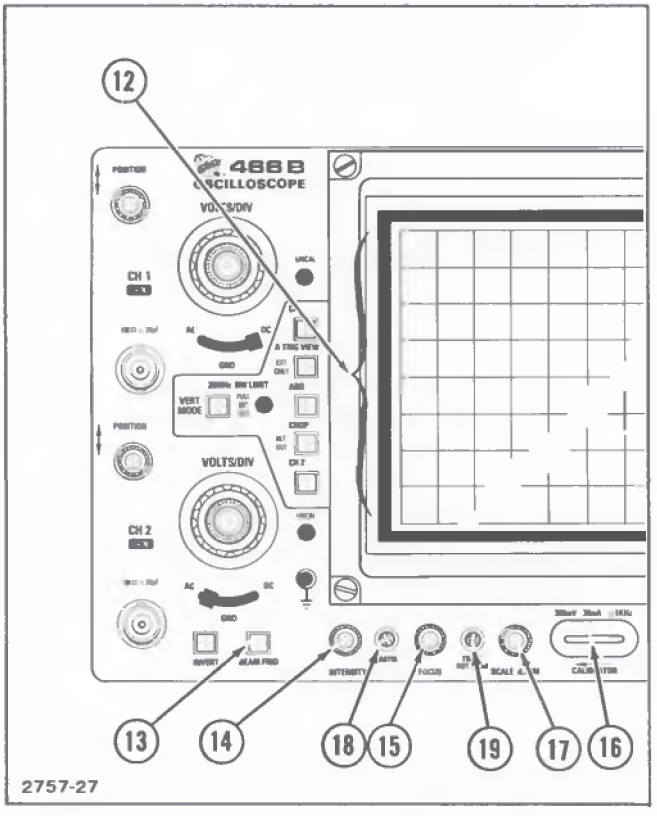

Figure 2-4. Display controls and calibrator.

TRIGGER (A and B where applicable)

Refer to Figure 2-5 for location of items 20 through 28.

(20) **TRIG MODE Switches**—Three push button switches determine the mode of trigger operation for the A Sweep.

AUTO—Sweep is initiated by the applied trigger signal. In the absence of an adequate trigger signal, or if the trigger repetition rate is less than about 20 hertz, the sweep free runs and provides a bright reference trace.

NORM—Sweep is initiated by the applied trigger signal. In the absence of an adequate trigger signal, there is no trace. When the trigger rate is too low for AUTO, use NORM.

SINGL SWP—When this push button is pressed, the A Sweep operates in the single-sweep mode. After a single sweep is displayed, further sweeps cannot be presented until the SINGL SWP push button is again pressed. SINGL SWP is useful in displaying and photographing either non-repetitive signals or signals that cause unstable conventional displays (e.g., signals that vary in amplitude, shape, or time).

(21) **READY Indicator**—LED illuminates to indicate that A Sweep is "armed" and will present a single-sweep display upon receipt of an adequate trigger signal.

(22) **TRIG Indicator**—LED illuminates to indicate that A Sweep is triggered and will produce a stable display. It is useful for setting up the trigger circuits when a trigger signal is available without a display on the crt (for example, when using external triggers).

(23) **A TRIGGER HOLDOFF Control**—Provides continuous control of time between sweeps. Allows triggering on aperiodic signals (such as complex digital words). In the fully clockwise position (B ENDS A), the A Sweep is automatically terminated at the end of the B Sweep to provide the fastest possible sweep repetition rate for delayed-sweep presentations and low-repetition rate signals. In this position, Holdoff is approximately ten times NORM. Use the A trigger controls for most stable triggering before setting the A TRIGGER HOLDOFF control to a position other than NORM.

http://manoman.sqhill.com

(24) **COUPLING Switch**—Determines method used to couple signals to the trigger generator circuit.

AC—Signals are capacitively coupled to the input of the trigger circuit. Dc is rejected, and signals below about 30 hertz are attenuated. Triggering is allowed only on the ac portion of the vertical signal.

LF REJ—Signals are capacitively coupled to the input of the trigger circuit. Dc is rejected, and signals below about 50 kilohertz are attenuated. It is useful for providing a stable display of the high-frequency components of a complex waveform.

HF REJ—Signals are capacitively coupled to the input of the trigger circuit. Dc is blocked, and signals below about 30 hertz and above 50 kilohertz are attenuated. It is useful for providing a stable display of the low-frequency components of a complex waveform.

DC—All frequency components of a trigger signal are coupled to the input of the trigger circuit. It is useful for providing a stable display of low-frequency or low-repetition rate signals.

(25) **SLOPE Switch**—Selects the slope of the signal that triggers the sweep.

+: Sweep can be triggered from the positive-going portion of a trigger signal.

−: Sweep can be triggered from the negative-going portion of a trigger signal.

(26) **LEVEL Control**—Selects the amplitude point on the trigger signal at which the sweep is triggered. It is usually adjusted for the desired display after trigger SOURCE, COUPLING, and SLOPE have been selected.

(27) **SOURCE Switch**—Determines the source of the trigger signal coupled to the input of the trigger circuit.

NORM—Trigger source is a sample of the signal displayed on the crt.

CH 1—A sample of the signal applied to the Channel 1 input is used as a trigger signal. Channel 2 signal is unstable if it is not time-related.

CH 2—A sample of the signal applied to the Channel 2 input is used as a trigger signal. Channel 1 crt display is unstable if it is not time-related.

LINE (A Trigger Circuit Only)—A sample of the power-line sinusoidal waveform is used as a trigger signal. It is useful when the input signal is time-related (multiple or submultiple) to the line frequency or when it is desirable to provide a stable display of a line-frequency component in a complex waveform.

EXT—Signals connected to the External Trigger input connectors are used for triggering. External signals must be time-related to the displayed signal for a stable display. It is useful when the internal signal is either too small or contains undesired signals that could cause unstable triggering. It is also useful when operating in the CHOP mode. EXT and EXT/10 trigger signals may be viewed on the crt by selecting A TRIG VIEW on the VERT MODE switch.

EXT/10 (A Trigger Circuit Only)—External trigger signal is attenuated by a factor of 10.

STARTS AFTER DELAY (B Trigger Circuit Only)—B Sweep starts immediately after the delay time selected by the DELAY TIME POSITION control and is independent of the B Trigger signal. When making differential time measurements, you must use this mode to obtain valid measurements. On instruments equipped with a DM44 you must use this mode to obtain valid measurements when using the TIME or 1/TIME functions.

(28) **External Trigger Input Bnc Connectors**—Connect external trigger input signals for A TRIGGER and B (DLY'D) TRIGGER circuits, when either EXT or EXT/10 (A Trigger only) SOURCE is selected.

http://manoman.sqhill.com

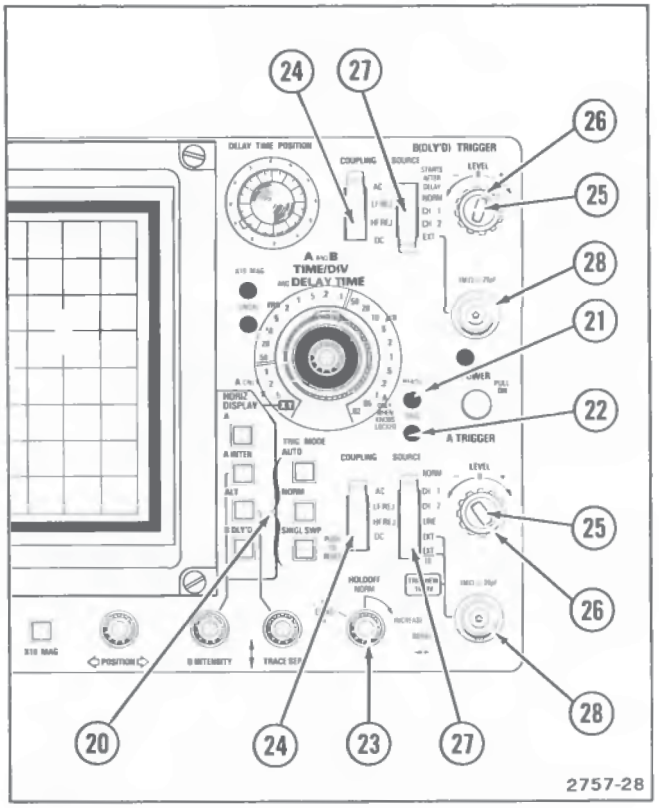

Figure 2-5. Trigger controls, connectors, and indicators.

HORIZONTAL AND POWER

Refer to Figure 2-6 for location of items 29 through 40.

(29) **A AND B TIME/DIV AND DELAY TIME Switches**—A TIME/DIV (clear plastic skirt) selects the sweep rate of the A Sweep circuit for A Sweep operation only. Also selects the basic delay time (used in conjunction with the DELAY TIME POSITION control) for delayed sweep operation. B TIME/DIV switch (pull out and rotate to unlock) selects the sweep rate for the B Sweep circuit for delayed sweep operation only. VAR control must be in the calibrated detent for calibrated A Sweep rates. When the A TIME/DIV switch is rotated fully counterclockwise to the X-Y position, the horizontal (X-axis) deflection is controlled by the Channel 1 input signal.

(30) **POSITION Control**—Positions the display horizontally for A Sweep and B Sweep, or on the X-axis (horizontally) in the X-Y mode. Provides both coarse and fine control action. Reverse the direction of rotation to actuate fine positioning action.

(31) **X10 MAG Switch**—When pressed in, increases displayed sweep rate by a factor of 10. Extends fastest sweep rate to 2 nanoseconds/division. The magnified sweep expands the center division of the unmagnified display (0.5 division either side of the center graticule line).

(32) **VAR Control**—Provides continuously variable sweep rates between the calibrated settings of the A TIME/DIV switch. It extends the slowest A Sweep rate to at least 1.25 seconds/division. The A Sweep rate is calibrated when the control is set fully clockwise to the calibrated detent. It must be in the detent position to make accurate differential time measurements. On instruments equipped with a DM44, the VAR control must be in the detent position to make accurate measurements in the TIME and 1/TIME functions.

(33) **UNCAL Indicator**—LED illuminates to indicate that the A Sweep rate is uncalibrated (VAR control is out of the calibrated detent).

(34) **X10 MAG Indicator**—LED illuminates to indicate that the X10 magnifier is on.

(35) **DELAY TIME POSITION Control**—Selects the amount of delay time between the start of A Sweep and start of B Sweep. Delay time is variable to at least 10 times the time indicated by the A TIME/DIV switch.

(36) **POWER Switch**—PULL ON turns instrument power on; button pushed in turns power off.

(37) **POWER ON Indicator**—LED illuminates when power is applied to the instrument.

(38) **HORIZ DISPLAY Switches**—Four push button switches determine the mode of operation for the horizontal deflection system.

A—Horizontal deflection is provided by A Sweep at a sweep rate determined by the setting of the A TIME/DIV switch. Only A Sweep is displayed; B Sweep is inoperative.

http://manoman.sqhill.com

A INTEN—Displays the A Sweep at a rate determined by the A TIME/DIV switch. An intensified portion can appear on the display during the B Sweep time. This switch position provides an indication of both the duration and position of the B Sweep (delayed sweep) with respect to the A Sweep (delaying sweep).

ALT—Alternates the displays between the A INTEN and B DLY'D Sweeps. In ALT operation, use TRACE SEP to vertically position B Trace; use B INTENSITY control to adjust B Trace intensity.

B DLY'D—Displays only the B Sweep. The B Sweep rate is determined by the B TIME/DIV switch, with the delay time determined by the setting of both the A TIME/DIV switch and the DELAY TIME POSITION control.

(39) **TRACE SEP Control**—Positions the B Sweep vertically when the ALT HORIZ DISPLAY mode is selected.

(40) **B INTENSITY Control**—Determines the intensity of the B Trace (interacts with INTENSITY control).

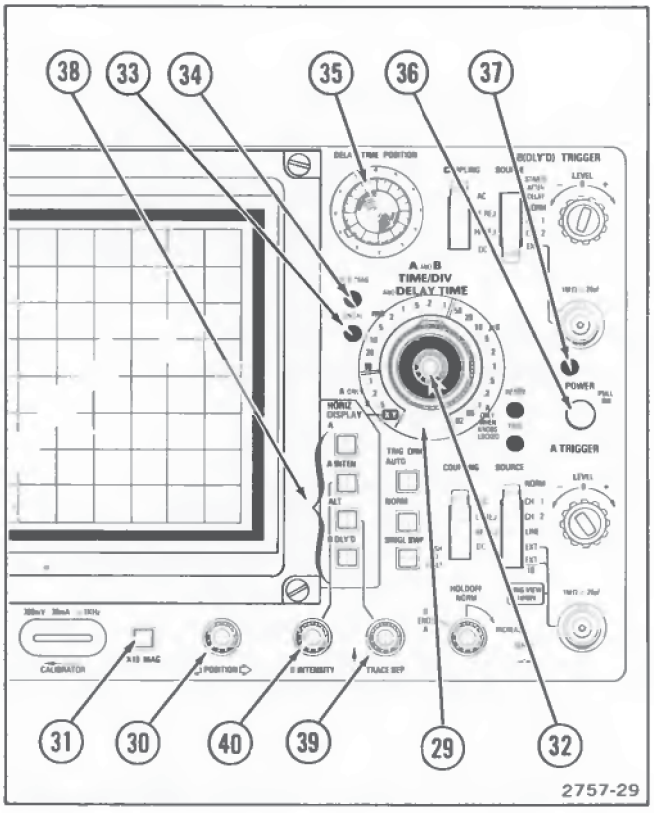

Figure 2-6. Horizontal and power connectors, controls, and indicators.

REAR PANEL

Refer to Figure 2-7 for location of items 41 through 50.

(41) **A +GATE**—Output bnc connector provides a positive-going pulse coincident with the A Sweep time.

(42) **B +GATE**—Output bnc connector provides a positive-going pulse coincident with the B Sweep time.

(43) **CH 1 VERT SIGNAL OUT**—Output bnc connector provides a sample of the signal applied to the Channel 1 preamplifier via the input connector.

(44) **EXT Z-AXIS**—Input bnc connector permits the application of an external signal to intensity modulate the crt display. Does not affect display wave-shape. Signals with fast rise time and fall time provide the most abrupt intensity change. Signals must be time-related to the display for a stable presentation on the crt. The connector is useful for adding time markers in uncalibrated modes of operation.

(45) **Regulating Range Selector Bar**—Selects the regulating range of the 465B power supplies to match the available power input source. It is shown on Figure 2-2 in the Medium regulating range. See Table 2-2 for change information.

(46) **Line Fuse Holder**—Contains the line fuse and the regulating range selector. See Table 2-3 for change information.

(47) **Line Cord**—Makes the connection between the oscilloscope and the power source. The cord may be conveniently stored by wrapping around the feet on rear panel.

(48) **MOD Slots**—A number in either slot indicates the instrument contains an option or other modification.

http://manoman.sqhill.com

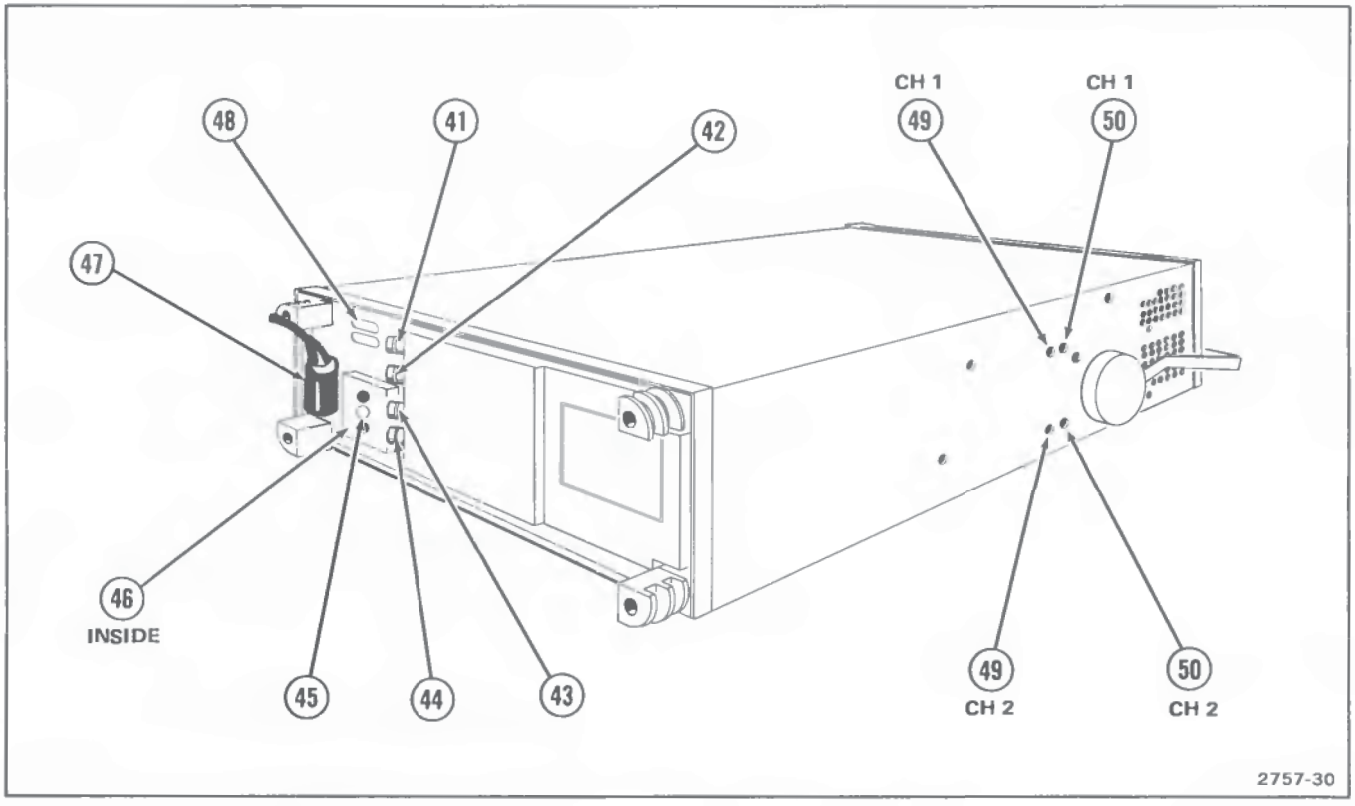

Figure 2-7. Rear panel and left side panel controls, connectors, and indicators.

LEFT SIDE PANEL

(49) **Vertical Gain Controls (accessible through left side panel)**—Screwdriver adjustments to set the gain of the vertical channels.

(50) **Variable Balance Controls (accessible through left side panel)**—Screwdriver adjustments to set balance of the vertical channels.

RIGHT SIDE PANEL

(51) **Line Voltage Selector Switch**—Selects either 115 volts or 230 volts nominal line voltage. Refer to Table 2-2 for ranges and to Figure 2-2 for location of the switch. Change the fuse to match the range selected.

BASIC OSCILLOSCOPE DISPLAYS

The procedures in this subsection will allow you to set up and operate your instrument to obtain the most commonly used basic oscilloscope displays. Before proceeding with these instructions, verify that the Line Voltage Selector switch and the Regulating Range Selector bar are placed in the proper positions and that the correct fuse is installed for the line voltage being used. Refer to the preceding Preparation for Use subsection for the information and procedures relating to line voltage, regulating range, and fuse selection. Verify that the POWER switch is off (push button pressed in) before plugging the power cord into the line voltage socket.

http://manoman.sqhill.com

PRESET INSTRUMENT CONTROLS

Preset the instrument controls as follows:

Vertical

VERT MODE	CH 1
VOLTS/DIV	Proper setting determined by amplitude of signal to be applied
VOLTS/DIV VAR	Calibrated detent
AC-GND-DC	AC
POSITION	Midrange
20 MHz BW LIMIT	Not limited (push button out)
INVERT	Off (push button out)

Display

INTENSITY	Fully counterclockwise
FOCUS	Midrange
SCALE ILLUM	Midrange

Horizontal

TIME/DIV Switches	Locked together at 1 ms
A TIME/DIV VAR	Calibrated detent
HORIZ DISPLAY	A
X10 MAG	Off (push button out)
POSITION	Midrange

Trigger
(Both A and B if applicable)

SLOPE	+
LEVEL	0
SOURCE	NORM
COUPLING	AC
TRIG MODE (A only)	AUTO
HOLDOFF	NORM

NORMAL SWEEP DISPLAY

1. Preset instrument controls and pull the POWER switch (on). After allowing the instrument to warm up, connect a signal to the CH 1 input connector.

NOTE

Instrument warmup time required to meet all specification accuracies is 20 minutes.

2. Adjust the INTENSITY control for the desired display brightness. If the display is not visible with the INTENSITY control at midrange, press the BEAM FIND push button and hold it in while adjusting the CH 1 VOLTS/DIV switch to reduce the vertical display size. Center the compressed display using the vertical and horizontal POSITION controls; release the BEAM FIND push button. Adjust the LEVEL control if necessary.

3. Set the CH 1 VOLTS/DIV switch and the vertical and horizontal POSITION controls to locate the display within the graticule area.

4. Adjust the A TRIGGER LEVEL control for a stable display.

5. Set the A TIME/DIV switch for the desired number of cycles of displayed signal; then adjust the FOCUS control as necessary.

MAGNIFIED SWEEP DISPLAY

1. Preset instrument controls and obtain a Normal Sweep Display.

2. Adjust the horizontal POSITION control to move the area to be magnified to within the center graticule division of the crt (0.5 division on each side of the center vertical graticule line). Change the TIME/DIV switch setting as desired.

3. Push the X10 MAG switch (on) and adjust the horizontal POSITION control for precise positioning of the magnified display. Divide the TIME/DIV setting by 10 to determine the magnified sweep rate.

DELAYED SWEEP DISPLAY

1. Preset instrument controls and obtain a Normal Display.

NOTE

Differential time measurements and measurements using the TIME or 1/TIME functions of the DM44 are invalid when the B TRIGGER SOURCE switch is not set to STARTS AFTER DELAY.

2. Set the HORIZ DISPLAY switch to A INTEN and the B TRIGGER SOURCE switch to STARTS AFTER DELAY.

http://manoman.sqhill.com

3. Pull out on the B TIME/DIV knob and turn clockwise from counterclockwise stop until the intensified zone is the desired length. Adjust the INTENSITY and B INTENSITY controls as needed to make the intensified zone distinguishable from the rest of the display. If your instrument is equipped with a DM44, select a function other than TIME or 1/TIME for a single delayed sweep.

4. Adjust the DELAY TIME POSITION control to move the intensified zone to cover the portion of the display that will be displayed in delayed form.

5. Set the HORIZ DISPLAY switch to B DLY'D. The intensified zone adjusted in steps 3 and 4 is now displayed in delayed form. The delayed sweep rate is indicated by the dot on the B TIME/DIV knob.

6. To obtain a delayed display with less jitter, set the B TRIGGER SOURCE switch to the same position as the A TRIGGER SOURCE switch and adjust the B TRIGGER LEVEL control for a stable display.

ALTERNATE SWEEP DISPLAY

1. Preset instrument controls and obtain a Normal Sweep Display.

2. Pull out on the B TIME/DIV knob to unlock it and turn clockwise to the desired sweep rate.

3. Set the HORIZ DISPLAY switch to ALT. Set B (DLY'D) TRIGGER SOURCE to STARTS AFTER DELAY. Adjust Channel 1 POSITION and TRACE SEP as required to display A Sweep above B Sweep. This will provide a display that alternates between A INTEN trace (upper) and B DLY'D trace (lower). Adjust B INTENSITY as necessary to view the B DLY'D trace.

4. The start of B Sweep may be changed by adjusting the DELAY TIME POSITION control.

5. If the instrument is equipped with a DM44 and a time difference (or period) measurement is desired, select the TIME function and adjust the Δ TIME control to move the time-measurement point with respect to the reference point.

6. The display now contains a second intensified zone on the A INTEN trace (upper) and a second signal, which may be partially or fully superimposed, on the B DLY'D trace (lower).

7. The DELAY TIME POSITION control will change the position of both delayed displays (reference and time measurement), while the Δ TIME control will position only the second (measurement point) delayed display.

SINGLE SWEEP DISPLAY

1. Preset instrument controls and obtain a Normal Sweep Display. For random signals, set the trigger circuit to trigger on a signal that is approximately the same amplitude and frequency as the random signal.

2. Press the SINGL SWP push button on the A TRIG MODE switch. The next trigger pulse starts the sweep and displays a single trace. If no triggers are present, the READY indicator should illuminate, indicating that the A Sweep Generator circuit is set and waiting for a trigger.

3. When the sweep is complete, the circuit is "locked out", and the READY indicator turns off.

4. Press the SINGL SWP push button again to prepare the circuit for another Single Sweep Display.

X-Y DISPLAY

1. Preset instrument controls and pull the POWER switch (on). Allow the instrument to warm up.

2. Set the A TIME/DIV switch fully counterclockwise to X-Y. Apply the vertical signal to the CH 2 OR Y input connector and the horizontal signal to the CH 1 OR X input connector.

3. Advance the INTENSITY control until the display is visible. If the display is not visible with the INTENSITY control at midrange, press and hold in the BEAM FIND push button while adjusting the CH 1 and CH 2 VOLTS/DIV switches until the display is reduced in size, both vertically and horizontally. Center the compressed display with the POSITION controls (Channel 2 POSITION control for vertical movement, and horizontal POSITION control for horizontal movement). Release the BEAM FIND push button. Adjust the FOCUS control for a well-defined display.

http://manoman.sqhill.com

RACKMOUNTING

The TEKTRONIX R465B Oscilloscope is designed to mount in a 19-inch rack. When mounted in accordance with the following mounting procedure, the instrument will meet all electrical and environmental characteristics given in Section 1 of this manual.

DIMENSIONS

Dimensional drawings of the R465B are shown in Figures 2-8 and 2-9.

Rack Height

At least seven inches of vertical space is required to mount this instrument in a rack.

Rack Width

Minimum width of the opening between the left and right front rails of the rack must be 17 5/8 inches. This allows room on each side of the instrument for the slide-out tracks to operate freely, permitting the instrument to move smoothly in and out of the rack.

Rack Depth

Total depth necessary to mount the R465B in a cabinet is 18 inches. This allows room for air circulation, power cord and signal connections and the necessary mounting hardware.

SLIDE-OUT TRACKS

The slide-out tracks provided with the R465B permit it to be extended out of the rack for maintenance or calibration without removing the instrument from the rack. In the fully extended position, the R465B can be tilted up so the bottom of the instrument can be reached for maintenance or calibration. To operate the R465B in the extended position, be sure the power cord and any interconnecting cables are long enough for this purpose.

The slide-out tracks consist of two assemblies—one for the left side of the instrument and one for the right side. Figure 2-10 shows the complete slide-out track assemblies. The stationary section of each assembly attaches to the front and rear rails of the rack, and the chassis section is attached to the instrument. The intermediate section slides between the stationary and chassis sections and allows the R465B to be extended out of the rack. When the instrument is shipped, the stationary and immediate sections of the tracks are packaged as matched sets and should not be separated. To identify the left or right assembly, note the position of the automatic latch (see Figure 2-10). When mounted in the rack, the automatic latch should be at the top of both assemblies. The chassis sections are installed on the instrument at the factory.

The hardware needed to mount the slide-out tracks is shown in Figure 2-11. Since the hardware supplied is intended to make the tracks compatible with a variety of cabinet racks and installation methods, not all of it will be needed for this installation. Use only the hardware that is required for the mounting method used.

http://manoman.sqhill.com

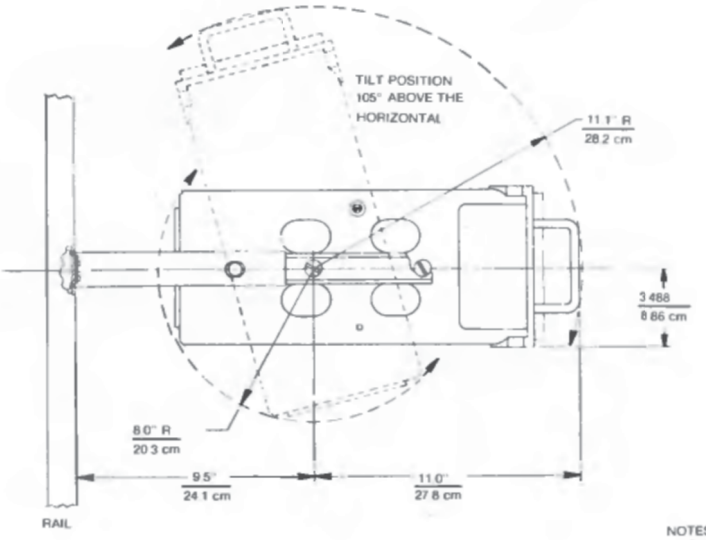

NOTES
1. ALL DIMENSIONS ARE REFERENCE DIMENSIONS EXCEPT AS NOTED

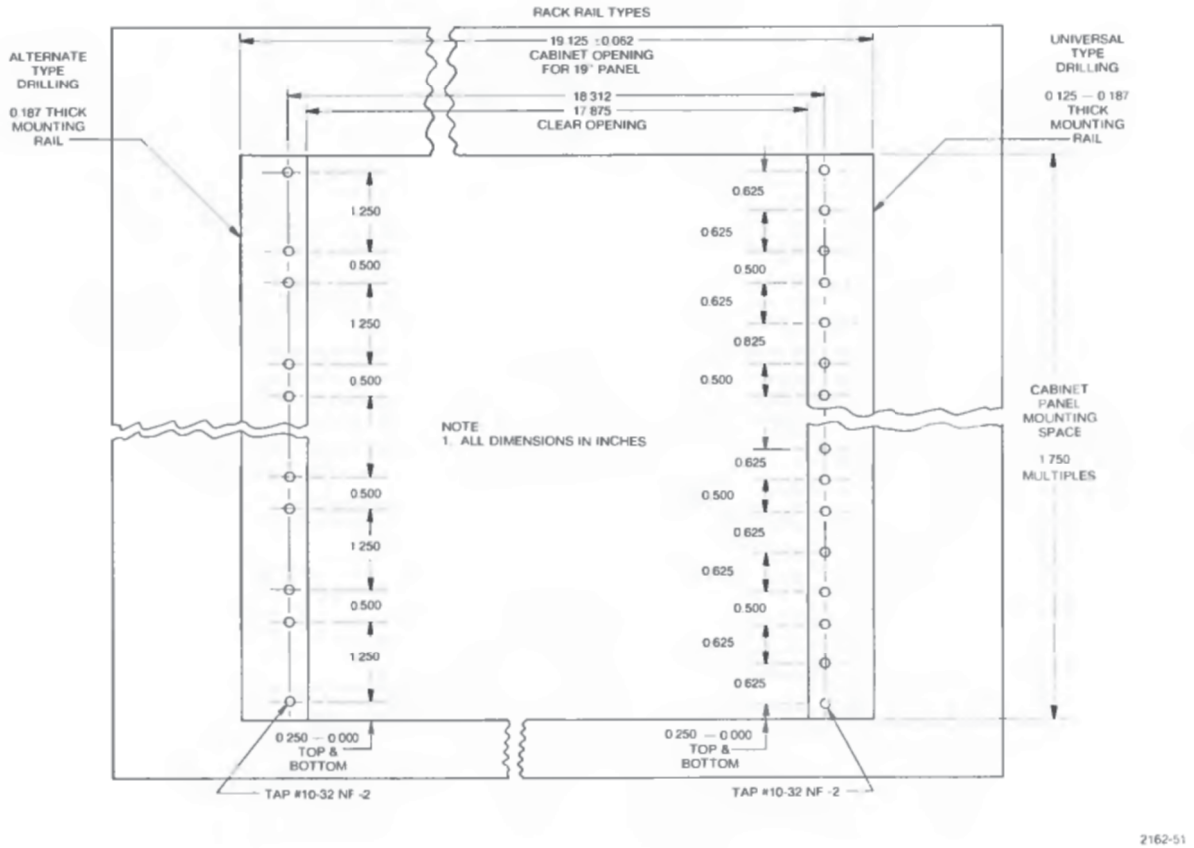

Figure 2-8. Dimensional drawing.

http://manoman.sqhill.com

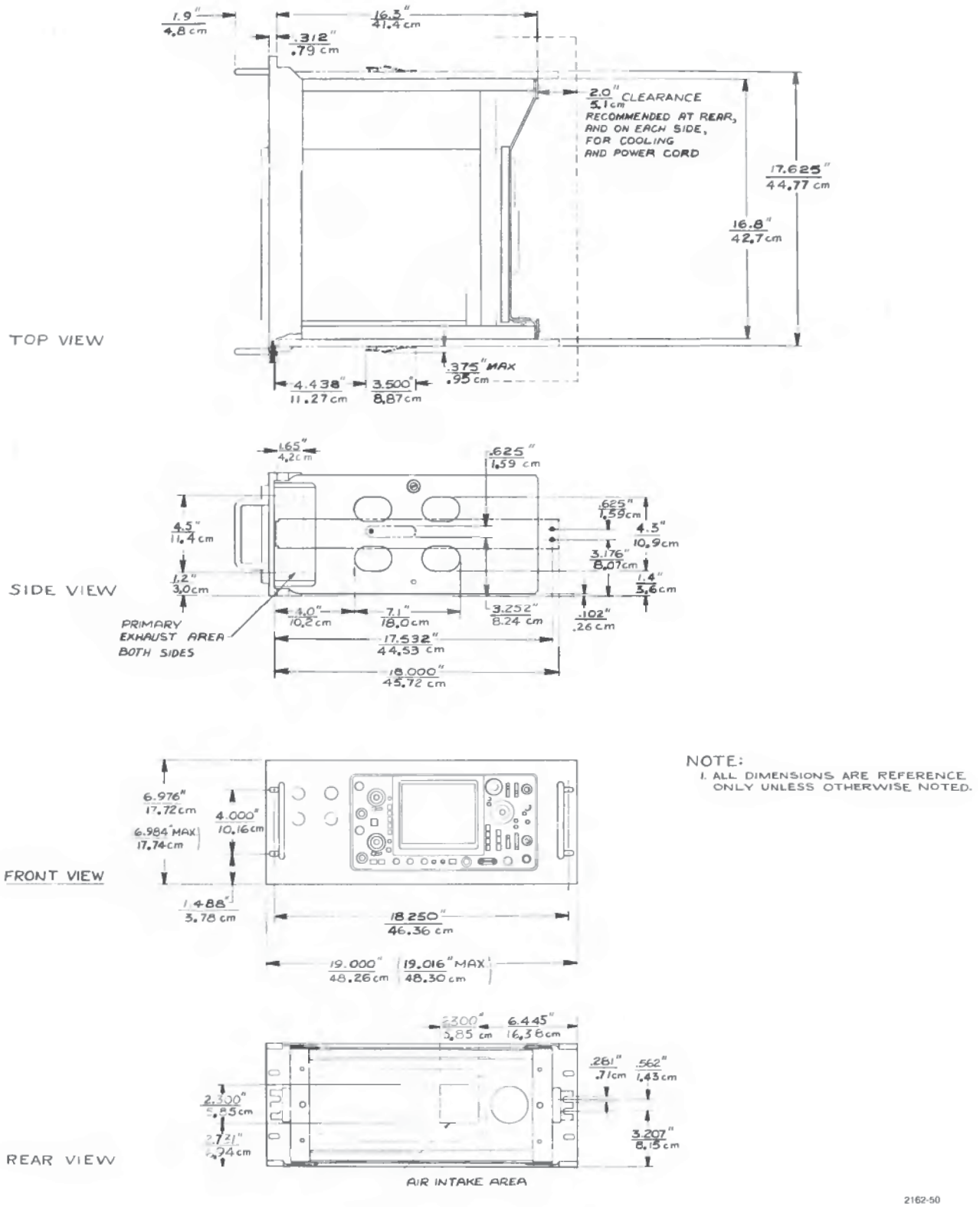

Figure 2-9. Dimensional drawing (cont).

http://manoman.sqhill.com

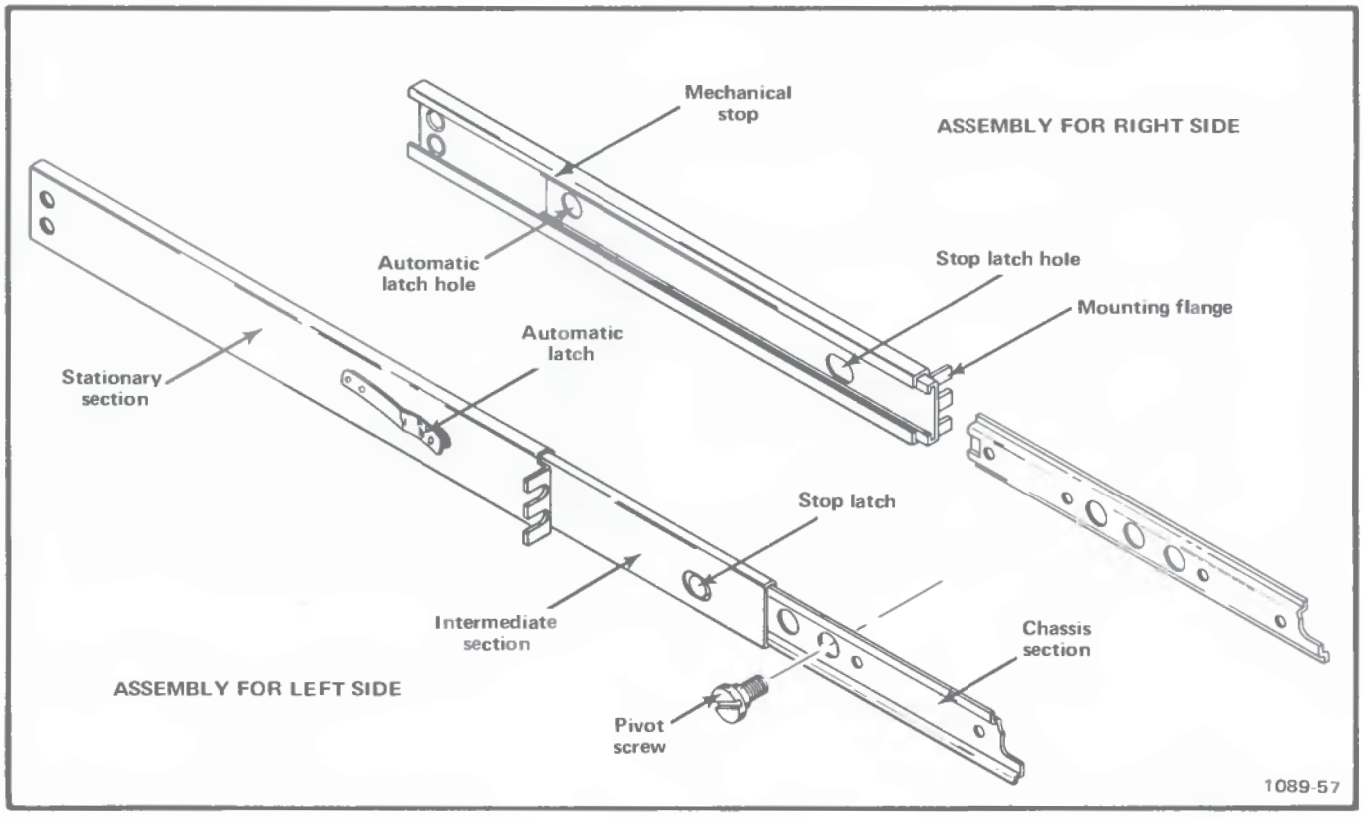

Figure 2-10. Slide-out track assemblies.

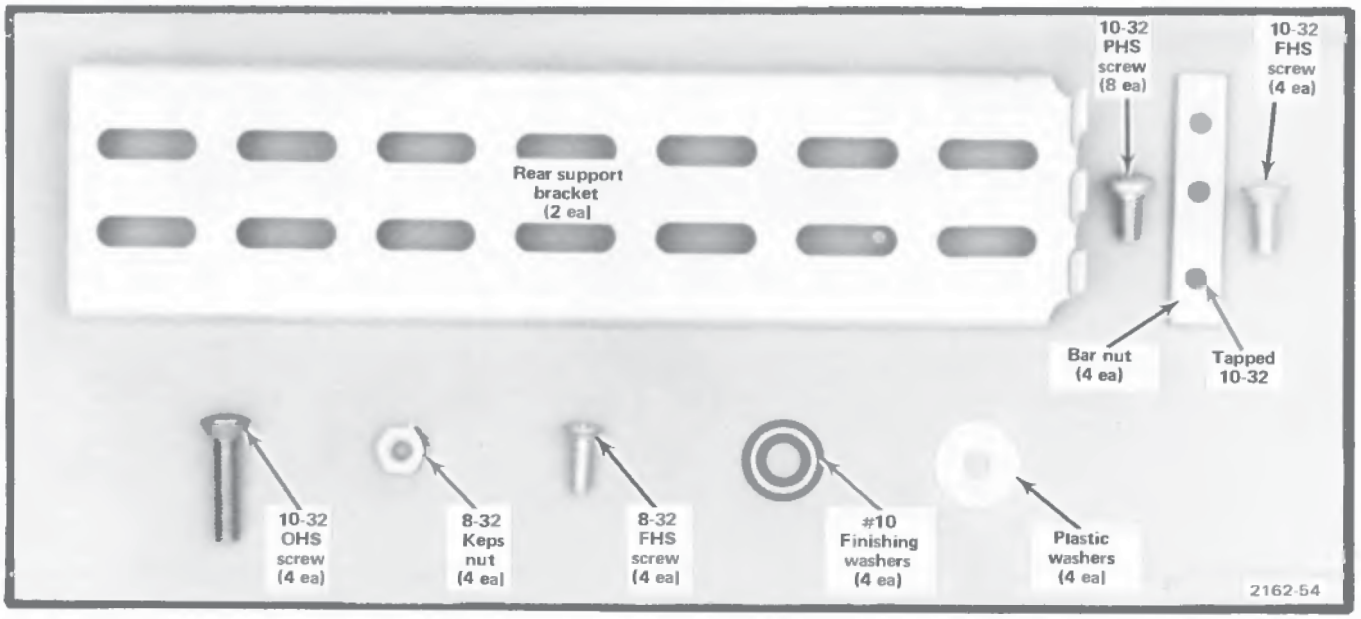

Figure 2-11. Hardware needed to mount the instrument in the cabinet rack.

http://manoman.sqhill.com

MOUNTING PROCEDURE

The following mounting procedure uses the rear support kit (see Figures 2-12 and 2-13) to meet the environmental characteristics of the instrument (shock and vibration). Two alternative mounting methods are described at the end of this procedure. However, when mounted according to these alternative methods, the instrument may not meet the given environmental characteristics for shock and vibration.

The mounting flanges of the stationary sections may be mounted in front of or behind the front rails of the rack depending on the type of rack. If the front rails of the rack are tapped for 10-32 screws, the mounting flanges are placed in front of the rails. If the front rails of the rack are not tapped for 10-32 screws, the mounting flanges are placed behind the front rail and a bar nut is used. Figure 2-14 shows these methods of mounting the stationary sections.

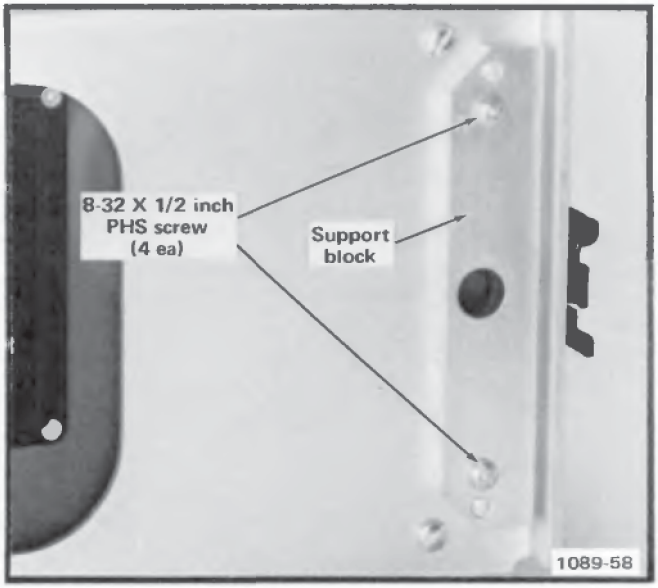

Figure 2-13. Installing the support block on the instrument.

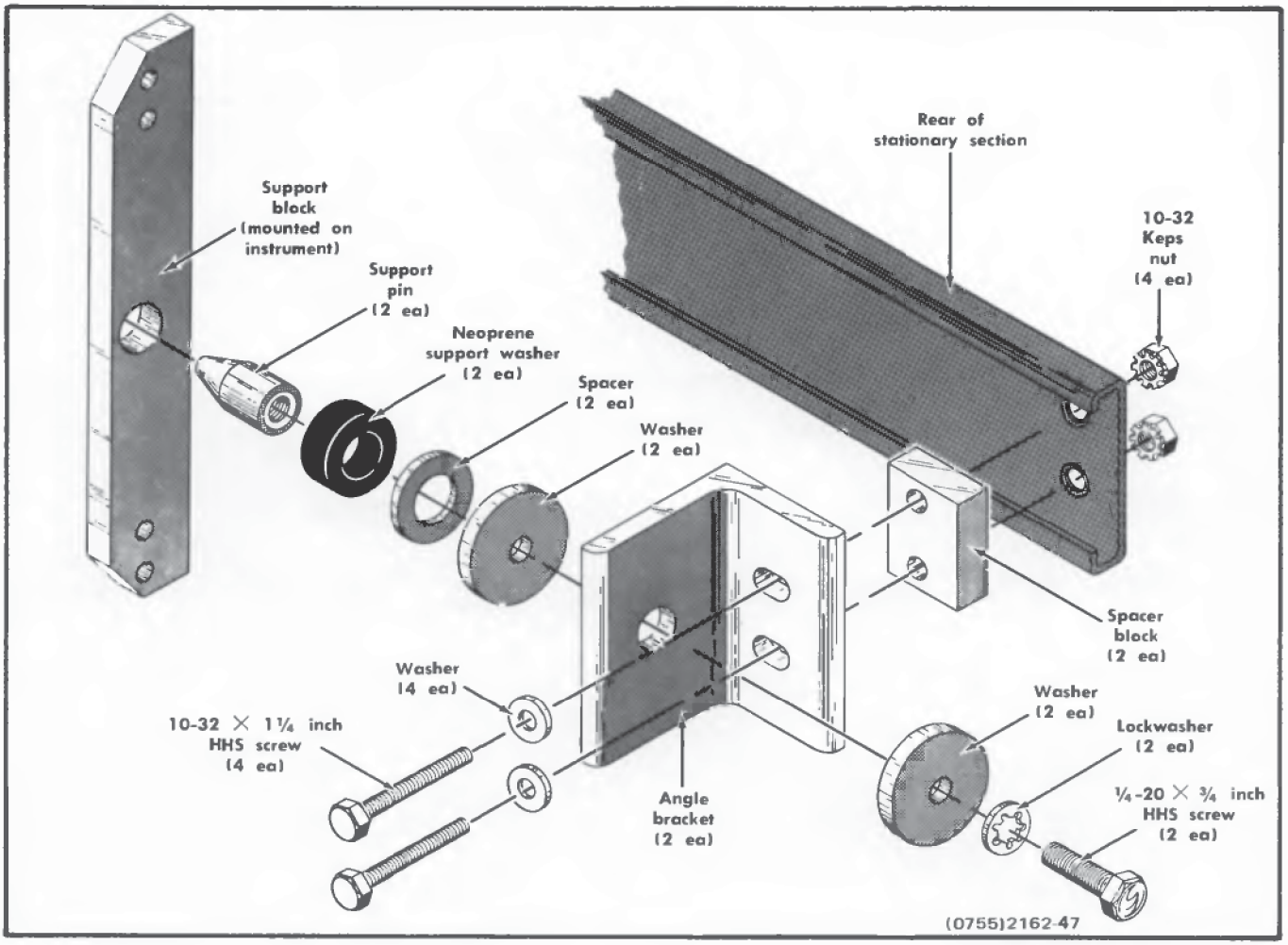

Figure 2-12. Rear support kit.

http://manoman.sqhill.com

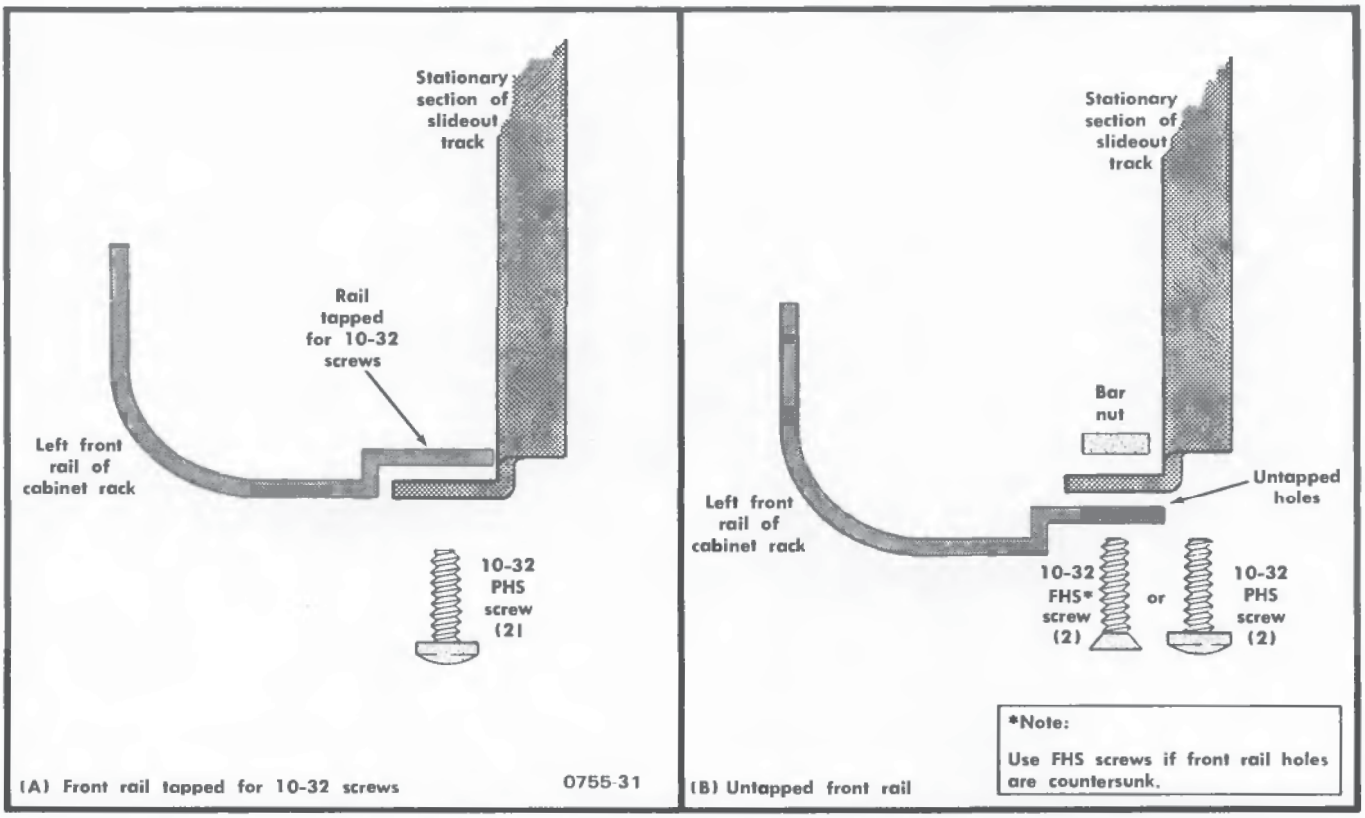

Figure 2-14. Methods of mounting the stationary section to the front rails.

The rear of the stationary sections must be firmly supported to provide a shock-mounted installation. This rear support must be located 17.471 inches, ±0.031 inch, from the outside surface of the front rail when the mounting flange is mounted outside of the rail, or 17.531 inches, ±0.031 inch, from the rear surface of the front rail when the mounting flange is mounted behind the front rail. If the cabinet rack does not have a strong supporting member located the correct distance from the front rail, an additional support must be added. The instrument will not meet the environmental specifications unless firmly supported at this point. Figure 2-14 illustrates a typical rear installation using the rear support kit and gives the necessary dimensions.

Use the following procedure to install the R465B in a rack:

1. Select the proper front-rail mounting holes for the stationary section using the measurements shown in Figure 2-15.

http://manoman.sqhill.com

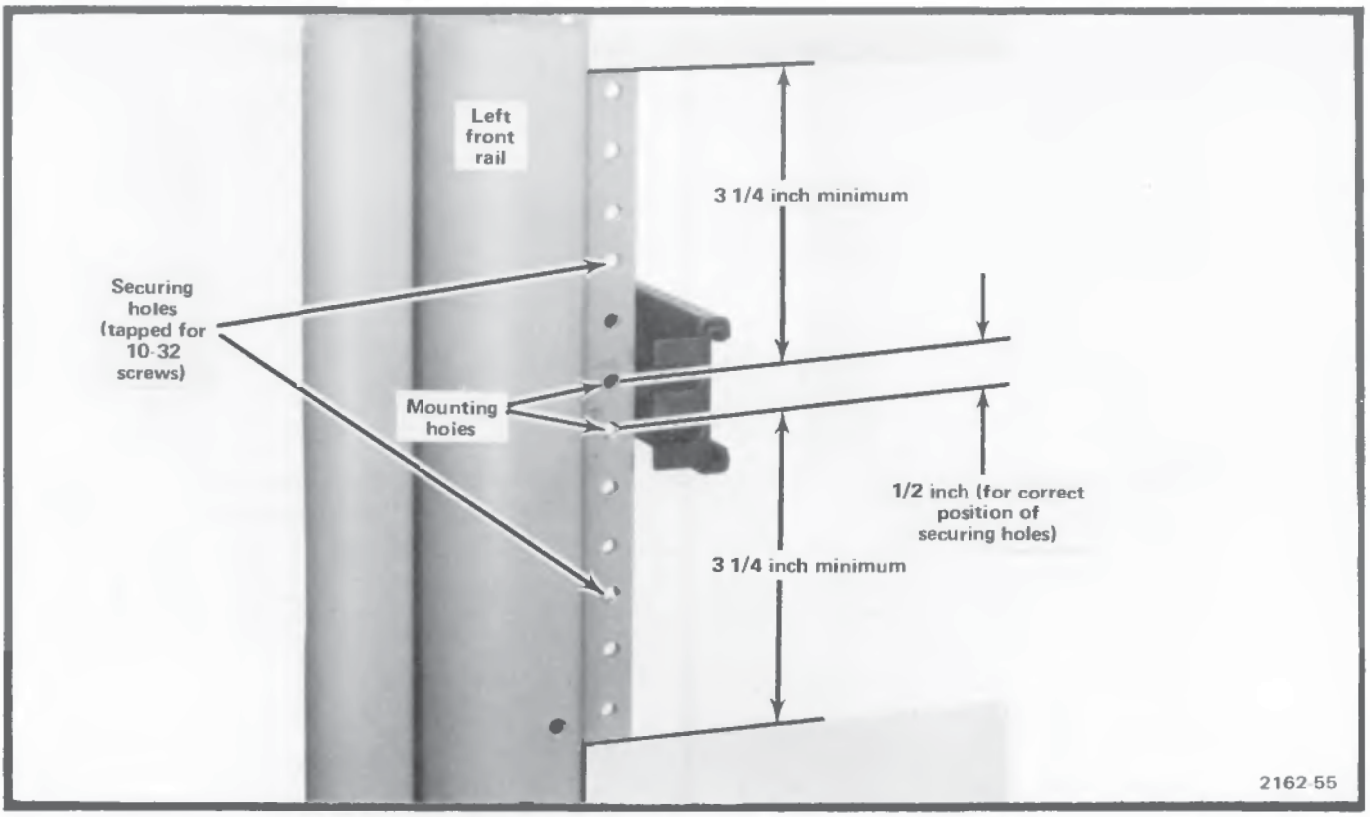

Figure 2-15. Locating the mounting holes for the left stationary section. Same dimensions apply to right stationary section.

2a. If the mounting flanges of the stationary sections are to be mounted in front of the front rails (rails tapped for 10-32 screws), mount each stationary section as shown in Figure 2-16(A).

2b. If the mounting flanges of the stationary sections are to be mounted behind the front rails (rails not tapped for 10-32 screws), mount each stationary section as shown in Figure 2-16(B).

3. Attach an angle bracket to both rear rails of the rack through the spacer block, stationary section and into the rear rail of the rack. Note that the holes in the spacer block are not centered. Be sure to mount the block with the narrow edge toward the front of the rack; otherwise, the instrument may not slide all the way into the rack. Do not tighten the mounting screws. Figure 2-12 shows the parts in the rear support kit and the order in which they are assembled.

4. Assemble the support pin to the angle bracket in the order shown in Figure 2-12. Leave the spacer (washer) off, but install the neoprene washer.

5. Install a support block on each side of the instrument as shown in Figure 2-13.

http://manoman.sqhill.com

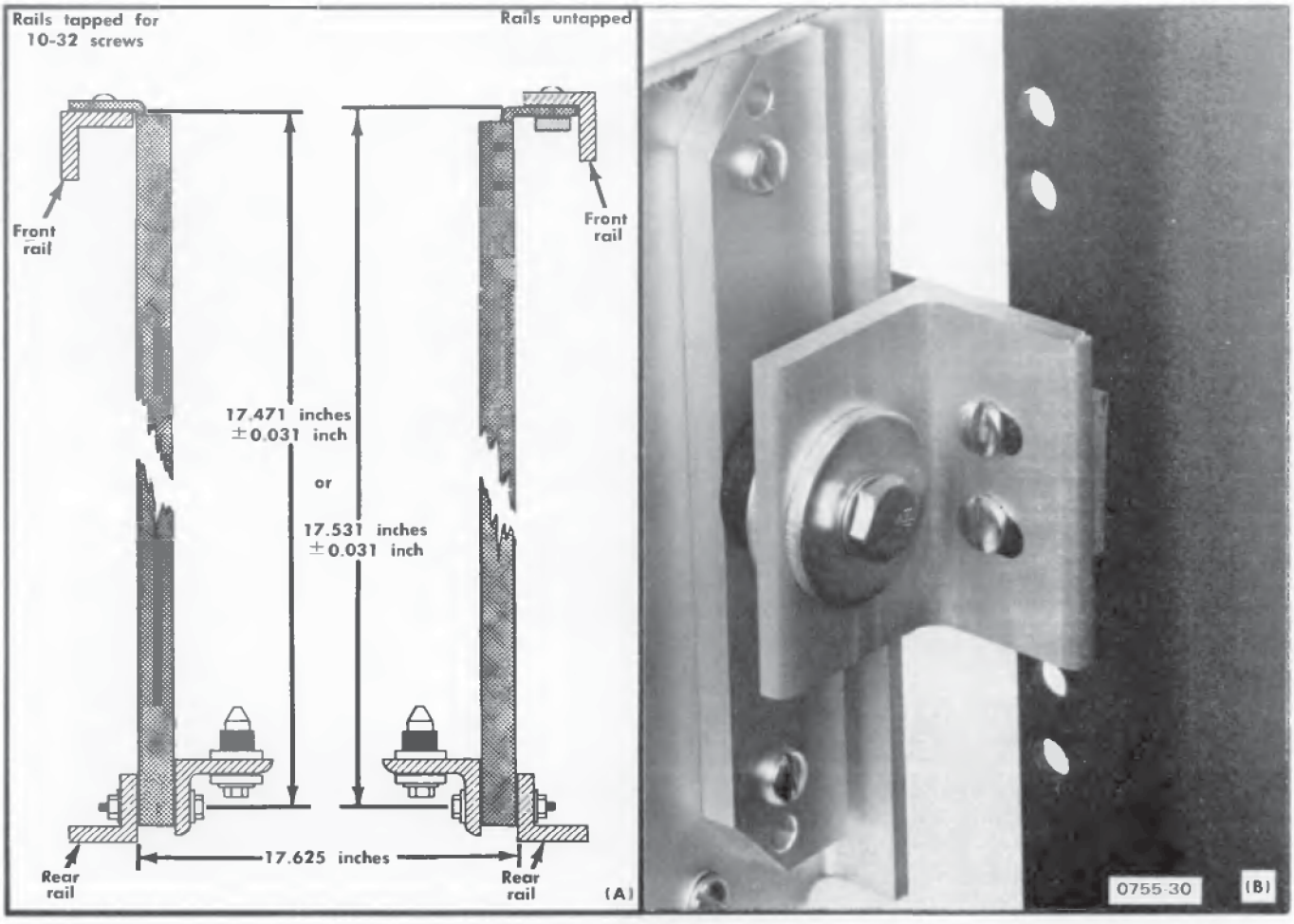

Figure 2-16. Supporting the rear stationary sections: (A) Dimensions necessary; (B) Completed installation.

6. Refer to Figure 2-17 to insert the instrument in the rack. Do not connect the power cord or install the securing screws until all adjustment have been made.

7. With the instruments pushed all the way into the rack, adjust the angle brackets so the neoprene washers on the support pins are seated firmly against the rear of the instrument and the support pins are correctly positioned in the support block on the rear of the instrument. Tighten all screws.

8. Pull the instrument partially out of the rack.

9. Remove the neoprene washers from the support pins and place the spacers on the pins. Replace the neoprene washers.

10. Position the instrument so the pivot screws (widest part of the instrument) are approximately even with the front rails.

http://manoman.sqhill.com

TO INSERT THE R465:

1. Pull the intermediate section (A) of each slide-out track out to its fully extended position.
2. Insert the chassis section (B) (on instrument) into the intermediate sections.
3. Press both stop latches (C) and push the instrument into the rack until the latches snap into the stop latch holes (D).
4. Connect the power cord to the power source.
5. Again press the stop latches (D) and push the instrument all the way into the rack.
6. To secure the R465 to the rack, insert the 4 securing screws (E), with finishing washers and teflon washers, through the slots in the instrument front panel and screw them into the front rails of the rack.

TO REMOVE THE R465:

1. Remove the securing screws and washers (E).
2. Pull the instrument outward until the stop latches snap into the stop latch holes.
3. Disconnect the power cord.
4. Press both stop latches (D) and pull the instrument out of the rack.

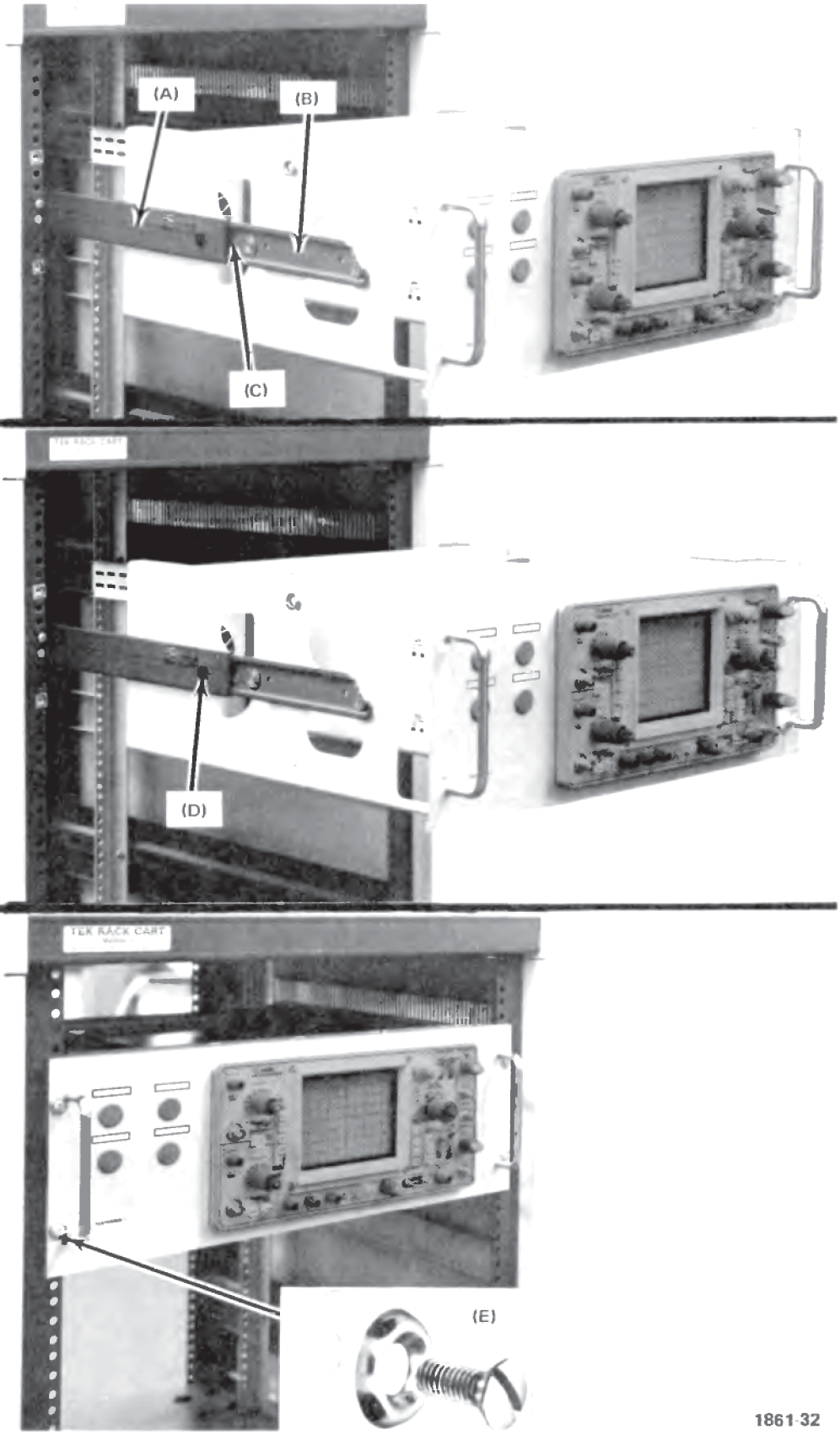

Figure 2-17. Procedure for inserting or removing the instrument after the slide-out tracks have been installed

http://manoman.sqhill.com

11. Adjust the alignment of the stationary sections according to the procedure outlined in Figure 2-18. (If the rear alignment is changed, recheck the rear support pins for correct alignment.)

12. After the tracks operate smoothly, connect the power cord to the power source.

13. Push the instrument all the way *into the rack* and secure it to the rack with the securing screws and washers as shown in Figure 2-17.

NOTE

The securing screws are an important part of the shock-mounted installation. If the front rails are not tapped for the 10-32 securing screws, other means must be provided for securing the instrument to the rack.

ALTERNATIVE REAR MOUNTING METHODS

CAUTION

Although the following methods provide satisfactory mounting under normal conditions, they do not provide solid support at the rear of the instrument. If the instrument is subjected to severe shock or vibration when mounted using the following methods, it may be damaged.

An alternative method of supporting the rear of the instrument is shown in Figure 2-19. The rear support brackets supplied with the instrument allow it to be mounted in a rack which has a spacing between the front and rear rails of 11 to 24 inches. Figure 2-19(A) illustrates the mounting method if the rear rails are tapped for 10-32 screws, and Figure 2-19(B) illustrates the mounting method if the rear rails are not tapped for 10-32 screws. The rear support kit is not used for this installation.

If the rack does not have a rear rail, or if the distance between the front and rear rails is too large, the instrument may be mounted without the use of the slide-out tracks. Fasten the instrument to the front rails of the rack with the securing screws and washers. This mounting method should be used only if the instrument will not be subjected to shock or vibration and if it is installed in a stationary location.

REMOVING OR INSTALLING THE INSTRUMENT

After initial installation and adjustment of the slide-out tracks, the R465B can be removed or installed by following the instructions given in Figure 2-17. No further adjustments are required under normal conditions.

SLIDE-OUT TRACK LUBRICATION

The slide-out tracks normally require no lubrication. The special finish on the sliding surfaces provides permanent lubrication. However, if the tracks do not slide smoothly even after proper adjustment, a thin coating of paraffin rubbed onto the sliding surfaces may improve operation.

TO ADJUST ALIGNMENT:

1. **Position the instrument with the pivot screws approximately even with the front rails.**
2. **Loosen the mounting screws at the front of both stationary sections (left side shown).**
3. **Allow the tracks to seek their normal positions with the instrument centered in the rack.**
4. **Tighten the mounting screws.**
5. **Push the instrument all the way into the rack. If tracks do not slide smoothly, check for correct spacing between the rear supports.**
6. **Check the vertical positioning of the R465 front panel with respect to adjacent instruments or panels. If not correct, reposition as necessary.**

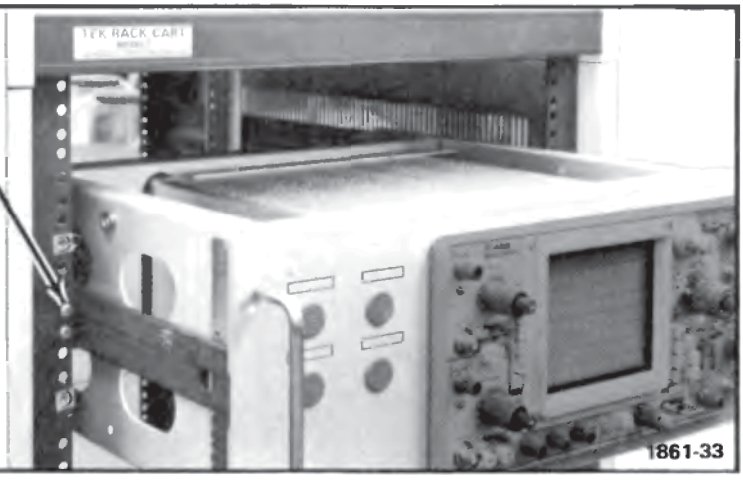

Figure 2-18. Alignment adjustment for correct operation.

http://manoman.sqhill.com

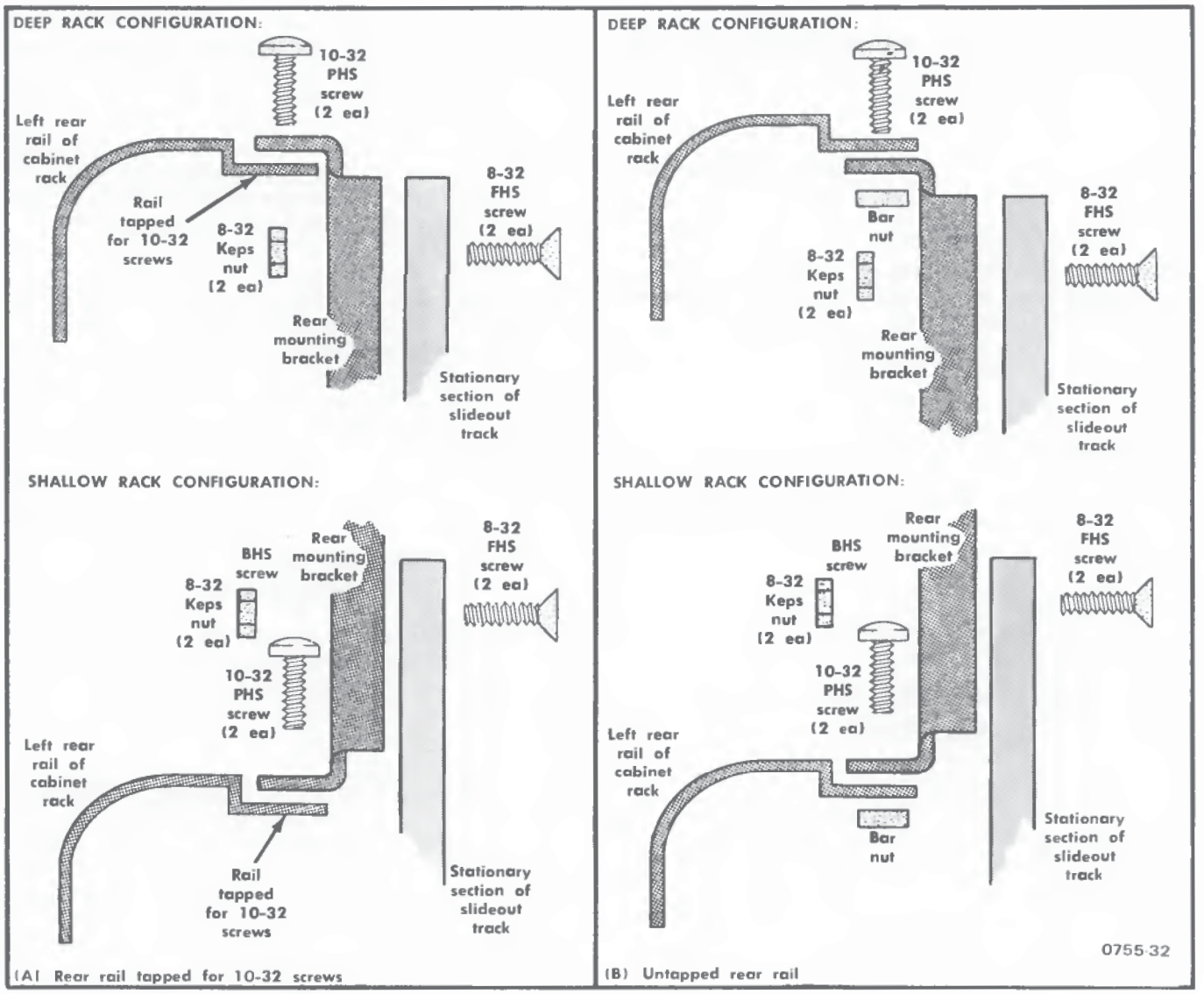

Figure 2-19. Alternative method of installing the instrument using rear support brackets.

http://manoman.sqhill.com

THEORY OF OPERATION

INTRODUCTION

SECTION ORGANIZATION

This section of the manual contains a functional description of the circuitry used in the 465B Oscilloscope. It begins with a general summary of the instrument, using the basic block diagram shown in Figure 3-1. As an additional reference, a comprehensive overall block diagram is provided in the tabbed Diagrams section at the back of this manual.

Each major circuit is explained in detail, using additional functional block diagrams to show the interconnections between parts comprising the circuit, to indicate circuit components, and to identify interrelationships with front panel controls. Schematic diagrams also are provided in the Diagrams section of the manual and are keyed to their respective circuit descriptions by numbered diamond symbols. For optimum understanding of the circuit being described, you should refer to both the appropriate schematic diagram and functional block diagram.

INTEGRATED CIRCUIT DESCRIPTIONS

Digital Logic Conventions

Digital logic techniques are used to perform many functions within this instrument. Function and operation of the logic circuits are represented by logic symbology

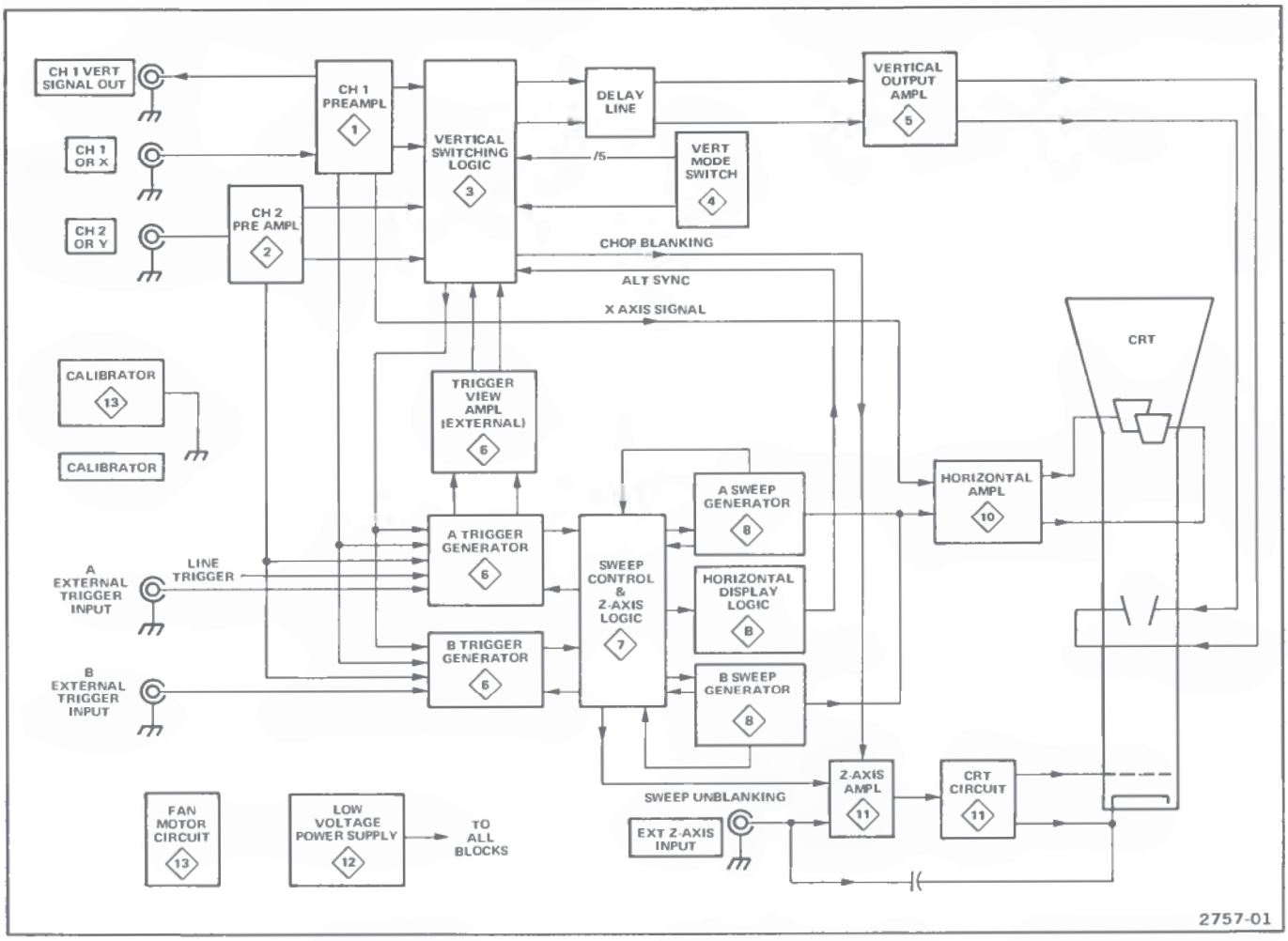

Figure 3-1. Basic block diagram of the 465B Oscilloscope.

http://manoman.sqhill.com

and terminology. All logic functions are described using the positive logic convention. Positive logic is a system of notation whereby the more positive of two levels is the true, or 1 state; the more negative level is the false, or 0 state. In the logic description the true state is referred to as HI, and the false state is referred to as LO. The specific voltages which constitute a HI or a LO state vary between specific devices.

Linear Devices

The functioning of individual linear integrated circuit devices is described in this section using waveforms or other techniques to illustrate their operation.

GENERAL DESCRIPTION

The following discussion provides an overall functional description of the 465B Oscilloscope. Refer to the basic block diagram, Figure 3-1, and to the detailed block diagram located in the Diagrams section of this manual. Each major block in these diagrams represent a major circuit within the instrument. The numbered diamond symbol on each block refers to the appropriate schematic diagram also located in the Diagrams section.

Signals to be displayed on the crt are applied to the CH 1 OR X input connector or the CH 2 OR Y input connector. These input signals then are amplified by the Preamplifiers. Each channel includes separate vertical deflection factor, input coupling, balance, gain, and variable attenuation switches or controls. A trigger pickoff stage in each Vertical Preamplifier supplies a sample of that channel's signal to the Trigger Generator circuit. A sample of the Channel 1 signal is also supplied to the CH 1 VERT SIGNAL OUT connector on the instrument rear panel.

In the X-Y mode of operation the Channel 1 signal is connected to the input of the Horizontal Amplifier circuit to provide the X-axis deflection. The Channel 2 signal is amplified by the Vertical Output Amplifier circuit to provide the Y-Axis deflection. The Channel 2 Vertical Preamplifier circuit contains an invert feature to allow the operator to invert the Channel 2 signal displayed on the crt.

The outputs of both Vertical Preamplifier circuits and the output of the A Trigger View Amplifier circuit are connected to the Vertical Switching circuit. The Vertical Mode Switch circuit uses the inputs from the VERT MODE switches and the X-Y position of the A TIME/DIV switch to set the Vertical Switching circuit into the chosen Vertical Mode of operation. The Vertical Switching circuit then will select the input(s) to be displayed on the crt.

The Chopped Blanking signal, used to blank the switching transients between channels when the chopped mode of operation is selected, is produced in the Vertical Switching circuit and fed to the Z-Axis Amplifier circuit. A Normal Trigger pickoff stage at the output of the Vertical Switching circuit provides a sample of the displayed signal(s) to the Trigger Generator circuits.

The output of the Vertical Switching circuit is connected to the Vertical Output Amplifier through the Delay Line. The Vertical Output Amplifier circuit provides final amplification of the signal before it is connected to the vertical deflection plates of the crt. This circuit includes part of the BEAM FINDER switch, which, when activiated, limits vertical deflection to within the graticule area so that location of off-screen displays is facilitated.

The A and B Trigger Generator circuits each create an output pulse which initiates the sweep produced by either the A or B Sweep Generator circuits. The input signal to the A and B Trigger Generator circuits can be individually selected from any of the following sources: Channel 1 signal, Channel 2 signal, signal(s) displayed on the crt (Normal), signal(s) connected to the External Trigger Input connectors, or a line voltage sample (A Trigger only). Each trigger circuit contains level, slope, coupling, and source controls. The A External Trigger input is also fed to the A Trigger View Amplifier where it is amplified and made available to the Vertical Switching circuit for selection to be viewed on the crt.

The A Sweep Generator circuit, when activated by the A Trigger Generator circuit, produces a linear sawtooth output signal, the slope of which is controlled by the A TIME/DIV switch. The TRIG MODE switches control the operating mode of the A Trigger Generator circuit. When AUTO is selected, the absence of an adequate trigger signal for about 100 milliseconds after the end of holdoff causes an A Sweep start gate to be generated. When NORM is selected, a horizontal sweep is presented only when triggered by an adequate trigger signal. Pushing the SINGL SWP push button sets the Sweep Logic to initiate one sweep after a trigger pulse is received.

The Z-Axis logic circuit produces a gate signal to unblank the crt so that the display can be presented. This gate signal is coincident with the sawtooth produced by

http://manoman.sqhill.com

the A Sweep Generator circuit. The A gate signal, which is also coincident with the sawtooth, is available at the A +GATE connector on the instrument rear panel. The Sweep Control Logic circuit also produces a Horizontal Alternate Sync pulse. This pulse is fed to the Horizontal Display Logic circuit to switch the display between A Intensified and B Delayed sweeps when the ALT Horizontal Display mode is selected.

The B Sweep Generator circuit is basically the same as the A Sweep Generator circuit. However, this circuit only produces a sawtooth output signal when a delay time period, determined by the DELAY TIME POSITION dial has lapsed, or when a trigger pulse is received from the B Trigger Generator circuit. If the B TRIGGER SOURCE switch is set to the STARTS AFTER DELAY position, the B Sweep Generator begins to produce the sweep immediately following the selected delay time. If the SOURCE switch is in one of the remaining positions, the B Sweep Generator circuit does not produce a sweep until it receives a trigger pulse from the B Trigger Generator circuit.

The output of either the A or B Sweep Generator is amplified by the Horizontal Amplifier circuit to produce horizontal deflection for the crt, except when the A TIME/DIV switch is in the fully counterclockwise (X-Y) position. The Horizontal Amplifier circuit contains a X10 magnifier that may be selected to increase the sweep rate 10 times in any A or B TIME/DIV switch position. Other deflection signals may be connected to the Horizontal Amplifier by using the X-Y mode of operation. When the TIME/DIV switch is set to X-Y, the X signal is connected to the Horizontal Amplifier circuit through the Channel 1 Vertical Preamplifier circuit.

The Z-Axis Amplifier circuit determines the crt intensity and blanking. The Z-Axis Amplifier circuit sums the current inputs from the INTENSITY control, Vertical Switching circuit (chopped blanking), Z-Axis Logic circuit (unblanking), and the EXT Z-AXIS Input connector. The output level of the Z-Axis Amplifier circuit controls the trace intensity through the CRT circuit. The CRT circuit provides the voltages and contains the controls necessary for operation of the cathode-ray tube.

The Power Supply circuit provides the low voltage power necessary for operation of the 465B. Low voltage power is distributed to all circuits in the instrument.

The Calibrator circuit produces a square-wave output (with both accurate voltage and current amplitudes) that is useful for both checking the calibration of the instrument and compensating probes. The CALIBRATOR current loop provides an accurate current source for calibration of current-measuring probe systems.

http://manoman.sqhill.com

DETAILED DESCRIPTION

CHANNEL 1 PREAMP ①

Introduction

The Channel 1 Preamplifier circuit, shown in Figure 3-2, provides control of input coupling, vertical deflection factor, gain and dc balance. Input signals for vertical deflection on the crt are connected to the CH 1 OR X input connector. When the TIME/DIV switch is set to the X-Y mode, the input signal applied to the CH 1 OR X connector provides the horizontal (X-axis) deflection.

Input Coupling

Signals applied to the input connector can be either ac-coupled or dc-coupled or, they can be internally disconnected from the input to the Vertical Input Amplifier stages. When Input Coupling switch S30A is set for dc coupling, the input signal is coupled directly to the Input Attenuator stage. When ac coupled, the input signal passes through capacitor C13012 which prevents the dc component of the input signal from passing to the

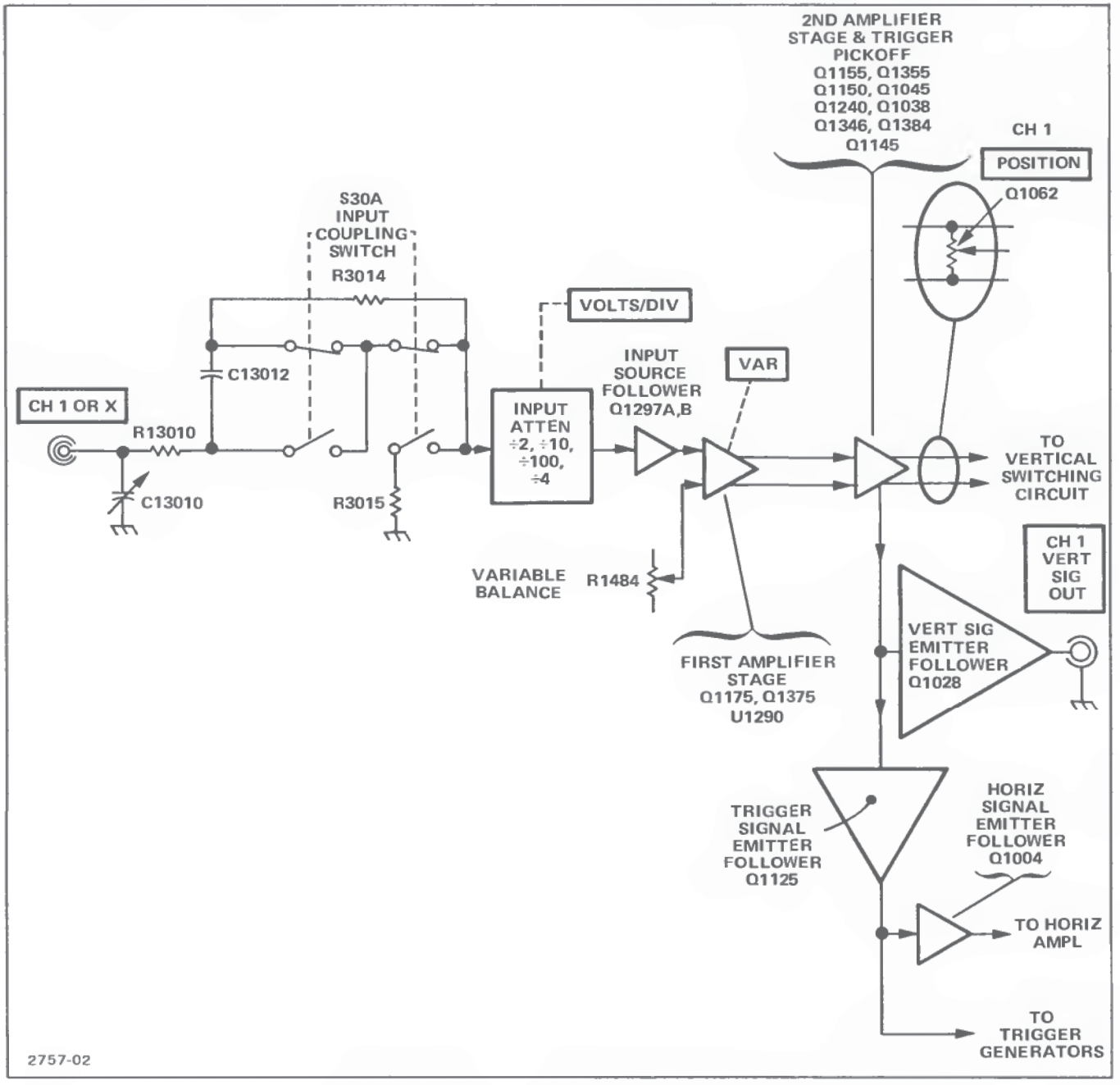

Figure 3-2. Detailed block diagram of the Channel 1 Preamplifier circuit.

http://manoman.sqhill.com

amplifier. In the GND position of S30A, the signal path is opened and the input of the amplifier is connected to ground through R3015. This provides a ground reference without the need to disconnect the applied signal from the input connector. Resistor R3014 is a high resistance connected across Input Coupling switch S30A, which allows C13012 to be precharged when the switch is in the GND position. Therefore the trace remains within the viewing area of the crt when the switch is placed in the AC position.

Input Attenuator

The effective overall deflection factor of each vertical channel of the 465B is determined by the setting of the Channel VOLTS/DIV switch. The basic deflection factor of the Vertical Deflection System is 5 millivolts/division of crt deflection. To achieve the deflection factor values marked on the front panel, precision attenuators are switched into the input to the Vertical Preamplifier circuit.

For VOLTS/DIV switch positions above 5 millivolts, frequency compensated-voltage dividers (attenuators) are switched into the circuit to produce the vertical deflection factors indicated on the front panel. Each channel has a 2X, 4X, 10X and 100X attenuator which may be selected in various combinations. A constant attenuation is provided at all frequencies within the bandwidth range of the instrument. The Input Attenuators are designed to maintain the same input characteristics (1 megohm and approximately 20 picofarads) for each setting of the VOLTS/DIV switch. Each attenuator contains an adjustable series capacitor to provide correct attenuation at high frequencies and an adjustable shunt capacitor to provide correct input capacitance.

NOTE

Each attenuator is a hybrid encapsulated plug-in assembly; therefore, replacement of individual components within the attenuator is not possible. Should defects occur, the attenuator must be replaced as a unit.

Source Follower

The Channel 1 signal from the input attenuator is connected to Source Follower Q1297A through R3042, C3042, and R3045. Resistor R3039 provides the input resistance and resistor R3045 functions as a damping resistor. Q1297B is a constant current source for Q1297A. Q1297A and B provide a high input impedance for the attenuators and the current drive needed for the First Amplifier.

In the event that excessively high-amplitude signals are applied to Source Follower Q1297A, the signal will be limited by CR1298 and the gate-source junction of Q1297A. If the negative signal amplitude causes CR1298 to become forward biased, Q1297A gate is clamped to approximately −8.7 volts. Excessive positive signal amplitude will forward bias the gate-source junction of Q1297A. As soon as gate current flows, the gate voltage will cease increasing. Gate current is limited to a safe value by the high resistance of R3042.

First Amplifier

The First Amplifier stage is an integrated emitter-coupled, push-pull, cascode amplifier U1290. The input signal on pins 13 and 16 is converted from a single-ended signal to a push-pull signal by a paraphase amplifier and then is fed to the common base output stage to produce the current drive to Q1175 and Q1375. The CH 1 VAR VOLTS/DIV control, which is connected to pin 11 of U1290, varies the gain of the First Cascode Amplifier stage. This control provides variable vertical deflection at each position of the VOLTS/DIV switch. With the VAR control in its calibrated detent (wiper at ground), the A and D output transistors of U1290 are conducting. The B and C output transistors are biased off. Thus, the signal current available to the following amplifier stage is the collector current flowing in output transistors A and D.

When the VAR control is rotated out of its calibrated detent, the B and C output transistors of U1290 begin to conduct by an amount determined by the position of the VAR control. This causes two events to occur:

1. The signal current flowing in the A and D output transistor is reduced by the amount of signal current flowing in the B and C output transistors.

2. Output transistors A and C and output transistors B and D conduct current of opposite polarity. The output of transistor C is added to the output of transistor A to reduce the signal current available at pins 5 and 6, and the output current of transistor B is added to the output current of transistor D to reduce the signal current available at pins 8 and 9.

The component values selected for the variable function provide a variable attenuation ratio of approximately 2.5 to 1. Channel 1 Variable Balance adjustment R1484 is adjusted so that no trace shift in the display occurs when rotating the VAR control. When the Channel 1 VAR control is out of its calibrated detent the Channel 1 UNCAL LED is illuminated. The components connected between pins 2 and 3 of U1290 provide frequency compensation for the stage.

http://manoman.sqhill.com

Q1175 and Q1375 are common-base amplifiers that convert the output current signals from U1290 into voltage signals to be amplified in the Second Amplifier circuit. Gain adjust R1482 allows setting of the overall gain of the Channel 1 Vertical Preamplifier by adjusting the signal voltage to the bases of Q1155 and Q1355.

Second Amplifier

Q1155 and Q1355, in conjunction with Q1344 and Q1346 in the Vertical Switching circuit, form a push-pull cascode amplifier. CR1263, CR1264, and RT1267 provide temperature compensation for the high-frequency gain amplifier to ensure constant gain in the presence of varying ambient temperature. As temperature increases, the resistance value of RT1267 decreases, and the reverse bias on both CR1263 and CR1264 decreases. CR1263 and CR1264 are voltage-variable capacitors whose capacitance increases as reverse bias decreases. The increase in capacity at higher temperatures provides additional high-frequency peaking to counteract the effects of increased temperature on the amplifier's gain.

The push-pull signals at the emitters of Q1155 and Q1355 are converted to a single-ended signal by Q1150, Q1250, Q1045, and Q1145. The current signal from Q1145 is converted to a voltage signal by common-base amplifier stage Q1038 and applied to the bases of Q1125 and Q1028. Q1028 provides the output signal to the CH 1 VERT SIGNAL OUT output connector located on the instrument rear panel. CR1014, CR1024, CR1023, and CR1013 protect the emitter circuit of Q1028 in the event large signal levels are accidentally connected to the CH 1 VERT SIGNAL OUT connector. The output signal at the emitter of Q1125 is used as the trigger signal source in the CH 1 positions of the Trigger SOURCE switches and as the signal source for emitter follower Q1004. R1126 adjusts the dc level of the CH 1 trigger source signal. When in the X-Y mode, Q1004 provides the X-axis signal from the Channel 1 Preamplifier to the Horizontal Amplifier.

R1055 is the Channel 1 Vertical POSITION control. When set to its mid-position, the constant current supplied by Q1062 flows equally through each side of R1055 into the collectors of Q1155 and Q1355. As the POSITION control is rotated off its mid-point, one side of the amplifier receives more current while the other side of the amplifier receives less current. This proportionally changes the amount of current flowing into the Delay Line Drivers, therefore causing the trace to be positioned vertically on the crt. The mid-range operating point of the POSITION control is set by adjusting R1135.

CHANNEL 2 PREAMP ◇2

Introduction

The Channel 2 Preamplifier circuit is virtually the same as the Channel 1 Preamplifier circuit. The only differences between the two circuits are described in this part. Input signals for vertical deflection on the crt are connected to the CH 2 OR Y input connector. When the TIME/DIV switch is set to the X-Y mode, the Channel 2 input signal provides the vertical (Y-axis) deflection.

First Amplifier

Basically, the First Amplifier stage in Channel 2 operates the same as the First Amplifier stage in Channel 1. However, the Channel 2 circuit also contains the INVERT switching function. This allows the Channel 2 crt display to be inverted. When pushed in, the INVERT switch changes the biasing on the output transistors of U1790 so that the normally inactive transistors (B and C) now carry the signal. Since their outputs are cross-coupled from side to side, the output signal is of opposite polarity from the signal available when the INVERT switch is in the normal (button out) position. Channel 2 Invert Balance potentiometer R1975 allows the dc balance of the stage to be adjusted to eliminate baseline shift in the display when switching from a normal to an inverted display.

VERTICAL SWITCHING LOGIC ◇3

Introduction

The Vertical Switching Logic (Figure 3-3) determines the input signal or combination of input signals to be connected to the Vertical Output Amplifier. Possible input signal combinations that may be displayed are selected by a read-only memory (ROM) integrated circuit that is controlled by the VERT MODE switches and the X-Y position of the TIME/DIV switch.

Diode Gates

The Channel 1, Channel 2, and Trigger View Diode Gates, consisting of four diodes each, act as switches that are controlled by the Vertical Switching Logic circuit. Outputs Q_0, Q_1, and Q_2 of U1705 (pins 2, 7, and 10) control the switching transistors that switch the Diode Gates on or off. These output signals also are fed into the A_0, A_1, and A_2 inputs of ROM U1605 (pins 5, 6, and 7), to indicate the state of the switches. (Refer to the Maintenance section of this manual for a Logic Table of the ROM functions.) A LO indicates that a particular switch is on, and a HI indicates it is off. The ROM is programmed to use the state indicators from U1705 and the selected VERT MODE inputs to U1605 A_3 through A_7 (pins 4, 3, 2, 1, and 15) to turn on the correct Diode Gates for obtaining the selected signal, or combination of signals, to be displayed.

http://manoman.sqhill.com

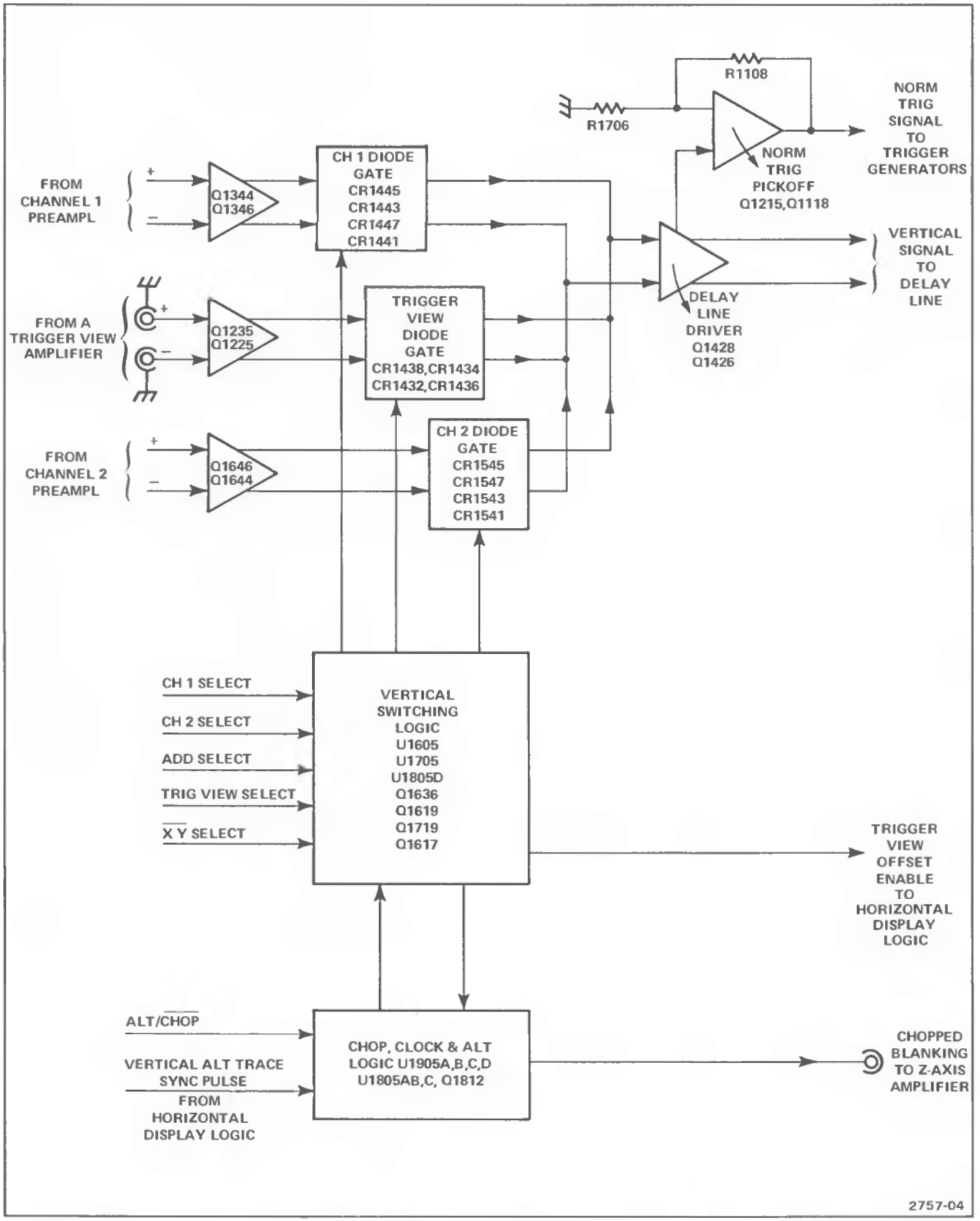

Figure 3-3. Detailed block diagram of the Vertical Switching Logic circuit.

http://manoman.sqhill.com

CHANNEL 1 DISPLAY ONLY. When the CH 1 VERT MODE push button is pressed, a HI is applied to the A_3 input of U1605. The A_4, A_5, and A_6 inputs will be LO and the A_7 input (controlled by the X-Y position of the A TIME/DIV switch) will be HI. This combination of inputs is decoded to switch transistor Q1619 on, which turns on the Channel 1 Diode Gate. The O_1 output of U1605 will be LO, the O_2 and O_3 outputs will be HI. The O_4 output, which controls the CHOP oscillator, will be low. A LO will disable the CHOP clock and U1705 will remain in a state that allows the Diode Gates to pass only the Channel 1 input signal to the Delay Line Driver.

With Channel 1 only selected, the Q_0 output of U1705 will be LO. The LO will turn on transistor Q1619 and the junction of CR1447 and CR1443 will be returned to the +5-volt supply through R1625 and Q1619. This raises the junction voltage to reverse bias CR1447 and CR1443. Then CR1445 and CR1441 are forward biased and the Channel 1 input signal passes through CR1441 and CR1445 to the Delay-Line Driver.

CR1432 and CR1434 in the Trigger View Diode Gate and CR1547 and CR1543 in the Channel 2 Vertical Signal Diode Gate remain forward biased through the pull-down resistors to the −8 volt power supply. Trigger View signals and the Channel 2 input signals are shunted to the −8 volt supply and are blocked from the Delay Line Driver because CR1438 and CR1436 in the Trigger View Diode Gate and CR1545 and CR1541 in the Channel 2 Vertical Signal Diode Gate are reverse biased.

CHANNEL 2 DISPLAY ONLY. When CH 2 VERT MODE is selected, Q1719 turns on; Q1619 and Q1617 remain off. The center diodes of the Channel 1 Diode Gate and the center diodes of the Trigger View Diode Gate are forward biased, and the center diodes of the Channel 2 Diode Gate are reverse biased. Trigger view and Channel 1 signals are blocked from the Delay Line Driver, and the Channel 2 input signal is connected to the Delay Line Driver.

A TRIGGER VIEW (EXT ONLY). When A TRIG VIEW is selected, the Channel 1 and Channel 2 Diode Gates are biased off, and the Trigger View Diode Gate is biased on to allow the External Trigger signal to be connected to the Delay Line Driver. In all single input selections (CH 1 only, CH 2 only, or A TRIG VIEW only) the clock is disabled and U1705 remains in a state to select only the single input chosen to be displayed.

ADD VERTICAL MODE. U1605 is programmed to turn on transistor Q1619 (CH 1) and Q1719 (CH 2). The logic from U1705 will turn on Q1636 (ADD) at the same time, if ADD VERT MODE is selected. It is not necessary to select Channel 1 or Channel 2 to obtain the ADD display. With ADD selected, the Q_0 and Q_1 outputs of U1705 will be LO, and the Q_0 and Q_1 outputs will be HI. This will cause both Channel 1 and Channel 2 Diode Gates to be on. With $\overline{Q_0}$ and $\overline{Q_1}$ HI, U1805D will be enabled to turn on Q1636. The junction of R1532 and R1534 will have −8 volts applied to provide sufficient additional current to keep both Diode Gates turned on without altering the dc levels associated with the Delay Line Driver. By selecting additional VERT MODEs, it is possible to view the Channel 1 input, the Channel 2 input, the A External Trigger input, and ADD MODE on the crt during one display cycle on four separate traces.

X-Y MODE. When the A TIME/DIV switch is set to X-Y, a LO is applied to pin 15 of U1605. The ROM is programmed to produce outputs that turn on Channel 2 switching transistor Q1719 and disable the CHOP clock. This action causes the Channel 2 input to be connected to the Delay Line Driver for the Y-axis signal. It is not necessary to select Channel 2 VERT MODE, since the ROM will not respond to any other input while the X-Y mode is selected.

Chop Clock and Alternate Logic

U1905B, U1805A, R1904, R1903, and C1804 make up the Chop Clock Oscillator circuit. When the O_4 output of U1605 is HI and the CHOP MODE is selected, a HI is present on pin 5 of U1905B. U1805A will alternately put a HI and then a LO on pin 4 of U1905B. Assume an initial LO on pin 4 of U1905B. U1905B is a NAND gate, so its output will be HI. C1804 charges toward a HI and as soon as its charge reaches the threshold level of U1805A, U1805A will switch to a HI output. The HI output of U1805A pin 3 will assert a HI on U1905B pin 4. This HI is NANDed with the HI already present on pin 5 of U1905B to produce a LO at pin 6 of U1905B. Now C1804 has to discharge toward a LO. As soon as the charge on C1804 reaches the LO threshold of U1805B, U1805B will switch to a LO output and the cycle will repeat. The Chop Clock oscillator frequency is approximately 1 megahertz and depends on the RC-time constant of R1903 and C1804, as well as the threshold level of U1805A (see Figure 3-4).

When CHOP is selected, pin 2 of U1905A will be LO. Pin 3 of U1905A will be HI which enables U1805C to pass the CHOP clock oscillator frequency to pin 9 of U1705. U1705 changes state for every positive transition of the clock

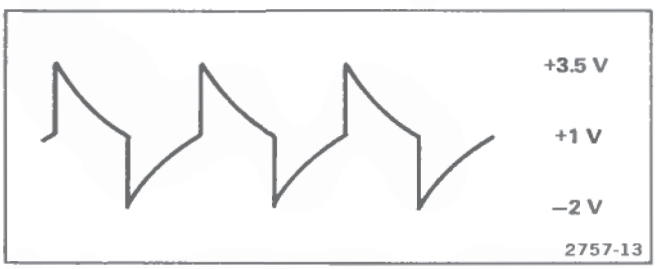

Figure 3-4. Switching waveform at the junction of R1903 and R1904.

http://manoman.sqhill.com

oscillator (once each cycle) effectively performing a divide-by-two. Therefore, the CHOP frequency is approximately 500 kilohertz. The CHOP clock oscillator will not be enabled unless more than one input is selected. As stated previously, a single-input VERT MODE selection will cause U1705 to remain in a state that will allow only the selected input to be passed on to the Delay Line Driver.

If multiple inputs are selected for display, U1705 will be clocked to select the appropriate inputs programmed for display. Transistors Q1619, Q1719, Q1617, and Q1636 (if ADD is selected) are being switched at the Chop clock frequency (CHOP Mode). As the displays are being incremented, the Q_0, Q_1, and Q_2 outputs of U1705 are being used as state indicators to the A_0, A_1, and A_2 inputs of ROM U1605 to indicate the next input to be selected for display. The order of priority of the switching is: CH 1, CH 2, ADD, then TRIG VIEW.

ALTERNATE TRACE SYNC. With ALT Vertical Mode selected, a HI will be present at U1905D pin 12. If more than a single-input display is selected, a HI will also be present at pin 13. The CHOP clock will then be disabled. U1905A will be enabled to pass the Alternate Trace Sync pulse to U1805C pin 9, and U1805C will be enabled to pass the pulse to U1705 pin 9 (clock input). U1705 will now be switching between selected inputs at a rate determined by the Alternate Trace Sync pulse from the Horizontal Display Logic circuit.

If a single input is selected for display, U1805B pin 5 will be LO and the Chop clock will remain disabled. The Alternate Trace Sync pulse will be present at U1705 pin 9, but with only one input selected by the VERT MODE switches, U1705 will not change state and the switching transistor for the selected input to be displayed will remain on.

When Alternate Horizontal Display is chosen, the Alternate Trace Sync input becomes a square wave with a period equal to twice the time between Alternate Trace Sync pulses. This will allow the display of the A sweep and the B sweep before switching to the next vertical input signal to be displayed (see Figure 3-5).

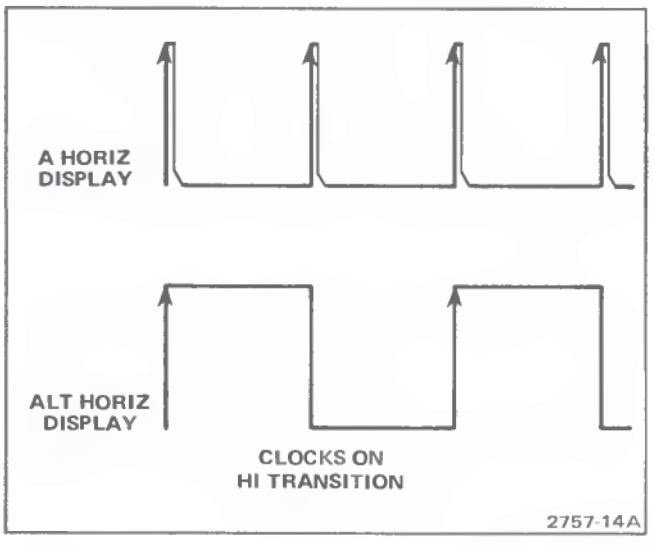

Figure 3-5. Vertical Alt Sync Pulse at U1705 pin 9.

Chopped Blanking Amplifier

When CHOP Mode is selected, a LO on U1905D pin 12 holds U1905D pin 11 HI. This HI enables U1905C to pass the Chop pulse to C1813. C1813 and R1916 differentiate the Chop pulse to produce positive and negative spikes having sufficiently fast rise times necessary for the Chopped Blanking. CR1918 limits the positive spike and R1815 limits the base current of Q1812. The positive portion of the waveform reverse biases Q1812, but when the waveform switches from the positive portion to the negative portion, Q1812 is driven rapidly into conduction. The blanking time is determined by the charging time of C1813 through R1916 and R1815. The positive-going output pulse, which is coincident with trace switching, is connected to the Z-Axis Amplifier circuit through R1914.

Delay-Line Driver

The output from the Diode Gates is applied to the Delay Line Driver composed of Q1426 and Q1428. Transistors Q1426 and Q1428 are connected as feedback amplifiers, with R1328 and R1522 providing feedback from the collector to the base of their respective transistors. A sample of the signal in the collector circuit of R1426 is used for triggering in the Normal mode of trigger operation. Bandwidth Limit switch S1414 connects a pi filter (composed of C1306, C1405, L1412, and L1512) between the output signal lines of the Delay Line Driver to reduce the upper −3 decibel bandwidth limit of the Vertical Amplifier system to approximately 20 megahertz. Resistors R1314 and R1514 provide reverse termination for any reflections in the delay line.

Normal Trigger Pickoff Amplifier

The trigger signal for Normal trigger operation is obtained from the collector of Q1426. Normal Trigger DC Balance Adjustment R1202 sets the dc level of the normal trigger output signal such that the sweep is triggered at the zero level of the displayed signal whenever the trigger LEVEL control is set to zero. Q1215 and Q1118 are connected as a feedback amplifier, with the signal applied to the base of Q1215 and the feedback connected between the output and emitter of Q1215 through R1108.

VERTICAL MODE SWITCH 4

Introduction

The Vertical Mode Switch circuit produces the logic necessary for placing the Vertical Switching Logic circuit into the correct state for the Vertical Mode selected. The Scale-Factor Switching circuit selects the correct scale-factor LED to be illuminated with each Vertical Mode selection.

http://manoman.sqhill.com

Exclusive-NOR Switching Circuit

The Exclusive-NOR Switching circuits produce a LO pulse on the ALT/$\overline{\text{CHOP}}$ select line whenever a VERT MODE push button is either pressed or released. While the ALT Vertical Mode is selected, the LO pulse will enable the Chop oscillator, momentarily producing clock pulses which enable the Vertical Switching Logic circuit to select the correct Vertical Mode for the next display.

Assume that the CH 1 VERT MODE push button has been pressed. The condition of Exclusive-NOR circuit U5235D is as follows: A Hi is on pins 12 and 13 of U5235D, and a HI is present at output pin 11; C5135 has charged to a HI level through R5135. When the push button is released, a LO is immediately applied to pin 12, but C5135 is still charged to a HI level, so the HI remains on pin 13. These input conditions to the Exclusive-NOR circuit will produce a LO at output pin 11 to enable the Chop oscillator. Then C5135 discharges toward a LO level through R5135, and when the LO threshold voltage is reached, both inputs to the Exclusive-NOR circuit will be LO. The output of U5235D will switch back to HI, turning off the Chop oscillator.

When the X-Y Horizontal Display is selected, −8 volts is applied through R5212 to the $\overline{\text{XY}}$ select input of the Vertical Switching Logic circuit (placing it in the X-Y Mode of operation) and through the series combination of R5211 and R5214 to the ALT/$\overline{\text{CHOP}}$ select to enable the Chop oscillator if the Alternate Vertical Mode is selected.

Scale-Factor Switching Circuit

The vertical deflection factor for each channel is indicated by back-lighting the appropriate figures imprinted on the flange of each VOLTS/DIV knob. Because the operation of the Channel 1 and Channel 2 Scale-Factor Switching circuits are similar, only the circuit action of the Channel 1 Scale-Factor Switching circuits is described.

When CH 1 or ADD Vertical Mode is selected, or when X-Y Horizontal Display Mode is selected, −8 volts is applied to the Q5017 base biasing voltage divider network composed of R5114 and R5015. The base of Q5017 will be biased negative, saturating Q5017. When Q5017 is saturated, the X10 and X1 scale-factor LED DS9040 and DS9060 will have a return path to ground through the transistor and are enabled. (10X LED or 1X LED is lighted depending on the type of probe or cable attached to the CH 1 OR X input connector.)

The X-Y position of A TIME/DIV switch S6111 puts −8 volts on both Channel 1 and Channel 2 scale-factor LED-enabling transistors Q5017 and Q5241 through blocking diodes CR5115 and CR5116. This allows the appropriate scale-factor LED to be illuminated on both CH 1 and CH 2 (10X or 1X).

With either a coaxial cable or 1X probe attached to the CH 1 OR X input connector, the probe-coding ring portion of the input connector is not contacted. Q5057 will be biased off by the −8 volts through R5055. A voltage divider network composed of R5053, R5041, R5042, and R5052 between Q5017 and the −8 volt supply will bias Q5056 into conduction; the 1X LED in series with Q5056 will be on. The 10X LED is in parallel with R5053, and the voltage drop across R5053 will not be sufficient to cause the 10X LED to light.

When a 10X probe equipped with a scale-factor-switching connector is attached to the CH 1 OR X input connector, the probe coding ring will be contacted. The base of Q5057 will now be connected to ground through R15102 and an internal resistor located within the probe connector body. A bias voltage divider is formed, biasing Q5057 into saturation. The collector of Q5057 will drop to about −7.2 volts. This voltage level is enough to light the 10X LED, and when it is applied to the Q5056 base bias voltage divider composed of R5042 and R5052, it is sufficient to bias Q5056 off and turn off the 1X LED.

VERTICAL OUTPUT AMPLIFIER 5

Introduction

The Vertical Output Amplifier circuit provides the final amplification for the vertical deflection signal. The circuit includes the Delay Line, part of the Beam Finder circuitry, and part of the Trace Separation circuitry. Pushing the BEAM FIND button compresses an overscanned display to within the viewing area. The Trace Separation circuit provides vertical positioning of the B trace when the ALT Horizontal Display mode is selected.

Delay Line

Delay line DL11405 (Diagram 3) provides approximately 120 nanoseconds delay of the vertical signal to allow the Sweep Generator circuits sufficient time to initiate a sweep before the vertical signal reaches the deflection plates of the crt. When using internal triggering, the instrument is allowed to display the leading edge of the signal originating the trigger pulse. Resistors R2214 (R2206 below SN B030000) and R2218 (R2202 below SN B030000) provide forward termination for the Delay Line.

Input Amplifier

The Input Amplifier consists of integrated circuit amplifier U2225 (U2210 below SN B030000) and the frequency compensation network connected across pins 2 and 3. Gain Adjust R2025 (R2005 below SN B030000) sets the gain of the amplifier. BEAM FIND switch S4075, when pressed, reduces the dynamic swing capabilities of the stage, thereby limiting the display to within the display area on the crt.

Trace Separation

During B sweep the Trace Separation circuit (Q2115, Q2306, and Q2308) is enabled by the alternate pulse on

http://manoman.sqhill.com

the base of Q2115. This switches Q2115 on and Q2105 off. This switching action allows the B trace to be vertically positioned independently of the A trace. Normally, Q2105 provides a constant amount of current to U2225; however, when in ALT mode, turning Q2115 on supplies current through Q2306 and Q2308. The TRACE SEP control supplies the variable voltage at the base of Q2308 and determines the position of the B sweep display relative to the A sweep display.

The current supplied to U2225 must remain constant so that the A sweep display positioning is not affected. U2005 senses the voltage at the base of Q2308 and compensates by raising or lowering the voltage at the base of Q2306. Potentiometer R2117 centers the B trace around the A trace so that the B trace moves equally above and below the A trace.

For instruments below SN B030000 transistors Q2140 and Q2130 receive a variable current from R14498 (Diagram 13), the TRACE SEP control. The Trace Separation circuit is enabled during B sweep whenever the ALT Horizontal Display mode is selected. Q2140 and Q2130 supply an offset current to the signal current from U2210 during the B sweep. The offset current is not supplied during A sweep. The switching action allows the B sweep display to be vertically positioned independently from the A sweep display.

Output Amplifier

Integrated circuit U2255 (U2260 below SN B030000) is a multi-stage cascode amplifier cell that provides the final amplification for the vertical signal. The input signal is applied push-pull between pins 1 and 5, and the output signal is taken from pins 9 and 12. Integrated circuit amplifier U2385 (U2480 below SN B030000) monitors the emitter currents of the output transistors and automatically sets the dc levels of the output stage to obtain the maximum undistorted gain from U2255 (U2260 below SN B030000).

A AND B TRIGGER GENERATORS ◇6

Introduction

The Trigger Generator circuits produce trigger pulses to start the Sweep Generator circuits. These trigger pulses are derived either from the internal trigger signal (sampled from the vertical deflection system), an external signal connected to the external trigger connectors, or a sample of the line voltage applied to the instrument. Controls are provided in each circuit to select trigger level, slope, coupling, and source.

An A Trigger View Amplifier is provided which amplifies the external A Trigger signal for application to the Trigger View Diode Gate where it may be selected for viewing. The trigger view display provides a method of making a quick and convenient check of the external trigger signal being used to trigger the A Sweep Generator. The external trigger input signal may be continually monitored by selecting the A TRIG VIEW Vertical Mode.

Since the A and B Trigger Generator circuits are virtually the same, only the A Trigger Generator circuit action and the differences between the A and B Trigger Generator circuits are described.

Trigger Source

Trigger SOURCE switch S7312 selects the source of the trigger signal. The sources available to the A Trigger Generator circuit are the signal(s) being displayed (NORM), Channel 1 (CH 1), Channel 2 (CH 2), LINE, and EXT. The EXT/10 (A trigger circuit only) position attenuates the external trigger signal by a factor of 10. The B Trigger SOURCE switch does not have a LINE or an EXT/10 position, but has a STARTS AFTER DELAY position.

The STARTS AFTER DELAY position of the B Trigger SOURCE switch is used in conjunction with the DELAY TIME POSITION control. When STARTS AFTER DELAY is selected as a trigger source for the B Sweep, the B Sweep will begin to run immediately after the delay time selected by the DELAY TIME POSITION control has elapsed.

In the LINE mode of triggering, a sample of the power line frequency is obtained from the secondary of power transformer T14500 located in the Low Voltage Power Supply circuit. To prevent unwanted attenuation of the trigger signal by the LF REJ circuit, the A Trigger COUPLING switch should not be in LF REJ when using line voltage as a trigger source.

Trigger Coupling

The Trigger COUPLING switches offer a means of accepting or rejecting certain components of the trigger signal. In the AC, LF REJ, and HF REJ mode of trigger coupling, the dc component of the trigger signal is blocked by coupling capacitors C7313 or C7317. Frequency components below 60 hertz are attenuated when using AC coupling, and components below about 50 kilohertz are attenuated when using LF REJ coupling. The higher frequency components of the trigger signal are passed without attenuation. In the HF REJ mode of trigger coupling, the high-frequency components of the trigger signal (above about 50 kilohertz) and low-frequency components (below 60 hertz) are attenuated, while the remaining frequency components are passed with minimal attenuation. The DC mode of trigger coupling passes all signals from dc to at least 100 megahertz without attenuation.

http://manoman.sqhill.com

Input Source Follower

Transistor Q7324A is a field-effect transistor (FET) source follower. It provides both a high input impedance for the trigger signal and isolation between the Trigger Generator circuit and the trigger signal source. Diode CR7322 provides input protection for Q7324A if an excessively high amplitude negative-going input signal is present. If a high-amplitude positive signal is applied, the source-gate junction of Q7324A becomes forward biased and clamps the voltage at that level. The second FET of the matched pair (Q7324B) is a high-impedance, constant-current source for Q7324A. Since both FETs are matched and mounted in the same heat sink, both will display equal temperature effects, and Q7324B will provide temperature compensation for Q7324A.

Paraphase Amplifier

U7331 is a paraphase amplifier stage that converts the single-ended input from Source Follower Q7324A into a push-pull output applied to the Tunnel Diode Driver stage. Trigger Level Centering adjustment R7224 sets the level at pins 14 and 15 of U7331 so that the display is correctly triggered when the LEVEL control is centered. LEVEL control R17305 varies the level at pins 14 and 15 of U7331 to select the point on a trigger signal where triggering occurs.

The slope of the input signal that triggers the Sweep Generator circuit is determined by the setting of SLOPE switch S17305. When the SLOPE switch is set to the + position, the output signal present at pin 8 of U7331 is in phase with the input signal, and the output signal at pin 9 is inverted with respect to the input signal. When the SLOPE switch is set to the − position, the output signal at pin 8 is inverted with respect to the input signal, and the output signal at pin 9 is in phase with the input signal.

Tunnel Diode Driver

Transistors Q7344 and Q7345 are common-emitter amplifier stages that provide signal currents necessary to switch the Trigger Firing tunnel diodes. CR7350 and CR7349 are approximately 4.7 milliamp tunnel diodes. Quiescently, CR7349 and CR7350 are biased into their low-voltage states. Q7344 cannot provide sufficient current to switch CR7349 to its high voltage state. However, Q7345 can provide sufficient current to bias CR7350 into its high voltage state. When Q7345 conducts triggering signal current, the anode of CR7350 steps positive to approximately +0.5 volt. Since only approximately 1 milliamp of current is required to maintain CR7350 in its high-voltage state, this makes approximately 3 milliamps of additional current available with which to switch CR7349 to its high-voltage state. Thus, the next time Q7344 conducts signal current, CR7349 steps to its high-voltage state, sending a positive pulse to the logic circuit to initiate sweep action. The A Trigger Sensitivity adjustment, R7348, adjusts the tunnel diode bias to a level that will not allow CR7349 to be switched to its high-voltage state until CR7350 has been switched to its high-voltage state. At the end of the sweep time and during holdoff, a negative level is applied to the anode of CR7350, thereby resetting both CR7349 and CR7350 to their low voltages states. The reset level remains during holdoff time to ensure that a sweep gating signal will not be generated until the sweep circuit has returned to its quiescent state.

Trigger View Amplifier

Transistors Q7424 and Q7422 make up half of a cascode, push-pull amplifier. In the Vertical Switching Logic circuit (Diagram 3), Q1235 and Q1225 form the rest of the Trigger View Amplifier. The Trigger View Amplifier requires that the A Trigger SOURCE switch be set to EXT or EXT/10 and the A TRIG VIEW Vertical Mode be selected before the amplifier is enabled to pass the external trigger signal to the Diode Gate and on to the Vertical Output Amplifier. If the trigger view display is selected, the Vertical Switching Logic circuit will turn on the Trigger View Diode Gate during the proper time to pass the signal on to the Delay Line Driver.

A sample of the push-pull external trigger signal is taken from pins 1 and 16 of U7331 and amplified by Q7424 and Q7422. The Trigger View Centering control (R7526) is used to vertically position the trigger view display. R7439 is adjusted to set the gain of the Trigger View Amplifier, and C7425, L7525, C7529, and R7423 provide HF compensation. Diodes VR7520, CR7521, and CR7536 are used to clamp the collectors of Q7424 and Q7422 to approximately +5.7 volts whenever Trigger View is disabled. Q1225 and Q1235 will be reverse biased during this time.

SWEEP AND Z AXIS LOGIC CIRCUIT ◇7

Introduction

The Sweep and Z-Axis Logic circuit, shown in Figure 3-6, develops the logic levels necessary to control the sequence of events associated with sweep generation and crt unblanking. The A and B +Gate signals are also generated in this circuit.

A Sweep Gate

The A Sweep Gate circuit is comprised of Q7254 and Q7256. They form an emitter-coupled stage where only one transistor can be conducting at any time. The input signal to the stage is the positive-going trigger signal from the A Trigger Firing tunnel diode in the A Trigger Generator circuit. The signal at the collector of Q7254 is connected to the A Sweep Z-Axis Gate circuit to control the crt unblanking and to generate the A +Gate signal. The signal at the collector of Q7256 is connected to the emitter of Sweep Disconnect Amplifier Q4497 in the A Sweep Generator circuit to initiate A Sweep generation.

http://manoman.sqhill.com

B Sweep Gate

The B Sweep Gate circuit is comprised of Q7053 and Q7055. These transistors also form an emitter-coupled stage where only one transistor can be conducting at any time. The input signal to the stage is the positive-going trigger signal from the B Trigger Firing tunnel diode in the B Trigger Generator circuit. The signal at the collector of Q7053 is connected to the B Sweep Z-Axis Gate circuit (Q7093 and Q7095) to control crt unblanking and to generate the B+Gate signal. The signal at the collector of Q7055 is connected to the emitter of Sweep Disconnect Amplifier Q4565 in the B Sweep Generator circuit to initiate B Sweep generation.

Sweep Control Integrated Circuit

The Sweep Control integrated circuit is U7375. Several functions are performed in this stage, depending on the mode of operation of the instrument sweep generators. The following is a brief explanation of the function associated with each pin of the IC.

Pin 1 is the positive Auto Sense input. The signal connected here comes from the A Trigger Firing tunnel diode.

Pin 2 is a reference input to the Auto Sense circuit. A fixed dc level established by R7277 and R7276 is connected here.

Pin 3 is the + auto gate terminal. In the AUTO mode of operation, if no trigger signals are applied to pin 1 of U7375 during the approximately 100 milliseconds following the end of holdoff, the gate level at pin 3 steps LO to turn Q7256 on which initiates a sweep.

Pin 4 is not used in this application.

Pin 5 is the input terminal for negative voltage supply.

Pin 6 is the auto gate timing terminal. R7272 and C7273 determine the amount of time between the end of holdoff and the generation of the auto gate.

Pin 7 output lights the TRIG LED when a triggered gate has occurred.

Pin 6 is the holdoff timing terminal. The RC network connected to this terminal (selected by the A TIME/DIV switch) determines the length of holdoff time.

Pin 9 is the ground terminal.

Pin 10 is the Holdoff output terminal. The gate level present here is LO during sweep holdoff time and HI otherwise.

Pin 11 output lights the READY LED when operating in the single sweep mode.

Pin 12 is the single sweep mode terminal. When +5 volts is applied to this terminal the sweep operates in the single sweep mode; when the terminal is left open or grounded the sweep operates in the repetitive mode.

Pin 13 is not used in this operation.

Pins 14 & 15 are the single sweep reset terminals. Pushing the SINGL SWP button prepares the single sweep circuitry to respond to the next triggering event, and also causes the READY LED to come on.

Pin 16 is the holdoff start input terminal. The HI sweep reset gate pulse from the sweep generators is applied here to initiate sweep holdoff.

Pin 17 is the sweep disable output terminal. The gate level at this terminal is HI during holdoff and LO otherwise.

Pin 16 is the sweep lockout input. +5 volts applied to this terminal disables all sweep action.

Pin 19 is the auto mode terminal. Grounding this terminal enables auto sweep operation.

Pin 20 is the input terminal for positive voltage supply.

Holdoff Timing

A resistor and capacitor network located in the A and B Timing Switch circuit connects to pin 8 of U7375 via pin 8 of J4571. Various resistor and capacitor combinations switch into the circuit, depending on the setting of the A TIME/DIV switch. At sweep end, pin 8 of U7375 is released, and the timing capacitors in the holdoff timing network start to charge. Q7465 is biased off during the sweep holdoff time by a LO at pin 10 of U7375 which allows the voltage at pin 8 to rise due to charging of the timing capacitors. When the charge on the capacitors rises to approximately +4 volts at pin 8, pin 17 goes HI and pin 10 goes HI to turn on Q7465. The holdoff timing capacitors

http://manoman.sqhill.com

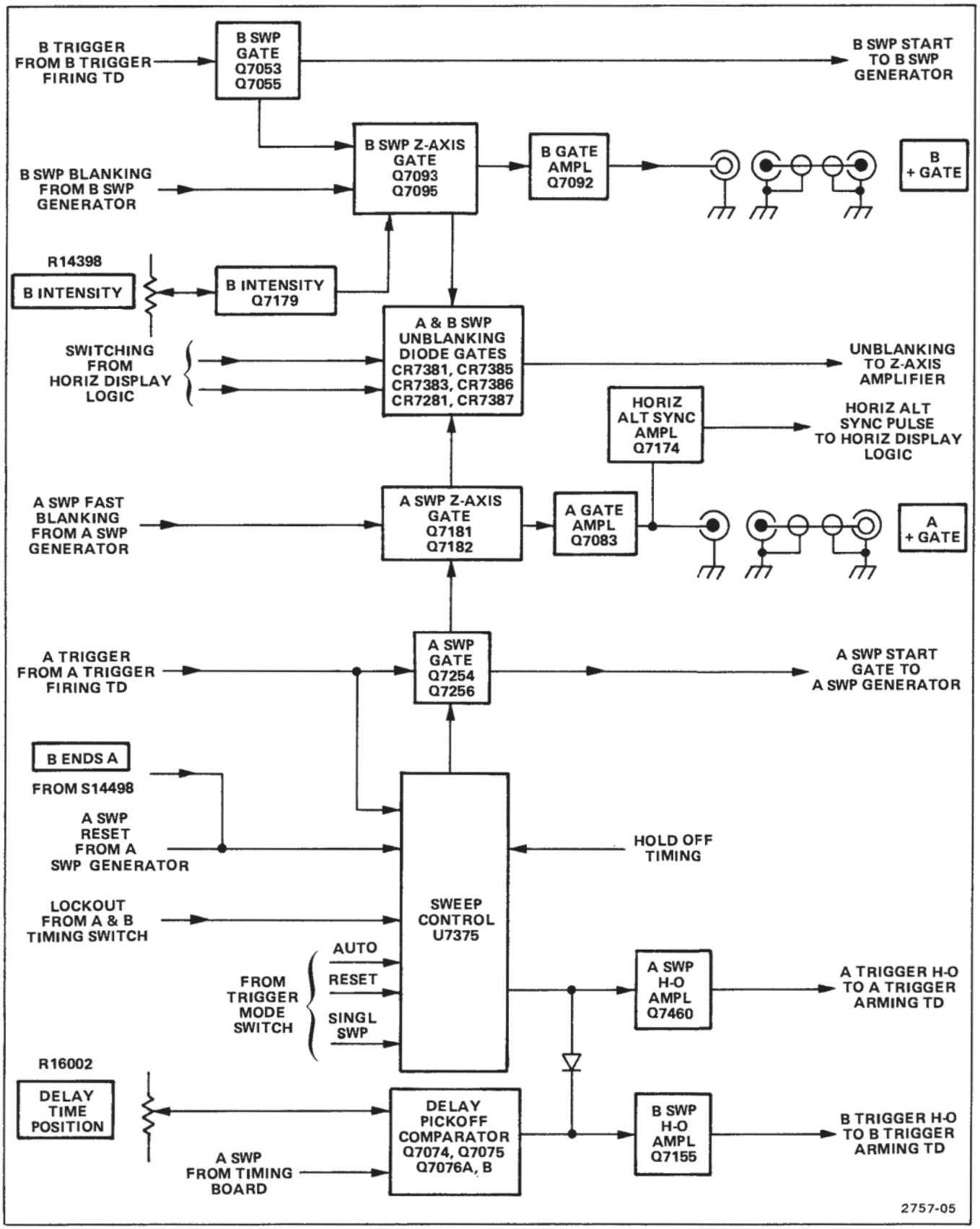

Figure 3-6. Detailed block diagram of the Sweep and Z-Axis Logic circuit.

http://manoman.sqhill.com

discharge rapidly through Q7465 as pin 8 goes LO. C6121, C6122, C6112, R6115 and R6114 in the A and B Timing Switch circuit compose the holdoff timing circuits which are switch selectable, and A Trigger HOLDOFF R14498 is a variable resistor that allows lengthening of the time constant to increase holdoff time.

A Sweep Holdoff Amplifier

The A Sweep Holdoff Amplifier is Q7460. The holdoff gate waveform from pin 17 of U7375 is applied to the base of Q7460 through R7461 and C7461. When Q7460 is turned off (during holdoff time), its collector is LO and CR7451 is forward biased, thus resetting both the Arm and Firing Trigger tunnel diodes in the A Trigger Generator. When Q7460 is turned on (any time other than holdoff time), its collector level is HI and CR7451 is reverse biased. This allows the trigger tunnel diodes in the A Trigger Generator to respond to the next adequate triggering signal.

B Sweep Holdoff Amplifier

The B Sweep Holdoff Amplifier is Q7155. Its circuit action is identical to that described for the A Sweep Holdoff Amplifier with the exception that two gate signal sources control the state of the stage. The two sources are the holdoff gate from pin 17 of U7375 (through CR7363) and the collector of Q7075 in the Delay Pickoff Comparator. Both gate sources must be in their LO state for B Sweep to be triggerable. Either source in its HI state will disable the B Trigger Generator tunnel diodes.

A Sweep Z-Axis Gate

Q7181 and Q7182 comprise the A Sweep Z-Axis Gate. They form an emitter-coupled stage where only one transistor can be conducting at any time. The controlling signals consist of inputs from the collector of Q7254 in the A Sweep Gate, the unblanking signal from Q4582 in the A Sweep Generator, and Q4492 in the Horizontal Display Logic circuit. The unblanking signal for use in the Z-Axis Amplifier is taken from the collector of Q7182 (through CR7387). The collector signal of Q7181 is applied to the A +Gate Emitter Follower (Q7083).

The Horizontal Display Logic circuit controls the bias voltage on CR7281. When the diode is reverse biased, as it is for all horizontal modes except for B DLY'D, −8 volts is connected to the anode of CR7281 through Q4492. This allows the gate signal at the collector of Q7182 to pass through CR7387 creating the unblanking signal to the Z-Axis Amplifier. In the B DLY'D mode, Q4492 is turned off and CR7281 is forward biased through R7281 to the +5 volts supply. CR7387 will now be reverse biased, and the A unblanking signal is blocked from reaching the Z-Axis Amplifier. In the ALT Horizontal Display mode, CR7281 will be reverse biased during the A sweep and forward biased during the B sweep.

B Sweep Z-Axis Gate

The B Sweep Z-Axis Gate is comprised of Q7093 and Q7095. These transistors form an emitter-coupled stage where only one transistor can be conducting at any time. The controlling signals come from the collector of Q7053 (B Sweep Gate), and the blanking signal from the collector of Q4562 in the B Sweep Generator. The emitter current in the gate transistors is supplied partly by Q7195 which is controlled by B INTENSITY control R14398. The B INTENSITY control sets the level of the B Sweep unblanking signal to control the B Sweep intensity separately from the overall display intensity. The collector of Q7095 supplies the unblanking signal to the Z-Axis amplifier and the collector of Q7093 supplies the signal to the B +Gate Emitter Follower (Q7092).

When the A Horizontal display is selected, −8 volts from Q4491 in the Horizontal Display Logic circuit is applied to the cathode of CR7381. This reverse biases CR7383 and allows the collector of Q7095 to be pulled positive through CR7385 and R7283 to the +5 volt supply. CR7386 will be reverse biased and the B Sweep Z-Axis Gate (Q7093 and Q7095) will not affect crt unblanking. When either A INTEN, ALT, or B DLY'D Horizontal Display is selected, −8 volts is applied to the anode of CR7385 to reverse bias it and allow the Horizontal Display Logic circuit to control the B Sweep Z-Axis Gate.

In A Intensified Horizontal Display, CR7381 becomes reverse biased and CR7383 becomes forward biased. Diode CR7386 is still reverse biased, but when B Sweep starts, the collector of Q7095 steps negative enough to forward bias CR7386 and add a slight amount of unblanking to the A Sweep unblanking already present. This provides further intensification for the B Sweep portion of an A Intensified display. In ALT Horizontal Display, the Horizontal Display Logic circuit controls the A Sweep Z-Axis Gate (Q7181 and Q7182) and the B Sweep Z-Axis Gate (Q7093 and Q7095). The B Sweep unblanking signal is added to the A Sweep unblanking signal during the A Intensified display, the A Sweep unblanking signal is blocked during the B DLY'D display. In B DLY'D Horizontal Display, the A Sweep Z-Axis Gate output diode CR7387 is held reverse biased, and the only unblanking signal presented to the Z-Axis amplifier input is the B Sweep unblanking signal.

A +Gate and B +Gate Emitter Followers

Emitter followers Q7083 and Q7092 provide the A +Gate and the B +Gate output signals available at the instrument rear panel. The output signals are positive-going rectangular waveforms, approximately +5.5 volts in amplitude. The amplitude is set in the collectors of Q7181 and Q7093. For example, when Q7181 is conducting, the base of Q7083 can go no more negative than approximately −0.7 volt (limited by CR7078). When Q7181 is not conducting, the base of Q7083 rises to the +5 volts power

http://manoman.sqhill.com

supply level through R7184. Diodes CR7084, CR7085, CR7097, and CR7098 provide protection against accidental application of damaging voltage levels to the A +Gate and B +Gate output connectors.

Horiz Alt Sync Pulse Amplifier

The pickoff amplifer for the Horiz Alt Sync pulse is Q7174. It is biased into saturation, so its quiescent output voltage is approximately zero. A sample of the A +Gate is coupled to the base of Q7174 by C7174 where the positive-going gate is integrated by the action of C7174 and R7171. The positive-going portion of the integrated signal cannot increase the collector current of Q7174 beyond its saturation level, so no signal output is obtained. When the A +Gate negative-going edge occurs, C7174 cannot change its charge instantaneously so the entire negative transition is felt on the base of Q7174 across R7171. The negative peak of the signal is enough to cutoff Q7174, and the collector voltage rises in response to the base voltage decrease. The base voltage rapidly returns to a positive level, and the transistor again saturates, ending the Horiz Alt Sync pulse.

A AND B SWEEP GENERATORS 8

Introduction

The A and B Sweep Generators produce sawtooth voltages which are amplified by the Horizontal Amplifier circuit to provide horizontal deflection on the crt. These sawtooth voltages are produced on command (Sweep start gate) from the Sweep Logic circuits. The Sweep Generator circuits also produce gate waveforms that are used by the Z-Axis Logic circuit to unblank the crt during sweep time and by the Sweep Logic circuit to terminate sweep generation. Figure 3-7 shows a detailed block diagram of the A Sweep Generator circuit that will be described in the following discussion. Since the B Sweep Generator circuit is very similar to the A Sweep Generator, the only discussion of the B Sweep Generator will be on the differences in operation between the two.

Disconnect Amplifier

After holdoff, but before the next sweep, Disconnect Amplifier Q4497 is biased on and conducts through R4587 and R_t back to $+V_t$. This sets the charge on C_t in preparation for the beginning of the next A Sweep and prevents current from the Miller Integrator circuit from

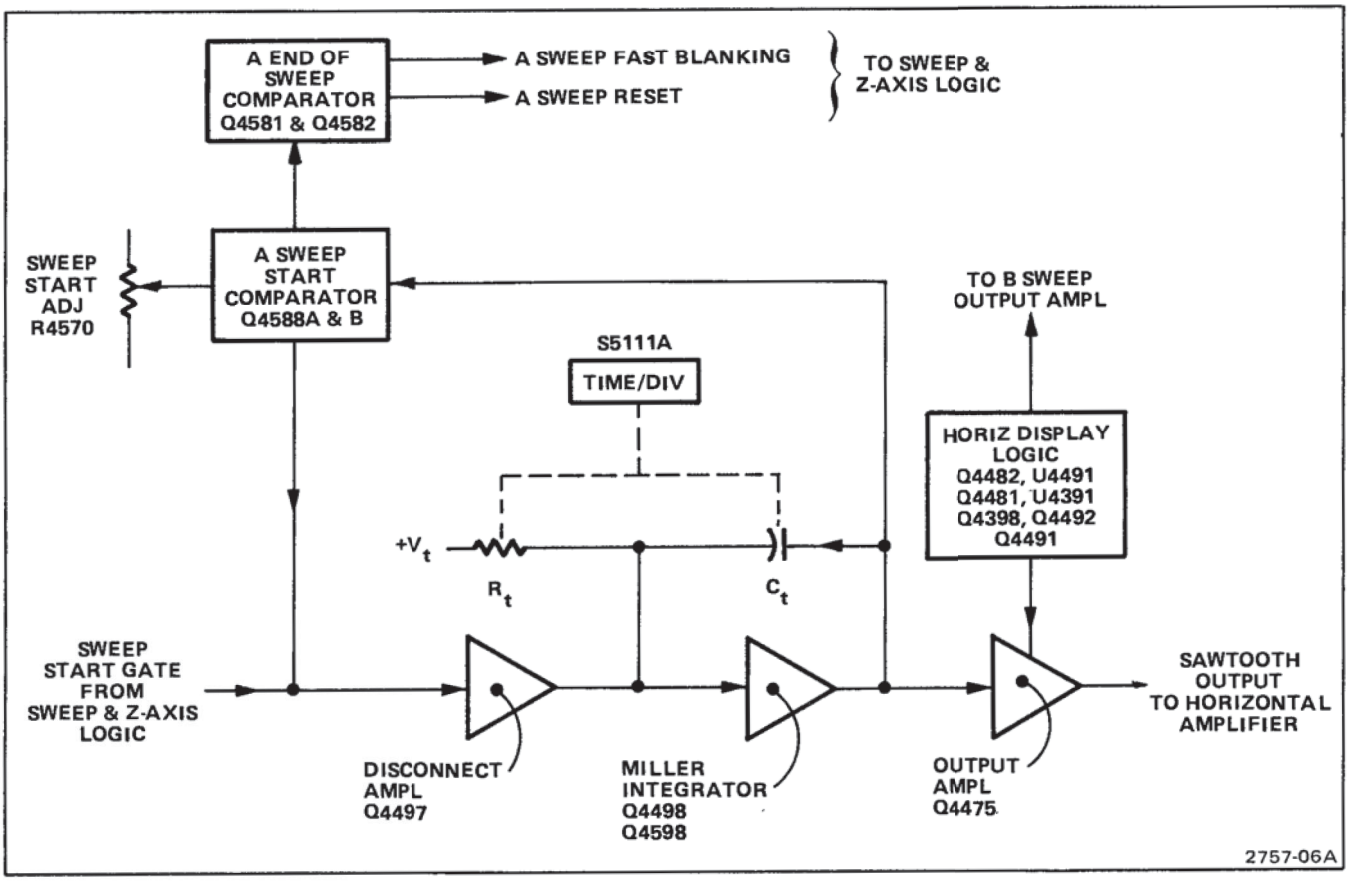

Figure 3-7. Detailed block diagram of the A Sweep Generator circuit.

http://manoman.sqhill.com

changing the charge on C_t. When the positive-going A Sweep Start Gate is applied to the emitter of Q4497, CR4592 becomes forward biased and turns off Q4497. Now the A Sweep starts, and the Miller Integrator circuit begins to change the charge on C_t. Q4497 will remain off until retrace is initiated and the A Start Sweep Gate is removed. Then Q4497 will become forward biased again, and C_t will rapidly charge to its quiescent value for the start of the next A Sweep.

Sawtooth Generator

The Miller Integrator circuit is comprised of Q4498 and Q4598. It works on the principle that if the charging current to a capacitor can be held constant, then the charging curve will be linear rather than exponential. The action starts when Disconnect Amplifier Q4497 is turned off by the A Sweep Start Gate. The selected capacitor for the chosen setting of the TIME/DIV switch (C_t) begins to charge through the R_t. This causes the junction of C_t and R_t to start positive in the direction of $+V_t$, thereby causing the gate of Q4498 to start positive. The Q4498 source then starts in a positive direction and increases the forward bias on Q4598 causing the collector voltage to move in a negative direction (less positive). This couples back through C_t and opposes the positive change at the gate of Q4498. Capacitor C_t is attempting to charge toward $+V_t$, but the action of Q4498 gate being held virtually constant, and the collector of Q4598 going more negative, results in the reduction of the charge on C_t (it discharges). The gate of Q4498 rises positive about 10 millivolts over the entire sweep generation time. Since the voltage at the gate of Q4498 remains relatively constant, both the voltage across R_t and the current through R_t (the current discharging from C_t) remain constant. The linear rate of discharge of C_t results in a linear ramp across it. The resultant output at the collector of Q4598 appears as a negative-going ramp, dropping from approximately +13 volts to approximately +2 volts.

When the ramp reaches +2 volts, Q4581 sends a pulse to U7375 initiating retrace. Transistor Q4497 turns on, and its collector goes more negative. This moves the gate of Q4498 in the negative direction, causing the voltage on the base of Q4598 to go more negative, thereby causing its collector voltage to go more positive. Now C_t charges rapidly through Q4497 to its quiescent state in preparation for the next A Sweep start gate.

Output Amplifier

The Output Amplifier is a common-base amplifier with the signal current-driven into the emitter. It provides the output sawtooth current signal to the Horizontal Amplifier and provides a measure of isolation between the Sawtooth Generator and the Horizontal Amplifier. The Horizontal Display Switching circuit connects to this stage and controls the A sawtooth output in the various horizontal modes of operation. In the A and A INTEN modes of operation, the A sweep signal passes through Q4475 to the Horizontal Amplifier. In the ALT mode, Q4475 is enabled for the A sweep and turned off for the B sweep by the Horizontal Display Logic circuit. In the B DLY'd mode, Q4475 is held off, and Q4465 in the B Sweep Generator is held on to pass the B sweep sawtooth to the Horizontal Amplifier.

A Sweep Start Comparator

Just before the sweep starts to run down, the levels at the bases of Q4588A and Q4588B are approximately equal. When the sweep starts to run down, the base of Q4588B goes negative, following the collector of Q4598. This increases the forward bias on CR4581 which in turn decreases the forward bias on CR4582. Very shortly after start of the sweep, CR4582 becomes reverse biased and interrupts the current through Q4588A. The circuit remains in this condition until after the sweep retrace is complete. When the circuit returns to quiescence, Q4588A again begins to conduct through R4587. This sets the currents through Q4497, establishing the starting point for the sweep. Sweep Start adjustment R4570 sets the base level of Q4588A. This level is also connected to the base of Q4565 in the B Sweep Generator to ensure that the B sweep starts at the same level as the A sweep.

A Sweep End of Sweep Comparator

The A Sweep End of Sweep Comparator is a switching circuit comprised of Q4581 and Q4582. At quiescence, Q4582 is conducting and Q4581 is turned off. When the sweep starts to run, the negative-going ramp at the collector of Q4498 is coupled through the base of Q4588B and through CR4581 to the cathode of CR4577. When the collector of Q4498 reaches about +2 volts, the cathode of CR4577 reaches about +4 volts. CR4577 begins conducting and turns on Q4581, which then turns off Q4582. The resulting positive step at the collector of Q4581 is fed to pin 16 of U7375 where it is used to initiate retrace and holdoff. The negative-going pulse at the collector of Q4582 is applied to the A Sweep Z-Axis Logic Gate to blank the crt as soon as a sweep-end command is generated.

B Sweep Generator Differences

There are two main differences between the A Sweep Generator and the B Sweep Generator. The first is that Q4545 is used as a constant current source in the B Sweep Start Comparator circuit. The second is that one of the outputs of the B Sweep Generator is controlled by the B ENDS A switch associated with the A Trigger HOLDOFF control. In the B ENDS A position, the end of the B sweep also ends the A display on the crt.

http://manoman.sqhill.com

Horizontal Display Switching

Switching transistors Q4482 and Q4481 are controlled by the Horizontal Display Logic circuit. They are switched off and on as required to allow A sweep output transistor Q4475 and B sweep output transistor Q4465 to pass the A or B sawtooth to the Horizontal Amplifier.

When HORIZ DISPLAY is set to A, a LO on the base of Q4481 keeps the transistor biased off. The A sawtooth is allowed to pass to the emitter of Q4475 to be amplified and sent to the Horizontal Amplifier. A HI on the base of Q4482 turns it on, and the B sawtooth passes to ground through the transistor, thereby preventing the B sawtooth from going to the Horizontal Amplifier. The same conditions exist when the HORIZ DISPLAY is set to A INTEN. Setting the HORIZ DISPLAY to ALT will cause the Horizontal Display Logic circuit to alternately turn Q4481 and Q4482 off and on to first pass the A sawtooth and then the B sawtooth to the Horizontal Amplifier. When the HORIZ DISPLAY is set to B DLY'D, Q4482 will be biased off and Q4481 will be on. The B sawtooth will go to the Horizontal Amplifier, and the A sawtooth will be shunted to ground.

HORIZONTAL DISPLAY LOGIC ◇8◇

Introduction

The Horizontal Display Logic circuit produces the signals that switch the A and B Sweep Generators and the A Sweep and B Sweep Z-Axis Gates. It also provides a Vertical Alt Sync pulse to the Vertical Switching circuit. Switching transistor Q4398 enables the TRACE SEP potentiometer (R14498) during ALT Horizontal Display.

Vert Alt Sync Pulse

A gating circuit is formed by U4391B and U4391D to control the Vertical Alt Sync pulse. The pulse is used in the Vertical Switching circuit for clocking U1705 whenever the ALT Vertical Mode is selected. In all Horizontal Display modes except ALT, a HI at pin 6 of U4391B will put a LO at pin 3 of U4391D. Pin 2 of U4391D has the positive-going Horiz Alt Sync pulse present. This pulse is inverted through U4391D and fed to the Vertical Switching circuit. In ALT Horizontal Display mode, pin 6 of U4391B will be LO, and the signal at pin 5 will control output pin 4. The signal present at pin 6 of U4491A, which changes state with every Horiz Alt Sync pulse, now controls U4391D, and the Vert Alt Sync pulse becomes a rectangular pulse having a period equal to twice the time between Horiz Alt Sync pulses.

Trace Separation

Transistor Q4398 acts as a switch to control the enabling voltage to TRACE SEP potentiometer R14498. In the ALT Horizontal Display mode the voltage is applied to the potentiometer during the B Sweep time to supply an offset signal to Q2140 and Q2130 in the Vertical Output Amplifier. This circuit allows control of the vertical separation between the A Sweep display and the B Sweep display on the crt. During B Sweep, in ALT Horizontal Display mode, a HI will be present on pin 4 of U4391B. The HI will raise the base voltage of Q4398 to turn it on and the −8 volts on the emitter will be supplied to the TRACE SEP potentiometer.

A and B Sweep Switching

Flip-flop U4491A controls Horizontal Display Switching transistors Q4482 and Q4481 in the A and B Sweep Generators. The HORIZ DISPLAY switch S6260 sets the flip-flop input to do one of the following:

1. Turn off Q4481 and turn on Q4482 to allow the A Sweep signal to go to the Horizontal Amplifier;

2. Turn off Q4482 and turn on Q4481 to allow the B Sweep signal to go to the Horizontal Amplifier; or

3. Alternately turn the two transistors off and on to display both sweeps in ALT Horizontal Display mode.

U4491A is clocked by the Horiz Alt Sync when the Horizontal Display is set to ALT. When the Horizontal Display is set to A, A INTEN, or B DLY'D, the state of the outputs of U4491A is determined by the logic levels present at pins 1 and 4. The HORIZ DISPLAY switches set these logic levels.

Flip-flop U4491B controls the A and B Sweep Z-Axis Gate switching transistors Q4492 and Q4491. These transistors switch the bias on CR7281 and CR7381 in the A and B Sweep Z-Axis Gates to either allow the unblanking gates to pass to the Z-Axis Amplifier or block them. U4491B is controlled by both the signal on pin 5 of U4491A and the A position of the HORIZ DISPLAY switch.

HORIZONTAL AMPLIFIER ◇10◇

Introduction

The Horizontal Amplifier circuit provides the output signals to the crt horizontal deflection plates. The signal applied to the input of the Horizontal Amplifier is determined by the TIME/DIV switch and the HORIZ DISPLAY switch. This signal can come from either the sweep generators within the instrument or some external signal applied to the CH 1 OR X input connector (X-Y Horizontal Display). Horizontal positioning, X10 magnifier circuitry, and the horizontal portion of the beam finder circuitry are also contained in the Horizontal Amplifier. Figure 3-8 shows a detailed block diagram of the Horizontal Amplifier circuit.

http://manoman.sqhill.com

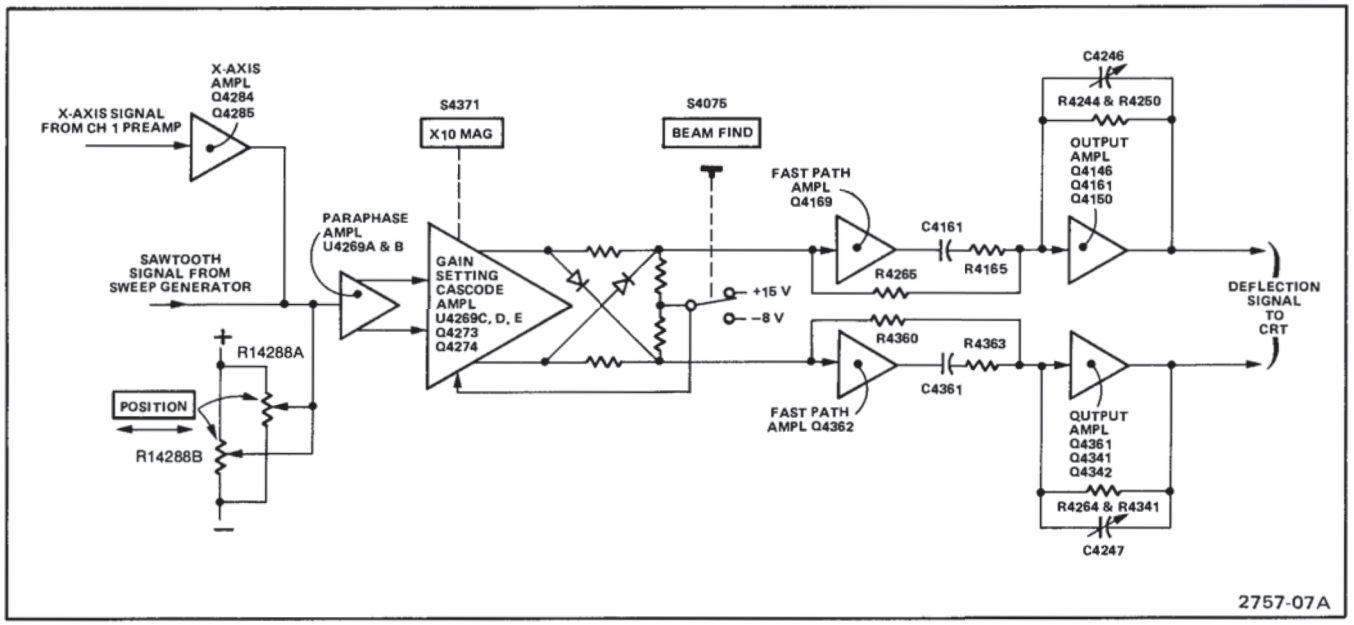

Figure 3-8. Detailed block diagram of the Horizontal Amplifier circuit.

X-Axis Amplifier

In all positions of the TIME/DIV switches except X-Y, the input signal to the base of U4269A will be sawtooth waveforms from the sweep generators. In the X-Y position, however, the sweeps are disabled, and the signal applied to Q4269A comes from the Channel 1 Preamplifier via the X-Axis Amplifier. This stage includes Q4284, Q4285 and associated circuitry.

Transistor Q4284 is connected as a feedback amplifier, with R4285 as the feedback element. The input resistance is made up of R4384 and the gain-setting adjustment of R4381. When not operating in the X-Y Horizontal Display, the base of Q4284 rises toward the +15 volt supply, but is clamped at approximately +5.7 volts by CR4287 and R4287. This reverse biases the base-emitter junction of Q4284. The base of Q4285 also rises to approximately +5.7 volts and with the junction of R4281-R4280 at approximately 0 volt, Q4285 is biased off.

When the A TIME/DIV switch is set to X-Y position (fully counterclockwise), −8 volts is applied to the junction of R4382 and R4383. In addition, +5 volts is applied to the emitter circuit of Q4285 through CR4285. This biases the X-Axis Amplifier into conduction. The +5 volts is also applied to pin 18 of U7375 in the Sweep and Z-Axis Logic circuit to disable sweep generation.

Input Paraphase Amplifier

The Input Paraphase Amplifier is comprised of U4269A and U4269B (part of a transistor array). This is an emitter-coupled amplifier stage that converts the single-ended input signal to a push-pull output signal. The signal at the collector of U4269A is opposite in phase to the input signal, while the signal at the collector of U4269B is in phase with the input signal. Thermistor RT4373 reduces its value with increases in ambient temperature to increase the gain of the stage. This compensates for slight changes in amplifier gain that occur as operating temperatures vary.

The Horizontal POSITION potentiometers, R14288A (Coarse) and R14288B (Fine), are mounted on the same shaft in a mechanical arrangement that allows R14288B to rotate about one-eighth turn in either direction before R14288A moves. The Fine Potentiometer has approximately one-tenth the range of the Coarse potentiometer.

Gain Setting Cascode Amplifier

A cascode push-pull amplifier stage is made up of Q4273, Q4274, U4269C and U4269D. The gain of the Horizontal Amplifier is controlled by adjusting the resistance connected between the emitters of Q4273 and Q4274. The X1 Gain adjustment, R4274, is used to adjust the unmagnified horizontal gain and the X10 Gain adjustment, R4373, is used to adjust the magnified horizontal gain. Magnifier Registration adjustment, R4275, is used to balance the quiescent dc current in Q4273 and Q4274 so that a center screen display does not change positions when switching between magnified and unmagnified display.

http://manoman.sqhill.com

When the BEAM FIND push button is pressed, +15 volts is removed from the junction of R4167 and R4361, and −8 volts is applied to the junction through R4075. The following actions occur:

1. The base voltage of Q4269C and Q4269D is lowered to decrease the current through the two transistors. The reduced current flow decreases the voltage drop across R4266 and R4267 and the diode clamps (CR4266 and CR4267) clamp at a much lower voltage. This action limits the horizontal deflection on the crt; and

2. R4167 and R4361 are now no longer connected to +15 volts, therefore less current flows through these resistors. This compensates for the decreased current flowing through Q4269C and Q4269D and maintains the output stage in a linear operating region.

Output Amplifier

The push-pull signal from the Gain Setting Cascode Amplifier is connected to the bases of Q4169 and Q4362, through R4265 and R4360 and on to the bases of Q4161 and Q4361. At lower sweep frequencies, the signal path is through R4265 and R4360 to the bases of Q4161 and Q4361. These transistors are inverting amplifiers whose collector signals drive the emitters of complementary amplifiers Q4146-Q4150 and Q4341-Q4343, respectively. Capacitor C4262 provides emitter peaking for fast ac signals. Capacitors C4150 and C4341 transfer part of the high-frequency signal to the emitters of Q4146 and Q4342 to maintain the gain of the output stage at high sweep speeds. Resistors R4244-R4250 and R4254-R4341 are the feedback elements, with C4246 and C4247 providing high-frequency compensation. As frequency of the sweep signal increases, the reactance of C4246 and C4247 decreases and feedback current increases. To compensate for the increase in drive required to maintain the gain of the output stage, Q4169 and Q4362 (fast-path amplifiers) increase signal current to the bases of Q4161 and Q4361. High-frequency signal current is shunted around R4265 by C4165 and R1165, and C4361 and R4363 shunt high-frequency signal current around R4369. The Output Amplifiers are limited from being over-driven by CR4267 and CR4266. If the output signal from U4269D or U4269C becomes too large, the diodes become forward biased and prevent further increase in the signal level. These diodes operate mainly to clamp the signal whenever the X10 Magnification circuitry is operating. The signal level is limited to the forward drop across the diodes plus the drop across R4266 and R4267.

CRT CIRCUIT 11

Introduction

The CRT circuit provides the voltage levels and control circuitry necessary for operation of the cathode-ray tube (crt). Figure 3-9 shows a detailed block diagram of the CRT circuit.

High-Voltage Oscillator

The high-voltage oscillator is comprised of Q14009 and associated circuitry. It produces the drive for high-voltage transformer T4015. When the instrument is turned on, transistor Q4008 is forward biased and conducts through the base circuit of Q14009 to forward bias Q14009. The increasing collector current of Q14009, through the primary winding of T4015, induces a voltage across the feedback winding. Because the feedback winding is connected to the base of Q14009 and the feedback is positive, the collector current increases rapidly toward saturation. Soon the rate of increase slows to a point where the voltage induced in the feedback winding starts to decrease. This decreases the current through Q14009, further decreasing the feedback voltage. The cycle continues until Q14009 turns off, and the magnetic field around the primary winding of T4015 starts to collapse. Transistor Q14009 is held off until the field has collapsed sufficiently to allow the base of Q14009 to become biased into conduction and the cycle is repeated.

The voltage waveform at the collector of Q14009 is a sinusoidal wave at the resonant frequency of T4015. The amplitude of sustained oscillations depends on the average current delivered to the base of Q14009. Frequency of oscillation is approximately 50 kilohertz. Fuse F4508 protects the unregulated +15 volt supply in the event the High-Voltage Oscillator stage becomes shorted. C4006 and L4006 decouple the unregulated +15 volt supply to prevent current changes (present in the High-Voltage Oscillator) from affecting the +15 volt supply.

High-Voltage Regulator

Once the output voltage from the High-Voltage Oscillator has reached its stable level after the instrument is turned on, regulation occurs as follows. A sample of the −2450 volt crt cathode supply is applied to the base of Q4228 through R4127D which, with the voltage supplied by the bias network composed of R4332, R4127C, C4327, and CR4329, sets the forward bias on Q4228. Any change in the −2450 volts changes the conduction level of Q4228 to produce a proportional dc change on its collector.

http://manoman.sqhill.com

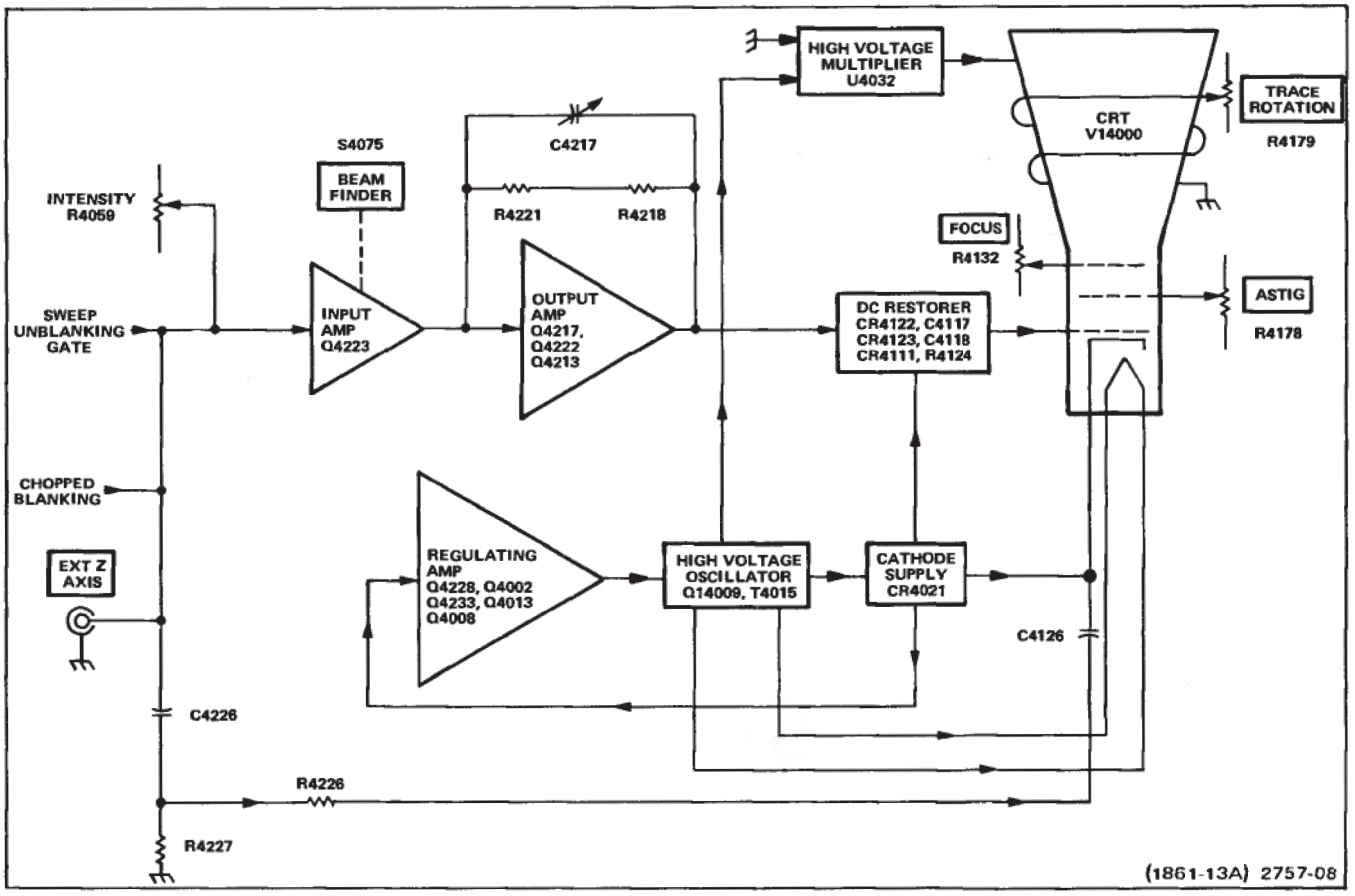

Figure 3-9. Detailed block diagram of the CRT and Z-Axis Amplifier circuits.

Assume that the −2450 volts supply starts to go positive (less negative). The positive-going change is applied to the base of Q4228 and causes the collector current to increase, which in turn, causes Q4233 and Q4008 to conduct harder. This results in greater bias current to the base of Q14009 through the feedback winding of T4015. Now Q14009 is biased closer to its conduction level, and it will conduct sooner in the oscillation cycle of T4015 to increase the average current delivered to the primary of T4015. This increases the amplitude of oscillation and induces a larger voltage into the high-voltage secondary of T4015 to correct the original positive-going change. By sampling the output of the crt cathode supply in this manner, the total output of the High-Voltage Supply is held relatively constant.

Overvoltage protection is provided by Q4002, Q4103, and associated circuitry. Normally Q4002 and Q4103 are biased off, but if the crt cathode supply voltage approaches approximately −3000 volts, the voltage level at the emitter of Q4008 will be approximately −6 volts. At this point Q4002 will be biased into conduction, which in turn biases Q4103 into conduction to reduce the forward bias on Q4008. This reduces the base drive to Q14009 in order to limit the amplitude of oscillations in T4015, and the crt cathode supply is prevented from going more negative than approximately −3000 volts.

High-Voltage Rectifiers and Output

High-voltage transformer T4015 has two secondary windings. One winding provides heater voltage for the cathode-ray tube. The heater voltage is supplied from the High-Voltage Supply, since the cathode-ray tube has a very low heater current drain, and this allows the cathode and heater of the crt to be connected together to prevent cathode-to-heater breakdown. The high-voltage winding is the source for the negative crt cathode potential and the source for High-Voltage Multiplier U4032. The crt grid bias voltage is derived by a dc-restorer circuit that uses a sample of the signal in the high-voltage winding in conjunction with dc levels supplied by both the Z-Axis Amplifier and the crt negative cathode potential.

The positive accelerating potential is supplied by High-Voltage Multiplier U4032. Regulated output voltage is approximately +15,500 volts. The negative cathode potential of −2450 volts is supplied by half-wave rectifier CR4021. Voltage variations in this supply are monitored by the High-Voltage Regulator circuit to provide a regulated high-voltage output.

http://manoman.sqhill.com

CRT Control Circuits

Focus of the crt display is controlled by FOCUS control R4132. ASTIG adjustment R4178, which is used in conjunction with the FOCUS control to provide a well-defined display, varies the positive level on the astigmatism grid. Geometry adjustment R4069 varies the positive level on the horizontal deflection plate shields to control the overall geometry of the display.

Two adjustments control the trace alignment by varying the magnetic field around the crt. Y-Axis adjustment R4072 controls current through L14165, which affects the crt beam after vertical deflection but before horizontal deflection. Therefore, it affects only the vertical (Y) components of the display. TRACE ROTATION adjustment R4179 controls the current through L14176 and affects both vertical and horizontal rotation of the beam.

Z-Axis Amplifier

The Z-Axis Amplifier circuit controls the crt intensity level from several inputs. The effect of these input signals is to either increase or decrease the trace intensity, or to completely blank portions of the display. Input transistor Q4223 is a current-driven, low input impedance amplifier. It provides termination for the input signals as well as isolation between the input signals and the following stages. Current signals from the various control sources are connected to the emitter of Q4223, and the algebraic sum of these signals determines the collector conduction level.

Transistors Q4222, Q4217, and Q4213 are configured in a feedback amplifier arrangement with R4218 and R4221 as feedback elements and with C4217 providing high-frequency compensation. Emitter follower Q4222 provides the drive to complementary amplifier Q4217-Q4213. Diodes CR4321, CR4218, and CR4115 provide protection in the event of high-voltage arcing.

The Z-axis portion of the Beam Find circuit acts on the input to the Z-Axis Amplifier. When the BEAM FIND push button is pressed, two events occur: First, +15 volts is applied to the anode of CR4144 which lifts the emitter of Q4223 sufficiently positive to ensure nonconduction of the transistor. Second, R4321 becomes connected to −8 volts through R4314 to establish a fixed and predetermined unblanking level at the output of the amplifier. Thus, the INTENSITY control and all of the input unblanking signals have no control over the intensity level of the crt display whenever the BEAM FIND push button is pressed, and a bright trace will be displayed.

DC Restorer

The DC Restorer circuit provides crt control grid bias and couples both dc and low frequency components of the Z-Axis Amplifier unblanking signal to the crt control grid. This circuit allows the Z-Axis Amplifier output to control the intensity of the crt display. The potential difference between the Z-Axis Amplifier output and the control grid (about 2465 volts) prevents direct signal coupling.

The DC Restorer circuit's ac drive is taken from the center tap of T4015. Voltage on the center tap is approximately 300 volts p-p at 50 kilohertz. A sample of this sinusoidal voltage is fed through C4010 and R4112 to the junction of CR4111, CR4112, and R4111. The Crt Bias Adjust (R4109) sets the voltage level on the cathode of CR4111 to approximately +100 volts dc. When the ac sample voltage rises to +100 volts, CR4111 becomes forward biased and clamps the junction of CR4111 and CR4112 to approximately +100 volts.

The Z-Axis Amplifier output voltage level is applied via R4113 to the anode of CR4112. This voltage level varies between +15 volts and +95 volts, depending on the setting of the INTENSITY control. The sample voltage will hold CR4112 reverse biased until the voltage falls below the Z-Axis Amplifier output level. At that point CR4112 becomes forward biased and clamps the junction of CR4111 and CR4112 to the Z-Axis Amplifier output level (see Figure 3-10). Clamping the sample between +100 volts and the positive voltage level set by the INTENSITY control produces an approximate square-wave signal with a positive dc offset level.

The DC Restorer circuit is referenced to the −2450 volts, present on the crt cathode, through R4126 and CR4123 to the junction of C4117 and CR4122. Initially, C4117 will charge to a level determined by the difference between the Z-Axis Amplifier output level and the −2450 volt reference voltage. The charging path is from the −2450 volt line, through R4126, CR4123, C4117, R4111, CR4112, and R4113 to the Z-Axis output.

Initially, C4118 will also be charged to approximately the same voltage as C4117 through R4126, CR4123, and CR4122 to the Z-Axis output.

When the sinusoidal sample voltage starts its positive transition from the lower clamped level (+15 to +95 volts) toward the higher clamped level (+100 volts), the charge on C4117 increases due to the rising voltage at the anode of CR4111. The additional charge acquired by C4117 is proportional to the amplitude of the positive transition of the clamped sample voltage.

http://manoman.sqhill.com

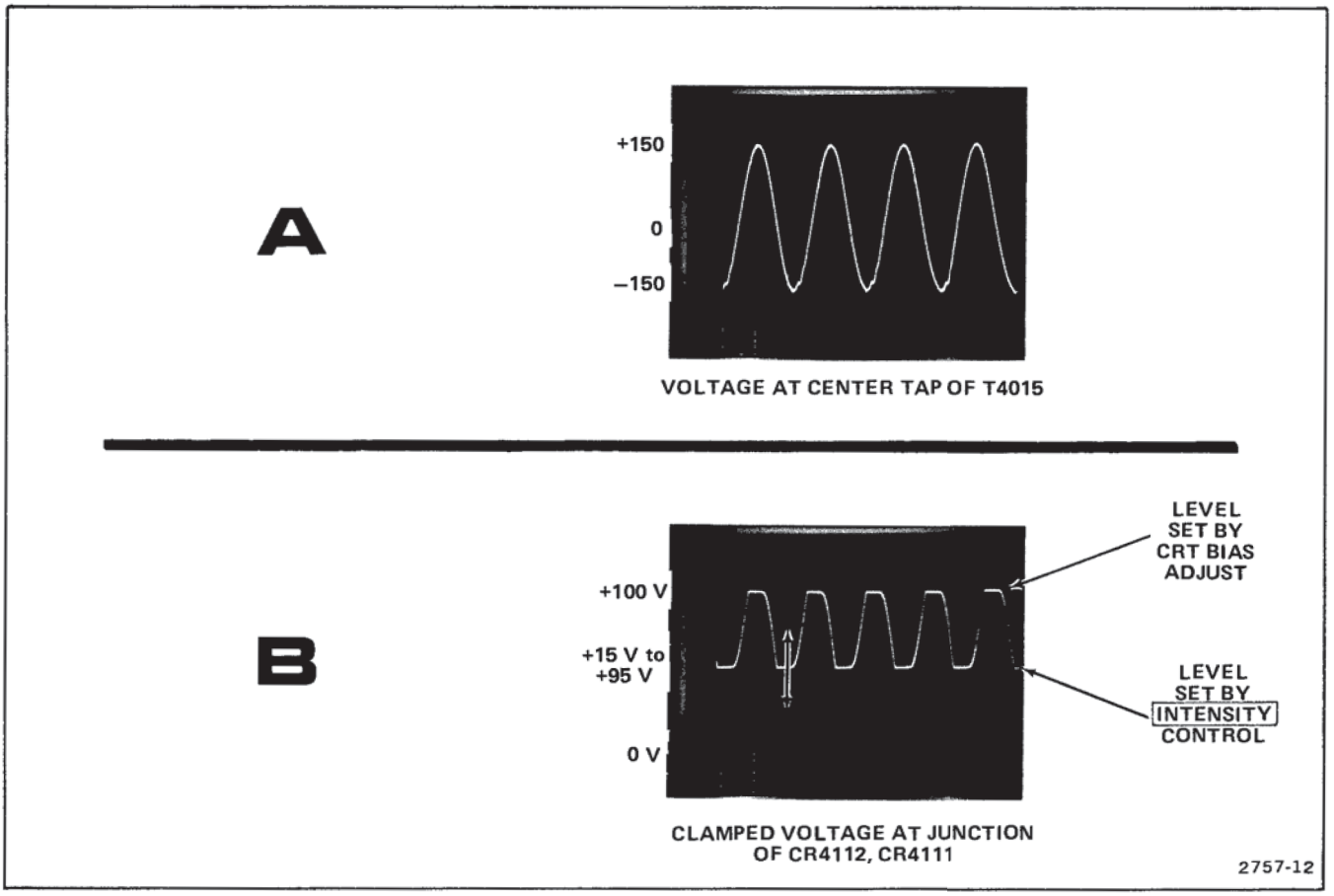

Figure 3-10. (A) Sinusoidal sample voltage at center tap of T4015. (B) Clamped sample voltage at the junction of CR4111 and CR4112.

When the sample voltage starts its negative transition from its upper clamped level toward its lower clamped level, the negative transition is coupled through C4117 to reverse bias CR4123 and forward bias CR4122. When CR4122 becomes forward biased, the charge on C4117 is transferred to C4118 as C4117 attempts to discharge to the Z-Axis output. The amount of charge that is transferred is proportional to the setting of the INTENSITY control, since the INTENSITY control sets the lower clamping level of the sample voltage from T4015 (see Figure 3-11).

If the INTENSITY control is set so the lower level of the sample voltage is clamped at +15 volts, a voltage change of approximately 75 volts is coupled through CR4122. The 75-volt negative excursion is added to the charge already present on C4118. This causes the control grid to be sufficiently negative with respect to the crt cathode to keep the crt blanked. When the INTENSITY control is set to increase the display intensity, the lower clamping level of the sample voltage is moved toward the +100 volt upper clamping level. This makes the swing of the negative transitions less, therefore less charge will be added to C4118. The voltage on the crt control grid becomes less negative with respect to the cathode and allows more beam current to flow in the crt. The more positive the lower clamping level is made, the brighter the trace on the crt.

During periods that C4117 is charging, the voltage on the control grid is held constant by the filter action of C4118 as it discharges through R4124 back to the −2450 volt line. R4124 is a very high resistance, so the RC time constant of C4118 and R4124 is long in respect to the frequency of the sample voltage from T4015. Whatever charge is leaked off of C4118 during the positive transitions of the sample voltage will be replaced by C4117 when the sample voltage makes its negative transitions.

The fast rise and fall of the unblanking pulses from the Z-Axis Amplifier are coupled by C4118 to the control grid to start the crt beam current change. The DC Restorer output level then follows the Z-Axis output level to set the new bias level on the control grid.

In the event of a failure that causes a loss of potential on either the control grid or the cathode, protection against arcing is provided by DS4124 and DS4125.

http://manoman.sqhill.com

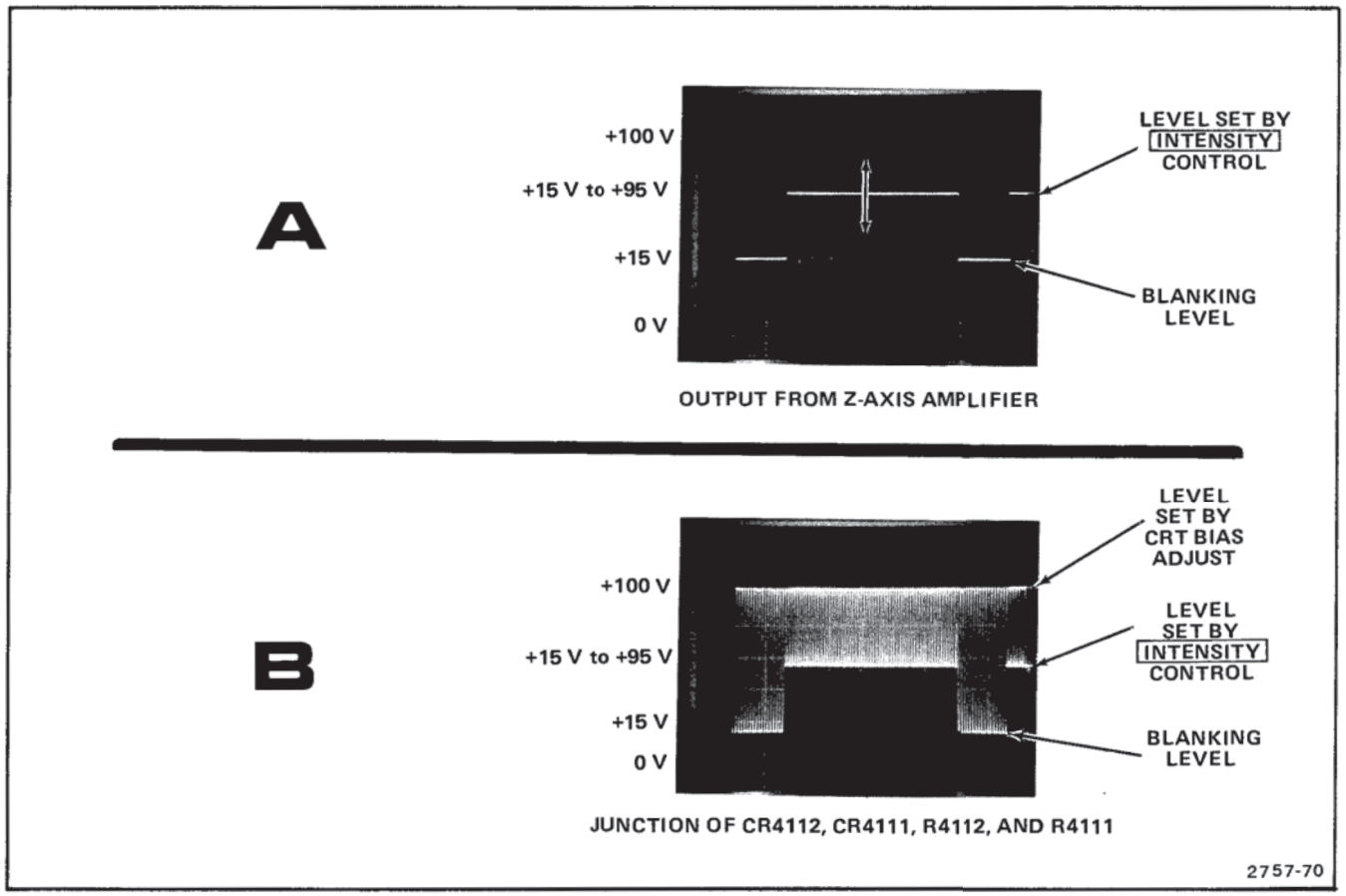

Figure 3-11. (A) Z-Axis Amplifier output. (B) Clamped sample voltage at the junction of CR4111 and CR4112.

CALIBRATOR 13

Introduction

The Calibrator circuit produces a square-wave output signal with accurate voltage and current amplitudes. This output is available as both a voltage and a current at the CALIBRATOR current loop on the instrument front panel. Figure 3-12 shows a detailed block diagram of the Calibrator circuit.

Multivibrator

Transistors Q4182 and Q4196 and associated circuitry are configured as an astable multivibrator. The basic frequency of the multivibrator is approximately I kilohertz and is primarily determined by the resistance and capacitance of C4187, R4186, R4191, R4184, and R4185. Transistors Q4182 and Q4196 alternately conduct, producing a square-wave output signal. This output is taken from the collector of Q4196.

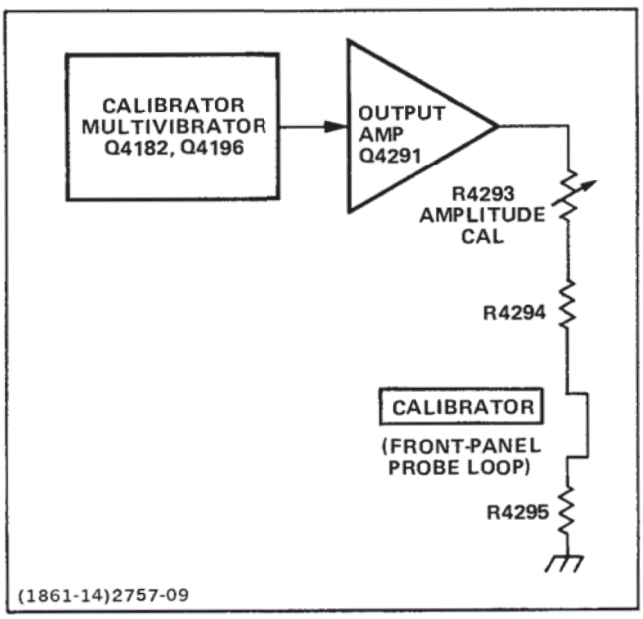

Figure 3-12. Detailed block diagram of the Calibrator circuit.

http://manoman.sqhill.com

Refer to Figure 3-13 for the following discussion. At t_0 assume that the circuit is operating and has reached its normal operating conditions. Also assume Q4182 is off and Q4196 is on. At t_0, the emitter of Q4182 is at approximately +9 volts, and the emitter of Q4196 is at +7.5 volts with its base at approximately +7.0 volts. From t_0 to t_1, C4187 charges toward the +55 volt supply through R4186. When the emitter of Q4182 reaches +15.6 volts, Q4182 becomes forward biased. At t_1, the collector of Q4182 rises to approximately +14.6 volts, and since the base of Q4196 is directly connected to the collector of Q4182, Q4196 is cut off.

Now C4187 charges in the opposite direction. At t_1, as C4187 starts charging through R4191 and Q4182, the emitter of Q4196 rises from +7.6 volts to approximately +14.6 volts. When +14.6 volts is reached at t_2, Q4196 begins to conduct, reducing both the charging current through C4187 and the collector current of Q4182. At t_2 the collector voltage of Q4162 drops in a negative direction and Q4196 conduction increases. The emitter of Q4196 drops from +14.6 volts to +7.6 volts. This negative transition is coupled through C4187 to the emitter of Q4182 to cut Q4162 off and the cycle repeats itself.

Output Amplifier

The output signal from the Multivibrator drives Output Amplifier Q4291 to produce a square wave at the output. When the base of Q4291 goes positive, the transistor is cut off and its collector voltage drops to zero. When the base goes negative, Q4291 is biased into saturation, and the collector voltage rises in a positive direction to about +5 volts. Amplitude adjustment R4293 is used to adjust the resistance between the collector of Q4291 and ground to control the amount of current allowed to flow. This in turn determines the voltage developed across R4295. The output voltage, at the calibrator current loop on the 465B oscilloscope, is 300 millivolts ±1.0% and the output current is 30 milliamps ±2.0%.

LOW-VOLTAGE POWER SUPPLY 12

Introduction

The Low-Voltage Power Supply circuit provides the operating power for this instrument from five regulated supplies and one unregulated supply. Regulation provides stable, low-ripple output voltages. Figure 3-14 shows a detailed block diagram of the Power Supply circuit.

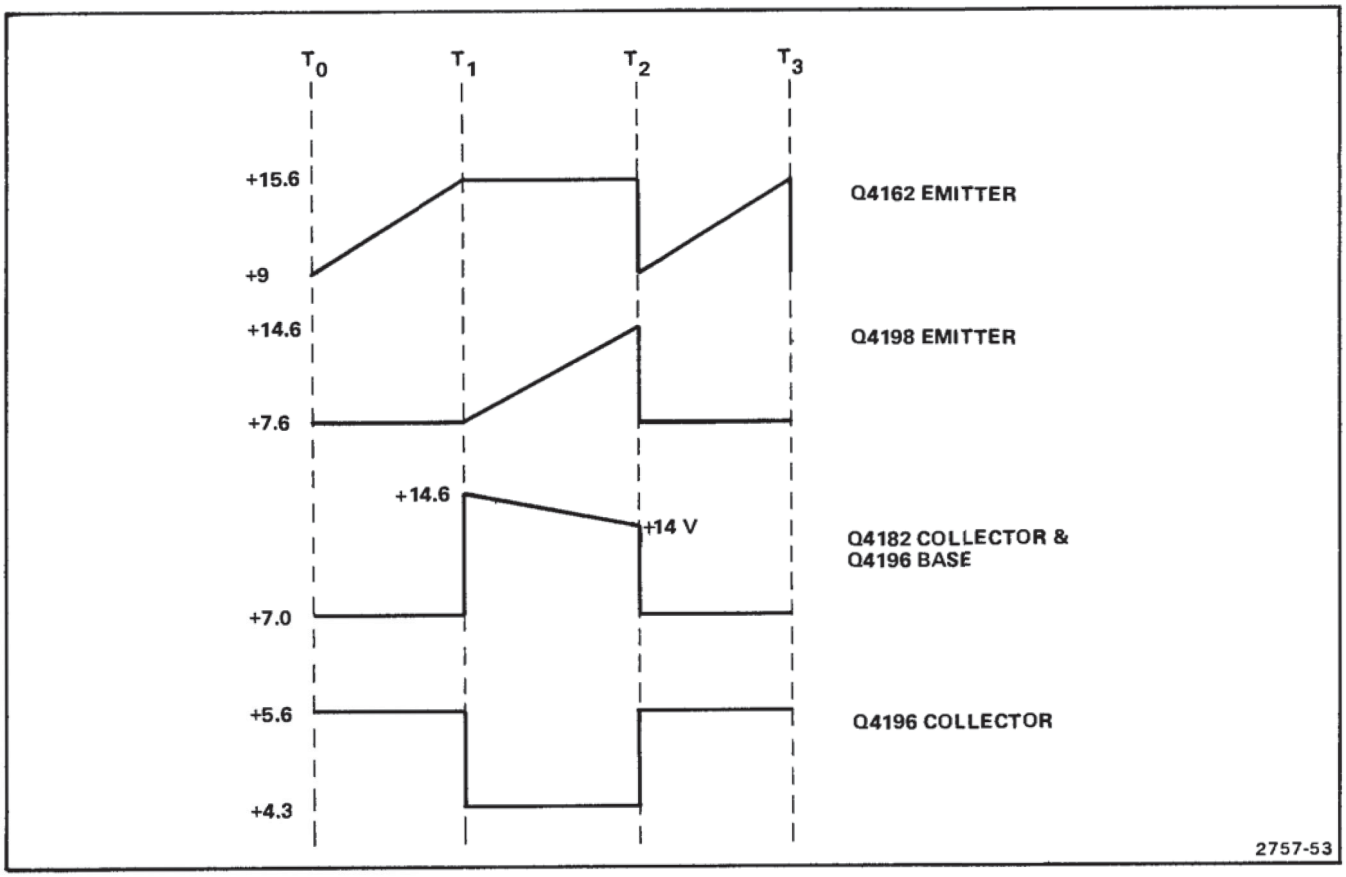

Figure 3-13. Calibrator circuit waveform diagram.

http://manoman.sqhill.com

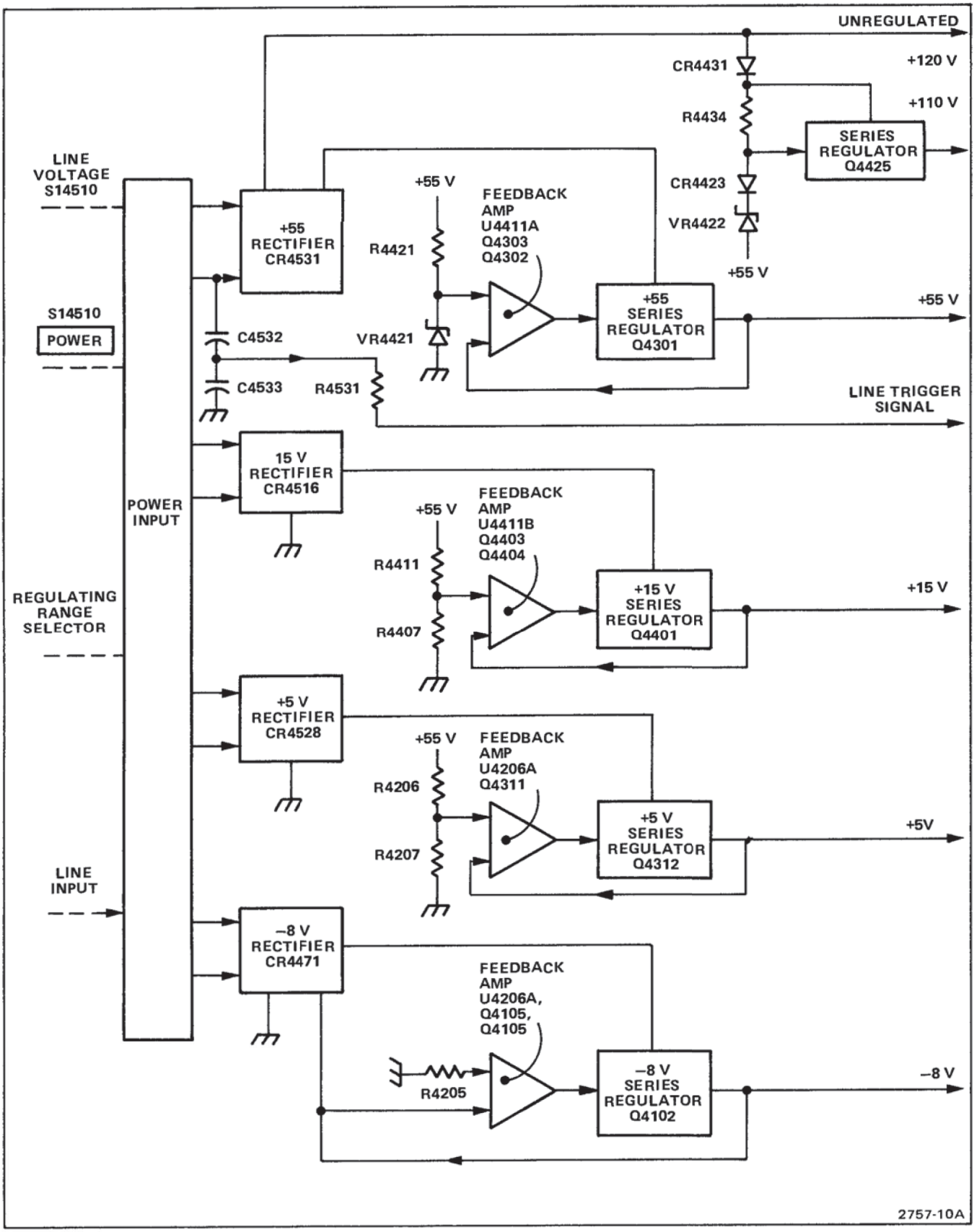

Figure 3-14. Detailed block diagram of the Low-Voltage Power Supply circuit.

http://manoman.sqhill.com

Power Input

Power is applied to the primary of transformer T14500 through Line Fuse F14500, POWER switch S14510, Thermal Cutout S14520, Line Voltage Selector switch S14500, and the Regulating Range Selector assembly. Line Voltage Selector switch S14500 connects the split primaries of T14500 either in parallel for 115-volt nominal operation or in series for 230-volt nominal operation. Line Fuse F14500 value is selected to provide the required protection for each nominal line voltage. Refer to Replaceable Electrical Parts list for correct fuse values.

The unused windings between pins 10, 11, and 12 of T14500 are intended for use with the optional Inverter Circuit Board (Option 07) or DM-series Digital Multimeters. Option 07 allows the instrument to be operated from an external dc power source or an 1106 Power Supply. Option 07 and the DM-series Digital Multimeters cannot be used at the same time.

Secondary Circuit

The −8 volt, +5 volt, +15 volt, and +55 volt power supplies are series-regulated supplies. U4411A, U4411B, U4206A, and U4206B are two-channel, high-gain amplifier cells with differential inputs. These amplifiers monitor voltage variations in the output voltages and supply correction information to the series-regulating transistors. The +55 volt supply is the source of the reference voltage for the remaining supplies and its output must be correct or the −8 volt, +5 volt, and +15 volt supplies will not operate within their limits.

Current-limiting circuits provide short circuit protection for each of the regulated supplies. The following description applies only to the +55 volt current limiting circuit; the other current-limiting circuits operate in a similar manner.

In the +55 volt supply, Q4303 is normally biased off. Under normal conditions the base of Q4303 sets at about +55 volts. Under conditions of power supply loading, when the supply current increases, the voltage drop across R4303 increases. This increasing voltage is coupled through the base of Q4301 to the voltage divider, comprised of R4302 and R4208, causing the base of Q4303 to go more positive. When the supply current increases sufficiently, Q4303 turns on. The collector of Q4303 moves in the negative direction and begins turning off Q4302 and Q4301. Transistor Q4301 will continue conducting some current, even when the supply is limited, in order to produce enough voltage drop across R4303 to keep Q4303 biased on. The limited supply output voltage can be any value between its regulated value and zero, depending on the extra load it is trying to supply (see Figure 3-15). The limiting transistors for the other supplies are:

+15 V	Q4404
+5 V	Q4311
−8 V	Q4106
+110 V	Q4431

Figure 3-15 also shows the action of the current limit (foldover) circuit. At point A, Q4303 begins conducting. At point B the supply is directly shorted to ground through a current meter.

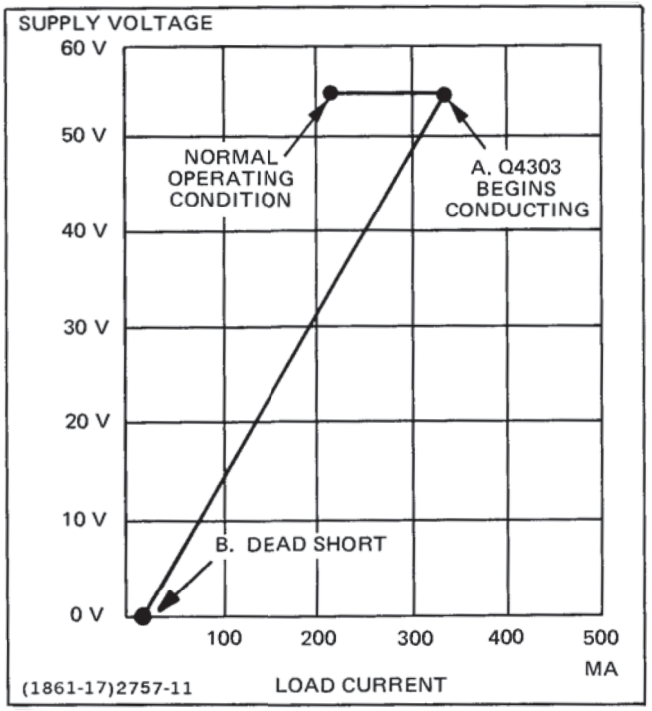

Figure 3-15. Foldover circuit action.

Components C4533, C4532, and R4527 are configured in a wave-shaping circuit arrangement that provides a sample of the ac voltage (present in the secondary of T14500) to the trigger circuitry for use in the LINE position of the A TRIGGER SOURCE switch.

FAN MOTOR CIRCUIT ◇13◇

The fan motor used in the 465B is a brushless dc fan motor using Hall Effect devices. Motor circuitry varies the rotational speed of the fan with variations in operating temperature. When the ambient temperature increases, the value of thermistor RT8038 is reduced. This causes the forward bias on Q8067 to increase and Q8067 conducts more current through the Hall Effect devices. Higher currents through the Hall Effect devices cause the potential difference across them (e.g., between pins 6 and 8 of the fan) to increase. This potential difference biases one of a pair of transistors on and the other off. In the example, if fan pin 8 is more positive than pin 6, U8061A will be on and U8061D will be off. The higher the potential difference between pin 8 and pin 6, the harder the on transistor will conduct; the harder the transistor conducts, the faster the fan rotates.

http://manoman.sqhill.com

CALIBRATION PROCEDURE

Introduction

This section of the manual is in two parts; Performance Check and Adjustment Procedure. Each subsection has a different purpose and important information regarding their use is included at the beginning of both subsections.

Test Equipment Required

The test equipment listed in Table 4-1, or an equivalent piece of test equipment, is required if the complete Performance Check and Adjustment Procedure is to be accomplished on the oscilloscope. A partial list of test equipment is provided in the Performance Check subsection to list the required test equipment type to complete the Performance Check only.

In Table 4-1, the specifications given for the equipment are the minimum necessary to provide accurate results. Therefore, the equipment used must meet or exceed the listed specifications. Detailed operating instructions for the test equipment are not given in this procedure. Refer to the appropriate instruction manual if more test equipment operating information is required.

Table 4-1

TEST EQUIPMENT REQUIRED

Description	Minimum Specifications	Usage	Examples
1. Variable Autotransformer	Capable of supplying 1.2 A over a range of 104 to 127 V.	Power supply regulation check.	General Radio W8MT3VM Variac Autotransformer.
2. Digital Voltmeter	Range, 0 to 140 V; dc voltage accuracy, within 0.15%; display 4 1/2 digits.	Low-Voltage Power Supply checks and adjustments. CRT Grid Bias adjustment. Vertical and Horizontal Centering adjustments. Calibrator Output Voltage adjustment.	a. TEKTRONIX DM 501 Digital Multimeter[a]. b. Any digital voltmeter that meets minimum specifications.
3. DC Voltmeter	Range, 0 to 2500 V; calibrated to 1% accuracy at −2450 V.	High-Voltage Power Supply adjustment.	a. Triplett Model 630-NA. b. Simpson Model 262.
4. Test Oscilloscope with 10X probe and 1X probe. (1X probe is optional accessory)	Bandwidth, dc to 100 MHz; minimum deflection factor, 5 mV/division; accuracy, within 3%; dual trace. Scale-factor switching.	Power Supply Ripple Check. CRT Z-Axis Compensation; Vertical gain adjustment. A Trigger Holdoff check. A and B +Gate output signals check.	a. TEKTRONIX 465B Oscilloscope with 2 (included) 10X probes. b. TEKTRONIX 475 Oscilloscope with 2 (included) 10X probes. c. TEKTRONIX P6101 1X probe 010-6101-03.

http://manoman.sqhill.com

Table 4-1 (cont)

Description	Minimum Specifications	Usage	Examples
5. Calibration Generator	Standard-amplitude accuracy, within 0.25%; signal amplitude, 2 mV to 50 V; output signal, 1 kHz square wave. Fast-rise repetition rate, 1 to 100 kHz; rise time, 1 ns or less; signal amplitude, 100 mV to 1 V; aberrations, within 2%. High-amplitude output, 60 V pulse supplying at least 10 mA.	Vertical checks and adjustments. Trigger View checks and adjustments. X Gain adjustment. Z-axis check.	a. TEKTRONIX PG 506 Calibration Generator.[a] b. Standard Amplitude Calibrator (Amplitude Calibrator only). Tektronix Part number 067-0502-01. c. TEKTRONIX Type 106 Square Wave Generator (Fast rise and High Amplitude only).
6. Sine-wave Generator	Frequency, 350 kHz to above 100 MHz; output amplitude variable from 0.5 to 5.5 V peak-to-peak; output impedance; 50 Ω; reference frequency, 50 to 350 kHz; amplitude accuracy, constant within 3% of reference frequency as output frequency changes.	Vertical Centering. Bandwidth and Isolation checks. Trigger checks and adjustments. X-Y Phase Difference. X Bandwidth check.	a. TEKTRONIX SG 503 Leveled Sine-wave Generator.[a] b. TEKTRONIX Type 191 Constant-Amplitude Signal Generator.
7. Time-Mark Generator	Marker outputs, 2 ns to 0.5 s; marker accuracy, within 0.1%; trigger output, 1 ms to 0.1 μs, time coincident with markers.	CRT Y-Axis and geometry adjustments. Auto Trigger check. Horizontal timing checks and adjustments.	TEKTRONIX TG 501 Time-Mark Generator.[a]
8. Low Frequency Generator	Frequency, 60 Hz to 100 kHz; output amplitude, variable from 30 mV to 4 V peak-to-peak. Positive square-wave output amplitude, 5 V.	Low-Frequency Trigger checks. Vertical Compensation	TEKTRONIX SG 502 Oscillator.[a]
9. 50 Ω Signal Pickoff	Frequency response, 50 kHz to 100 MHz; impedance 50 Ω for signal input, signal output, and trigger output.	Trigger checks and adjustments.	TEKTRONIX CT-3 Signal Pickoff. Part Number 017-0061-00.
10. Cable (2 Required)	Impedance, 50 Ω; length, 42 inches; connectors, bnc	Signal Interconnection.	Tektronix Part Number 012-0057-01.
11. Cable (2 Required)	Impedance, 50 Ω; length, 18 inches; connectors, bnc	Signal interconnection.	Tektronix Part Number 012-0076-00.
12. Adapter	Connectors, GR874-to-bnc female.	Signal interconnection.	Tektronix Part Number 017-0063-00.
13. Adapter	Connectors, GR874-to-bnc male.	Signal interconnection.	Tektronix Part Number 017-0064-00.

http://manoman.sqhill.com

Table 4-1 (cont)

Description	Minimum Specifications	Usage	Examples
14. Adapter	Connectors, bnc female-to-bnc female.	Signal interconnection.	Tektronix Part Number 103-0028-00.
15. Adapter	Connectors, bnc-female-to-coaxial cable connector.	Signal interconnection.	Tektronix Part Number 131-1315-01.
16. Adapter	Connectors, bnc-male-to-miniature probe tip.	Signal interconnection.	Tektronix Part Number 013-0084-01.
17. Dual-Input Coupler (2 required)	Connectors, bnc female-to-2-bnc male.	Vertical checks. Trigger checks and adjustments. X-Y Phase check.	Tektronix Part Number 067-0525-01.
18. T Connector	Connectors, bnc.	Signal interconnection.	Tektronix Part Number 103-0030-00.
19. 10X Attenuator (2 required)	Ratio, 10X; impedance, 50 Ω; connectors, bnc.	Vertical Compensation. Vertical Bandwidth check. Trigger adjustments.	Tektronix Part Number 011-0059-02.
20. 5X Attenuator	Ratio, 5X; impedance, 50 Ω; connectors, bnc.	Vertical System Compensation adjustments. Trigger adjustments.	Tektronix Part Number 011-0060-02.
21. 2X Attenuator	Ratio, 2X; impedance, 50 Ω; connectors, bnc.	Vertical System Compensation. Trigger adjustments.	Tektronix Part Number 011-0069-02.
22. Termination (2 required)	Impedance, 50 Ω; connectors, bnc.	Signal termination.	Tektronix Part Number 011-0049-01.
23. Screwdriver	Length, 3-inch shaft, bit size, 3/32 inch.	Adjust variable resistors.	Xcelite R-3323.
24. Low-Capacitance Screwdriver	Length, 1-inch shaft; bit size, 3/32 inch.	Adjust all variable capacitors.	J.F.D. Electronics Corp. Adjustment Tool Number 5284.
25. Shorting Strap		Calibrator adjustment.	

[a]**Requires a TM 500 Series power module.**

http://manoman.sqhill.com

http://manoman.sqhill.com

INDEX TO PERFORMANCE CHECK PROCEDURE

Vertical **Page**

1. Check TRACE ROTATION 4-6
2. Check ALT Mode 4-6
3. Check CHOP Mode 4-7
4. Check CH 1 Balance 4-7
5. Check CH 2 Balance 4-7
6. Check Vertical POSITION Range and Centering 4-7
7. Check BEAM FIND Operation 4-8
8. Check CH 1 and CH 2 Deflection Factor . . . 4-8
9. Check CH 1 and CH 2 VAR VOLTS/DIV Range 4-8
10. Check ADD Mode 4-8
11. Check INVERT Mode 4-9
12. Check Vertical Low-Frequency Compensation 4-9
13. Check CH 1 and CH 2 Volts/Division Compensation 4-9
14. Check CH 1 and CH 2 Transient Response . 4-9
15. Check CH 1 and CH 2 Bandwidth 4-10
16. Check Cascaded Gain and Bandwidth 4-10
17. Check Trigger View Centering and Gain . . . 4-10
18. Check Trigger View Low-Frequency Compensation 4-11
19. Check Trigger View High-Frequency Compensation 4-11
20. Check Zero Trigger View Delay 4-11

Triggers

1. Check A and B Internal Triggering 4-12
2. Check A and B External Triggering 4-13
3. Check A NORM TRIG MODE 4-13
4. Check SINGL SWP TRIG MODE 4-13

Horizontal

1. Check A and B TIME/DIV Accuracy 4-15
2. Check A VAR TIME/DIV Range 4-16
3. Check Delay or Differential Time Linearity . . 4-16
4. Check Delay or Differential Time Accuracy . 4-16
5. Check Delay or Differential Jitter 4-17
6. Check ALT Horizontal Display Trace Separation 4-17
7. Check A INTEN and B ENDS A Operation . . 4-17
8. Check X Gain 4-18
9. Check X Bandwidth 4-18

http://manoman.sqhill.com

VERTICAL

Equipment Required

1. Calibration Generator
2. Leveled Sine-wave Generator
3. 42-inch, 50 Ω Bnc Cable (2 required)
4. 10X Scale-factor-switching Probe
5. 50 Ω Bnc Termination (2 required)
6. 10X Bnc Attenuator
7. 5X Bnc Attenuator
8. 2X Bnc Attenuator
9. Bnc T Connector
10. Bnc-to-probe Tip Adapter
11. Dual-input coupler

465B Control Settings

POWER	ON

CRT

INTENSITY	As desired
FOCUS	Best focused display
SCALE ILLUM	As desired

Vertical (CH 1 and CH 2)

VERT MODE	CH 1
POSITION	Midrange
VOLTS/DIV	5 mV
VAR VOLTS/DIV	Calibrated detent
AC-GND-DC	GND
INVERT	Normal (button out)
20 MHz BW LIMIT	Full bandwidth (button out)

Trigger (A and B)

COUPLING	AC
LEVEL	Midrange
SLOPE	+
SOURCE	NORM
TRIG MODE	AUTO
A TRIGGER HOLDOFF	NORM

Sweep (A and B)

HORIZ DISPLAY	A
TIME/DIV	1 ms
VAR TIME/DIV	Calibrated detent
DELAY TIME POSITION	Fully counterclockwise
X10 MAG	Off (button out)
POSITION (Horizontal)	Midrange

1. Check TRACE ROTATION

a. Position the trace to the center horizontal graticule line.

b. Check that the trace is parallel with the center horizontal graticule line. Readjust TRACE ROTATION if necessary (front-panel screwdriver adjustment).

2. Check ALT Mode

NOTE

VERT MODE switches are push-push switches that must be pressed to select a particular VERT MODE and pressed again to remove the trace from the crt display. For example, selecting CH 1 VERT MODE does not release any VERT MODEs previously selected, and the CH 1 VERT MODE switch must be pressed again to remove the CH 1 trace from the display.

a. Set:

VERT MODE	CH 1, CH 2, A TRIG VIEW, ADD, and ALT
AC-GND-DC (both)	GND
A TRIGGER SOURCE	EXT

b. Use the CH 1 and CH 2 Vertical POSITION controls to spread the CH 1, CH 2, and ADD traces approximately 2 divisions apart. Use A TRIGGER LEVEL to position the A TRIG VIEW trace between the vertical channel traces.

http://manoman.sqhill.com

c. CHECK—Sweeps alternate in all settings of the A TIME/DIV switch except X-Y. The order of alternation is as follows: CH 1, CH 2, ADD, then A TRIG VIEW.

d. Press ADD and A TRIG VIEW VERT MODE switches to remove their traces from the crt display.

3. Check CHOP Mode

a. Set:

A TIME/DIV	1 μs
A TRIGGER SOURCE	NORM
VERT MODE	CH 1, CH 2, and CHOP

b. Use the Channel 1 and Channel 2 Vertical POSITION controls to position the two traces about 4 divisions apart.

c. Adjust A TRIGGER LEVEL for a stable display.

d. CHECK—Period of one cycle is approximately 2 μs.

e. Press ADD and A TRIG VIEW VERT MODE switches.

f. CHECK—Chopped display has four levels.

g. CHECK—Display for blanking of switching transients.

h. Press ADD, A TRIG VIEW, and CH 2 VERT MODE switches to remove their traces from the crt display.

4. Check CH 1 Balance

a. Set:

VERT MODE	CH 1
CH 1 VOLTS/DIV	20 mV

b. Position the trace to the center horizontal graticule line.

c. CHECK—Trace shift is 1.0 division or less as the CH 1 VAR VOLTS/DIV control is rotated from one extreme to the other extreme.

d. CHECK—CH 1 UNCAL LED comes on when the VAR control is out of the detent position.

e. Return CH 1 VAR to calibrated detent.

5. Check CH 2 Balance

a. Set:

VERT MODE	CH 2
CH 2 VOLTS/DIV	20 mV

b. Position the trace to the center horizontal graticule line.

c. CHECK—Trace shift is 1.0 division or less as the CH 2 VAR VOLTS/DIV control is rotated from one extreme to the other extreme.

d. CHECK—CH 2 UNCAL LED comes on when the VAR control is out of the detent position.

e. Return CH 2 VAR to calibrated detent.

f. Position the trace to the center horizontal graticule line.

g. CHECK—Trace shift is 2 divisions or less when switching from normal to INVERT.

6. Check Vertical POSITION Range and Centering

a. Set:

CH 1 VOLTS/DIV	20 mV
CH 2 VOLTS/DIV	0.1 V
AC-GND-DC (both)	DC
A TRIGGER LEVEL	Fully Clockwise
INVERT	Normal (button out)

b. Connect the leveled sine-wave generator output to the CH 2 OR Y input via a 50 Ω bnc cable and a 50 Ω bnc termination. Set the generator frequency to 50 kHz and adjust output for a vertical display of 4.8 divisions.

c. Set CH 2 VOLTS/DIV to 20 mV.

d. CHECK—Top of display can be positioned down to the center horizontal graticule line, and bottom of display can be positioned up to the center horizontal graticule line.

http://manoman.sqhill.com

e. Move the signal from the CH 2 OR Y input to the CH 1 OR X input connector.

f. Set VERT MODE switches for CH 1 display.

g. Repeat Step 6, part d, for CH 1.

7. Check BEAM FIND Operation

a. Push in and hold the BEAM FIND button.

b. CHECK—A compressed trace is visible regardless of the settings of the:

CH 1 POSITION control,
INTENSITY control, or
Horizontal POSITION control.

c. Return the Horizontal POSITION control and the INTENSITY control to midrange.

d. While still holding in the BEAM FIND button, vertically position the trace to the center horizontal graticule line.

e. Release the BEAM FIND button.

f. CHECK—Trace remains within the graticule area.

g. Disconnect the test equipment.

8. Check CH 1 and CH 2 Deflection Factor

a. Connect calibration generator standard-amplitude output to the CH 1 input connector via a 50 Ω bnc cable. Use no termination. Set the generator for a 20 mV signal and set the 465B AC-GND-DC switches to DC.

b. CHECK—CH 1 deflection factor is within the limits given in Table 4-2.

c. Set the VERT MODE switches to display CH 2, and move the signal from CH 1 OR X input to the CH 2 OR Y input connector.

d. CHECK—CH 2 deflection factor is within the limits given in Table 4-2.

Table 4-2

DEFLECTION FACTOR LIMITS

VOLTS/DIV Switch Setting	Standard Amplitude Signal	Vertical Deflection in Divisions	3% Tolerance in Divisions
5 mV	20 mV	4	3.88 to 4.12
10 mV	50 mV	5	4.85 to 5.15
20 mV	0.1 V	5	4.85 to 5.15
50 mV	0.2 V	4	3.88 to 4.12
0.1 V	0.5 V	5	4.85 to 5.15
0.2 V	1.0 V	5	4.85 to 5.15
0.5 V	2.0 V	4	3.88 to 4.12
1.0 V	5.0 V	5	4.85 to 5.15
2.0 V	10.0 V	5	4.85 to 5.15
5.0 V	20.0 V	4	3.88 to 4.12

9. Check CH 1 and CH 2 VAR VOLTS/DIV Range

a. Set:

VOLTS/DIV (both)	20 mV

b. Set the calibration generator for a 0.1 V standard-amplitude output signal.

c. CHECK—Display reduces to less than 2 divisions when the CH 2 VAR VOLT/DIV control is rotated to its extreme counterclockwise position.

d. Move the signal to the CH 1 OR X input connector and set the VERT MODE switches to display CH 1.

e. CHECK—Repeat part c using the CH 1 VAR VOLTS/DIV control.

f. Return the VAR controls to the calibrated detent position and remove the signal from the CH 1 input connector.

10. Check ADD Mode

a. Set:

VOLTS/DIV (both)	5 mV
VERT MODE	ADD

b. Connect calibration generator standard-amplitude signal to the CH 1 and CH 2 input connectors via a 50 Ω bnc cable and dual-input coupler.

http://manoman.sqhill.com

c. Set calibration generator for 10 mV output amplitude.

d. CHECK—Display is approximately 4 divisions.

11. Check INVERT Mode

a. Press CH 2 INVERT push button in.

b. CHECK—Display is approximately zero division.

12. Check Vertical Low-Frequency Compensation

a. Set:

TIME/DIV (both)	0.2 ms
VOLTS/DIV (both)	5 mV

b. Connect the calibration generator fast-rise + output to the CH 1 input connector via a 50 Ω bnc cable, 10X bnc attenuator, and 50 Ω bnc termination.

c. Set the calibration generator to 1 kHz and adjust output controls for a vertical display of 5 divisions. Adjust the A TRIGGER LEVEL control for a stable display.

d. CHECK—Rounding or overshoot is within 3% (0.15 division) at the frequencies listed in Table 4-3.

Table 4-3

LOW-FREQUENCY COMPENSATION SETUP

Calibration Generator Frequency	TIME/DIV Switch Setting
1 kHz	0.2 ms
10 kHz	20 μs
100 kHz	2 μs

13. Check CH 1 and CH 2 Volts/Division Compensation

a. Set:

VOLTS/DIV (both)	5 mV (see note)
A TIME/DIV	0.2 ms

NOTE

In step 13 all VOLTS/DIV settings require the use of a 10X probe with scale-factor switching (preferably the probe supplied as a standard accessory with the oscilloscope you are performance checking). If it is necessary to use a 10X probe without scale-factor switching, set the VOLTS/DIV to indicate one tenth of the settings listed.

b. Connect a 10X probe to the CH 1 input connector (note that the VOLTS/DIV Scale-Factor switching LED indicates 50 mV).

c. Connect the square-wave generator high-amplitude output through a 2X, 5X, or 10X bnc attenuator (depending on generator amplitude), to a 50 Ω bnc termination that is connected to a bnc-to-probe tip adapter. Insert the 10X-probe tip into the probe-tip adapter.

d. Adjust the square-wave generator for a 5-division, 1 kHz display, and add or remove attenuators and termination as necessary to maintain a 5-division display throughout step 13.

e. Adjust the probe compensation for the best flat-top waveform. Do not re-adjust probe compensation throughout the remainder of step 13.

f. CHECK—Rounding or overshoot on the waveform is within 3% (±0.15 division) at all settings of the VOLTS/DIV switch between 50 mV and 5 V.

g. Move the test setup to CH 2 input connector and set the VERT MODE switches to display CH 2.

h. Repeat step 13, part f, for Channel 2 (add or remove attenuators as necessary to maintain a 5-division display).

i. Disconnect probe and generator.

14. Check CH 1 and CH 2 Transient Response

a. Set:

TIME/DIV (both)	0.05 μs
VOLTS/DIV (both)	5 mV
A TRIGGER SLOPE	+

http://manoman.sqhill.com

b. Connect the calibration generator fast-rise + output to the CH 2 input connector via a 50 Ω bnc cable, 10X, 5X, or 2X bnc attenuator, and 50 Ω bnc termination. Set the generator frequency to 100 kHz and adjust output controls for a vertical display of 5 divisions. Adjust the generator output and add or remove attenuators as necessary to maintain a 5-division display throughout this check.

c. CHECK—Flat-top waveform is within 4% or less (0.2 division) for the 5 mV, 10 mV, and 20 mV positions of the VOLTS/DIV switch.

d. Move the test setup to the CH 1 input connector and set the VERT MODE switches to display CH 1.

e. CHECK—Repeat part c for Channel 1.

f. Disconnect the test setup.

15. Check CH 1 and CH 2 Bandwidth

a. Set:

VOLTS/DIV (both)	5 mV
A TIME/DIV	0.2 ms
A TRIGGER LEVEL	Fully clockwise

b. Connect the leveled sine-wave generator output to the CH 1 input connector via a 50 Ω bnc cable, 10X bnc attenuator, and 50 Ω bnc termination.

c. Set the sine-wave generator output for a vertical display of 5 divisions at 50 kHz. Change the sine-wave generator output frequency to 100 MHz.

d. CHECK—Display amplitude is 3.5 divisions or greater.

e. Repeat parts c and d for all CH 1 VOLTS/DIV switch settings from 5 mV to 0.5 V. Adjust the generator and add or remove attenuators as needed to maintain a 5-division, 50 kHz reference display.

f. Move the sine-wave generator output signal from the CH 1 input to the CH 2 input connector and set the VERT MODE switches to display CH 2.

g. Repeat parts c and d for all CH 2 VOLTS/DIV switch settings from 5 mV ro 0.5 V.

h. Disconnect the test setup.

16. Check Cascaded Gain and Bandwidth

a. Set:

VERT MODE	CH 2
VOLTS/DIV (both)	5 mV
TIME/DIV	1 ms

b. Connect the CH 1 VERT SIGNAL output connector (on the 465B rear panel) to the CH 2 input connector via a 50 Ω cable and a 50 Ω bnc termination.

c. Connect the calibration generator standard-amplitude output to the CH 1 input connector via a 50 Ω bnc cable. Set the calibration generator output for 5 mV.

d. CHECK—Display vertical amplitude is 5 divisions or greater.

e. Remove the calibration generator signal from the CH 1 input connector.

f. Connect the leveled sine-wave generator output to the CH 1 input connector via a 50 Ω bnc cable, 10X bnc attenuator, and 50 Ω bnc termination. Set the generator frequency to 50 kHz and adjust output controls for a vertical display of 5 divisions. Adjust the generator output frequency to 50 MHz.

g. CHECK—Display amplitude is 3.5 divisions or greater.

h. Disconnect the test setup.

17. Check Trigger View Centering and Gain

a. Set:

VERT MODE	A TRIG VIEW
A TIME/DIV	0.2 ms
A TRIGGER COUPLING	DC
A TRIGGER SOURCE	EXT
A TRIG MODE	AUTO

b. Connect the calibration generator standard-amplitude output to the A External Trigger input connector via a 50 Ω bnc cable. Use no termination. Set the generator output to 0.5 V.

http://manoman.sqhill.com

c. CHECK—Display amplitude is 5 divisions ±5% (5 divisions ±0.25 division).

d. CHECK—Display will trigger symmetrically within one graticule division when the A TRIGGER SLOPE is switched between + and −.

e. Set the A TRIGGER SOURCE to EXT/10 and change the output of the calibration generator to 5 V.

f. CHECK—Display amplitude is 5 divisions ±5% (5 divisions ±0.25 division).

g. Disconnect the calibration generator standard-amplitude signal from the A External Trigger input connector.

18. Check Trigger View Low-Frequency Compensation

a. Set:

A TRIGGER SOURCE	EXT
A TIME/DIV	0.1 ms

b. Connect the calibration generator high-amplitude output to the A External Trigger input connector via a 50 Ω bnc cable and 50 Ω bnc termination. Set the calibration generator output for a vertical display of 5 divisions at 1 kHz.

c. CHECK—Square wave has less than 10% overshoot or rounding.

d. Set A TRIGGER SOURCE to EXT/10 and adjust generator output for a vertical display of 5 divisions.

e. CHECK—Square wave has less than 10% overshoot or rounding.

f. Disconnect the calibration generator high-amplitude output from the A External Trigger input connector.

19. Check Trigger View High-Frequency Compensation

a. Set:

A TRIGGER SOURCE	EXT
A TIME/DIV	0.2 ms

b. Connect the calibration generator fast-rise + output to the A External Trigger input connector via a 50 Ω bnc cable, and 50 Ω bnc termination.

c. Set the calibration generator frequency for 100 kHz and adjust output for a vertical display of 5 divisions.

d. CHECK—Square-wave front-corner aberration is less than ±10% (±0.5 division).

e. Disconnect test setup.

20. Check Zero Trigger View Delay

a. Set:

VERT MODE	CH 1 and A TRIG VIEW
A TIME/DIV	0.02 μs
X10 MAG	On (button in)
A TRIGGER COUPLING	AC
CH 1 VOLTS/DIV	0.1 V

b. Connect output of sine-wave generator via bnc T, two 42-inch (equal length) 50 Ω bnc cables, and 50 Ω bnc terminations; one to the CH 1 input connector, and one to the A External Trigger input connector. Set sine-wave generator for a 6-division display of A TRIG VIEW at 40 MHz, then adjust CH 1 VAR and VOLTS/DIV to match the amplitude of the CH 1 display to the amplitude of the A TRIG VIEW display.

c. CHECK—Time difference with displays superimposed is ≤0.15 horizontal graticule divisions.

d. Set:

HORIZ DISPLAY	B DLY'D
A TIME/DIV	0.2 μs
B TIME/DIV	0.02 μs

e. CHECK—Time difference with displays superimposed is ≤0.15 horizontal graticule division.

f. Disconnect test setup.

http://manoman.sqhill.com

TRIGGERS

Equipment Required

1. Leveled Sine-wave Generator
2. Calibration Generator
3. 42-inch Bnc Cable (2 required)
4. Gr-to-bnc-female Adapter
5. Gr-to-bnc-male Adapter
6. 50 Ω Signal Pickoff Unit (Type CT-3)
7. 10X Bnc Attenuator
8. 2X Bnc Attenuator
9. 50 Ω Bnc Termination (2 required)
10. Dual-input Coupler (2 required)

465B Control Settings

POWER	ON

CRT

INTENSITY	As desired
FOCUS	Best focused display
SCALE ILLUM	As desired

Vertical (CH 1 and CH 2)

VERT MODE	CH 1
POSITION	Midrange
VOLTS/DIV	5 mV
VAR VOLTS/DIV	Calibrated detent
AC-GND-DC	DC
INVERT	Normal (button out)
20 MHz BW LIMIT	Full bandwidth (button out)

Trigger (A and B)

COUPLING	AC
LEVEL	Midrange
SLOPE	+
SOURCE	NORM
TRIG MODE	AUTO
A TRIGGER HOLDOFF	NORM

Sweep (A and B)

HORIZ DISPLAY	A
TIME/DIV	5 μs
VAR TIME/DIV	Calibrated detent
DELAY TIME POSITION	Fully counterclockwise
X10 MAG	Off (button out)
POSITION (Horizontal)	Midrange

1. Check A and B Internal Triggering

a. Connect the output of the leveled sine-wave generator to the A and B External trigger inputs via a 50 Ω cable, Gr-to-bnc-male adapter, 50 Ω signal pickoff unit (Type CT-3) THRU SIG OUT output, Gr-to-bnc-female adapter, 50 Ω bnc cable, 2X bnc attenuator, 10X bnc attenuator, 50 Ω bnc termination and dual-input coupler.

b. Connect the SIG OUT 10% on the CT-3 to the CH 1 and CH 2 inputs via a 50 Ω bnc cable, 50 Ω bnc termination and dual-input coupler.

c. Adjust the leveled sine-wave generator for either a 3-division, 50 kHz display and set both VOLTS/DIV switches to 50 mV (0.3 division of display), or a 5-division, 50 kHz display and set both VOLTS/DIV switches to 50 mV (0.5 division display) as necessary for parts d and f of step 1.

d. CHECK—Stable display can be obtained by adjusting the A TRIGGER LEVEL control in the following A TRIGGER COUPLING and A TRIGGER SOURCE switch positions:

A TRIGGER COUPLING	A TRIGGER SOURCE	DISPLAY
AC	NORM, CH 1, CH 2	0.3 Div
DC	NORM, CH 1, CH 2	0.3 Div
LF REJ	NORM, CH 1, CH 2	0.5 Div
HF REJ	NORM, CH 1, CH 2	0.5 Div

e. Set:

HORIZ DISPLAY	B DLY'D
A TRIGGER LEVEL	Fully clockwise

http://manoman.sqhill.com

f. CHECK—Stable display can be obtained by adjusting the B TRIGGER LEVEL control in the following B TRIGGER COUPLING and B TRIGGER SOURCE switch positions:

B TRIGGER COUPLING	B TRIGGER SOURCE	DISPLAY
AC	NORM, CH 1, CH 2	0.3 Div
DC	NORM, CH 1, CH 2	0.3 Div
LF REJ	NORM, CH 1, CH 2	0.5 Div
HF REJ	NORM, CH 1, CH 2	0.5 Div

2. Check A and B External Triggering

a. Set:

CH 1 VOLTS/DIV 20 mV
TRIGGER SOURCE (both) EXT
TRIGGER COUPLING (both) AC

b. Adjust leveled sine-wave generator output for 5 divisions of display on the crt.

c. CHECK—Stable display can be obtained by adjusting B TRIGGER LEVEL control in the following B TRIGGER COUPLING switch positions:

AC, DC

d. Remove the 2X bnc attenuator and set B TRIGGER COUPLING switch to LF REJ then HF REJ.

e. CHECK—Stable display can be obtained by adjusting B TRIGGER LEVEL control.

f. Set:

HORIZ DISPLAY A
A TRIGGER COUPLING LF REJ then HF REJ

g. CHECK—Stable display can be obtained by adjusting A TRIGGER LEVEL control with A TRIGGER COUPLING in both LF REJ and HF REJ.

h. Replace the 2X bnc attenuator.

i. CHECK—Stable display can be obtained by adjusting A TRIGGER LEVEL control in the following A TRIGGER COUPLING switch positions:

AC, DC

j. Remove the 10X bnc attenuator and set the A TRIGGER SOURCE switch to EXT/10.

k. CHECK—Stable display can be obtained by adjusting the A TRIGGER LEVEL control in the following A TRIGGER COUPLING switch positions:

AC, DC

l. Remove the 2X bnc attenuator and set A TRIGGER COUPLING switch to LF REJ then HF REJ.

m. CHECK—Stable display can be obtained by adjusting A TRIGGER LEVEL control.

3. Check A NORM TRIG Mode

a. Set:

A TRIGGER COUPLING AC
A TRIGGER SOURCE NORM
A TRIG MODE AUTO

b. Adjust A TRIGGER LEVEL for a stable display.

c. Set TRIG MODE switch to NORM.

d. CHECK—Stable display is visible.

e. Set CH 1 AC-GND-DC switch to GND.

f. CHECK—No visible display in the absence of an adequate trigger signal.

4. Check SINGL SWP TRIG Mode

a. Set CH 1 AC-GND-DC switch to DC.

b. Adjust A TRIGGER LEVEL until display just triggers.

c. Set CH 1 AC-GND-DC switch to GND.

d. Press SINGL SWP push button in.

e. CHECK—READY LED comes on and stays on.

http://manoman.sqhill.com

f. Set CH 1 AC-GND-DC switch to DC.

g. CHECK—READY LED goes out and a single sweep occurs.

h. Press SINGL SWP push button in.

i. CHECK—Single sweep occurs every time SINGL SWP push button is depressed.

j. Disconnect test setup.

http://manoman.sqhill.com

IMPORTANT NOTE

OSCILLOSCOPES WITH DIGITAL MULTIMETERS ATTACHED, REFER TO THE DIGITAL MULTIMETER MANUAL AT THIS POINT, THEN RETURN TO STEP 8 IN THE HORIZONTAL SECTION.

OSCILLOSCOPES WITHOUT DIGITAL MULTIMETERS, CONTINUE WITH THIS PROCEDURE.

HORIZONTAL

Equipment Required

1. Time-mark Generator
2. Calibration Generator
3. Leveled Sine-wave Generator
4. 42-inch, 50 Ω Bnc Cable
5. 50 Ω Bnc Termination

465B Control Settings

POWER	ON

CRT

INTENSITY	As desired
FOCUS	Best focused display
SCALE ILLUM	As desired

VERTICAL (CH 1 and CH 2)

VERT MODE	CH 1
POSITION	Midrange
VOLTS/DIV	0.5 V
VAR VOLTS/DIV	Calibrated detent
AC-GND-DC	DC
INVERT	Normal (button out)
20 MHz BW LIMIT	Full bandwidth (button out)

TRIGGER (A and B)

COUPLING	AC
LEVEL	Midrange
SLOPE	+
A SOURCE	NORM
B SOURCE	NORM
TRIG MODE	AUTO
A TRIGGER HOLDOFF	NORM

SWEEP (A and B)

HORIZ DISPLAY	A
TIME/DIV	1 ms
VAR TIME/DIV	Calibrated detent
DELAY TIME POSITION	Fully counterclockwise
X10 MAG	Off (button out)
POSITION (Horizontal)	Midrange

1. Check A and B TIME/DIV Accuracy

a. Connect the time-mark generator to CH 1 input via a 50 Ω bnc cable and a 50 Ω bnc termination.

b. CHECK—A and B timing accuracy according to Table 4-4. Timing to be accurate within 2% (0.2 division at the 11th time marker). If 11 time markers are not visible when checking B sweep, set the A TIME/DIV switch one step slower than the B TIME/DIV switch; for example:

A TIME/DIV	1 ms
B TIME/DIV	0.5 ms

When checking B timing, set HORIZ DISPLAY to B DLY'D and use B TRIGGER LEVEL to stabilize the display.

http://manoman.sqhill.com

Table 4-4

A AND B TIMING ACCURACY

A and B TIME/DIV Switch Setting	Time-Mark Generator Output	CRT Display (Markers/ Division)
0.02 μs	20 ns[a]	1
0.05 μs	50 ns	1
.1 μs	.1 μs	1
.2 μs	.2 μs	1
.5 μs	.5 μs	1
1 μs	1 μs	1
2 μs	2 μs	1
5 μs	5 μs	1
10 μs	10 μs	1
20 μs	20 μs	1
50 μs	50 μs	1
.1 ms	.1 ms	1
.2 ms	.2 ms	1
.5 ms	.5 ms	1
1 ms	1 ms	1
2 ms	2 ms	1
5 ms	5 ms	1
10 ms[b]	10 ms	1
20 ms[b]	20 ms	1
50 ms[b]	50 ms	1
A SWEEP ONLY		
.1 s[b]	.1 s	1
.2 s[b]	.2 s	1
.5 s[b]	.5 s	1

[a] **If the time-mark generator used does not have a 1-2-5 sequence, set to 1 or 2 time-markers/division as necessary.**

[b] **For sweep time greater than 5 ms/div set TRIG MODE to NORM.**

2. Check A VAR TIME/DIV Range

a. Set:

HORIZ DISPLAY	A
A TRIG MODE	AUTO
TIME/DIV	2 ms

b. Select 5 ms time markers from the time-mark generator.

c. CHECK—At least 1 marker per division can be obtained by adjusting the VAR TIME/DIV control.

d. Return the VAR TIME/DIV control to the detent position.

3. Check Delay or Differential Time Linearity

a. Set:

A TIME/DIV	1 ms
B TIME/DIV	5 μs
HORIZ DISPLAY	B DLY'D
B TRIGGER SOURCE	STARTS AFTER DELAY

b. Select 1 ms time markers from the time-mark generator.

c. Turn DELAY TIME POSITION to set time marker nearest 1.00 on dial to coincide with graticule center and note reading.

d. Turn DELAY TIME POSITION to set time marker nearest 2.00 on dial to coincide with graticule center and note reading.

e. CHECK—Difference in readings is 1.00 ±0.01 (0.99 to 1.01), from +15° C to +35° C; ±0.03 (0.97 to 1.03), from −15° C to +55° C.

f. Turn DELAY TIME POSITION dial to set every adjacent time marker to coincide with graticule center and note reading.

g. CHECK—Difference of readings between any two adjacent time markers is 1.00, ±0.01 (0.99 to 1.01), from +15° C to +55° C; ±0.03 (0.97 to 1.03), from −15° C to +55° C.

4. Check Delay or Differential Time Accuracy

a. Set:

HORIZ DISPLAY	B DLY'D
A TIME/DIV	0.2 μs
B TIME/DIV	0.05 μs

b. Set the A TIME/DIV, B TIME/DIV and the time-mark generator to the settings given in Table 4-5. First set the DELAY TIME POSITION dial to 1.00. Adjust the horizontal POSITION control so the top of one of the displayed time markers crosses the center vertical graticule line. (If the top of the time marker at the beginning of the sweep isn't visible, then use the second time marker.) Without touching the horizontal POSITION control, set the DELAY TIME POSITION dial to 9.00. Slightly readjust the DELAY TIME POSITION dial to position the top of the displayed time marker to the center vertical graticule line.

http://manoman.sqhill.com

Table 4-5

DELAY OR DIFFERENTIAL TIME ACCURACY

A TIME/ DIV Switch Setting	B TIME/ DIV Switch Setting	Time-Mark Generator Output
.2 μs	.02 μs	.1 μs
.2 μs	.05 μs	.1 μs
.5 μs	.05 μs	.5 μs
1 μs	.1 μs	1 μs
2 μs	.1 μs	1 μs
5 μs	.5 μs	5 μs
10 μs	1 μs	10 μs
20 μs	1 μs	10 μs
50 μs	5 μs	50 μs
.1 ms	10 μs	.1 ms
.2 ms	10 μs	.1 ms
.5 ms	50 μs	.5 ms
1 ms	.1 ms	1 ms
2 ms	.1 ms	1 ms
5 ms	.5 ms	5 ms
10 ms[a]	1 ms	10 ms
20 ms[a]	1 ms	10 ms
50 ms[a]	5 ms	50 ms
.1 s[a]	10 ms	.1 s
.2 s[a]	10 ms	.1 s
.5 s[a]	50 ms	.5 s

[a] **For sweep times greater than 5 ms/div, set TRIG MODE to NORM.**

c. CHECK—DELAY TIME POSITION dial setting to be 8.92 to 9.08.

d. Repeat parts b and c for each setting listed in Table 4-5.

5. Check Delay or Differential Jitter

a. Set:

DELAY TIME POSITION	9.00
A TIME/DIV	1 ms
B TIME/DIV	0.2 μs

b. Select 1 ms time markers.

c. Slightly readjust DELAY TIME POSITION dial to position a time marker on screen.

d. CHECK—Jitter on leading edge of the time marker does not exceed 1 division (2.5 divisions if operating from a 50 Hz line voltage). Disregard slow drift.

e. Set the DELAY TIME POSITION dial to 1.00 and repeat parts c and d.

f. Disconnect the time-mark generator.

6. Check ALT Horizontal Display Trace Separation

a. Set:

HORIZ DISPLAY	A INTEN
A TIME/DIV	1 ms
B TIME/DIV	.1 ms
B INTENSITY	As required for visible display

b. Use CH 1 Vertical POSITION control to align the trace with the center horizontal graticule line.

c. Select ALT Horizontal Display.

d. CHECK—TRACE SEP control will move the B trace at least ±4 vertical divisions from the center graticule line with A trace centered.

7. Check A INTEN and B ENDS A Operation

a. Set:

A TIME/DIV	1 ms
B TIME/DIV	.1 ms
DELAY TIME POSITION	About 5.00
HORIZ DISPLAY	A INTEN

b. CHECK—B portion of trace is intensified (about 1 division).

c. Rotate A TRIGGER HOLDOFF control clockwise to the B ENDS A position (in the detent).

d. CHECK—Trace ends at the end of the intensified portion.

http://manoman.sqhill.com

8. Check X Gain

a. Set:

TIME/DIV (both)	X-Y
VOLTS/DIV (both)	5 mV
CH 1 AC-GND-DC	AC
CH 2 AC-GND-DC	GND
HORIZ DISPLAY	A
A TRIGGER HOLDOFF	NORM

b. Connect a 20 mV standard-amplitude signal from the calibration generator to the CH 1 input via a 50 Ω bnc cable.

c. CHECK—Display is 4 divisions (±0.16 division) between the dots.

d. Disconnect test setup.

9. Check X Bandwidth

a. Connect the leveled sine-wave generator to the CH 1 input via a 50 Ω bnc cable and 50 Ω bnc termination.

b. Adjust the generator for a horizontal display of 10 divisions at 50 kHz.

c. Without touching the generator amplitude, adjust the generator frequency to 4 MHz.

d. CHECK—Display is at least 7 divisions in length.

e. Disconnect test setup.

http://manoman.sqhill.com

ADJUSTMENT PROCEDURE

IMPORTANT—PLEASE READ BEFORE USING THIS PROCEDURE

Purpose

The purpose of the Adjustment Procedure is to provide a calibration sequence for adjustments—not to provide a troubleshooting guide. See the Troubleshooting Aids portion of the Maintenance section for troubleshooting information.

Limits and Tolerances

All limits and tolerances given in this procedure are calibration guides and should not be interpreted as instrument specifications unless they are also found in the Specification section of this manual.

Tolerances given are for the instrument under test and do not include test equipment error.

Step Titles

Where possible, instrument performance is checked before an adjustment is made. Steps containing checks and adjustments are titled Check/Adjust. Those with checks only are titled Check.

Line Voltage Selection

This procedure is for 115 Vac line, medium range. If a different range is to be used, set the Regulating Range Selector and Line Voltage Selector for the available line voltage (see Operating Voltage under Installation Instructions in Section 2 of this manual).

Internal Adjustments

Do not preset the internal controls or move the +55 volt supply adjustment as this will typically require complete recalibration of the oscilloscope.

Display

The most accurate display adjustments are made with a stable, well-focused, low-intensity display. Unless otherwise noted, adjust the Intensity, Astigmatism, Focus, and Trigger Level controls as needed.

Test Equipment Required

Refer to Table 4-1, at the beginning of this section, for a list of test equipment required, specifications, usage, and recommended types.

Special Calibration Fixtures. Special calibration fixtures are used only where they facilitate instrument adjustment. These fixtures are available from Tektronix Inc. Order by part number through your local Tektronix Field Office or representative.

Calibration Equipment Alternatives and Partial Procedures. The Adjustment procedure is based on the first item of equipment given as an example. When other equipment is substituted, control settings or calibration setups might need to be altered. If the exact equipment listed is not available, check the Minimum Specification column carefully to see if any other equipment might suffice. Then check the Usage column to see where this item is used. If used for a check that is of little or no importance to your measurement requirements, the item and corresponding step(s) can be deleted.

If the applications for which you will use the 465B do not require the full performance available, the procedure and the equipment list can be shortened accordingly. For example, the basic measurement capabilities of this instrument can be verified by checking and adjusting as needed: vertical deflection factor, horizontal timing accuracy, and the calibrator signal. If any step requires more than a minor readjustment, check Table 4-6 for any possible interactions.

If a Performance Check indicates that only one subsection requires adjustment, each subsection (Vertical, Horizontal, etc.), except the Power Supply, may be adjusted independently. Also, if maintenance has been performed in a subsection, the adjustments for that area may be accomplished without completing the adjustments in other subsections. If any maintenance or adjustments are changed in the Power Supply circuitry, it is advisable to perform a complete adjustment procedure including all subsections.

Interactions

Table 4-6 shows calibration adjustments and the possible interaction each adjustment might have on other adjustments. The use of Table 4-6 is particularly important if only a partial procedure is performed or if a circuit requires recalibration due to component replacement.

To use this table, find the adjustment made in the column at the left of the table. Then move to the right across that row until you come to a darkened square. From

http://manoman.sqhill.com

Table 4-6

ADJUSTMENT INTERACTIONS

ADJUSTMENT MADE ↓ / INTERACTION →	+55 V SUPPLY	TRACE ROTATION	Y-AXIS ALIGNMENT	GEOMETRY	CH 1 VAR BAL	CH 2 VAR BAL	INVERT BAL	CH 1 POSITION CENTERING	CH 2 POSITION CENTERING	CH 1 GAIN	CH 2 GAIN	VERT OUT GAIN	SWP START AND A SWP CAL	X1 HORIZONTAL GAIN	X10 HORIZONTAL GAIN	B SWP CAL	HIGH SPEED MAG TIMING (A AND B)	TRIGGERING SENSITIVITY (A AND B)	SLOPE CENTERING (A AND B)	TRIG LEVEL CENTERING (A AND B)	NORM TRIG DC BALANCE	CH 1 TRIG DC BAL	CH 2 TRIG DC BAL	TRIGGER VIEW CENTERING	TRIGGER VIEW GAIN	X GAIN	CRT GRID BIAS	CRT
+55 V SUPPLY	■	■	■	■	■	■	■	■	■	■	■	■	■	■	■	■	■	■	■	■	■	■	■	■	■	■	■	
TRACE ROTATION		■	■	■																								
Y-AXIS ALIGNMENT		■	■	■																								
GEOMETRY			■	■																								
CH 1 VAR BAL					■			■														■	■					
CH 2 VAR BAL						■			■														■	■				
INVERT BAL							■		■														■	■				
CH 1 POSITION CENTERING								■														■						
CH 2 POSITION CENTERING									■													■						
CH 1 GAIN										■								■										
CH 2 GAIN											■							■										
VERT OUT GAIN										■	■	■													■			
SWP START AND A SWP CAL													■	■	■	■	■											
X1 HORIZONTAL GAIN													■	■	■	■	■									■		
X10 HORIZONTAL GAIN													■	■	■	■												
B SWP CAL													■	■	■	■												
HIGH SPEED MAG TIMING (A AND B)													■	■	■	■												
TRIGGERING SENSITIVITY (A AND B)																		■	■	■								
SLOPE CENTERING (A AND B)																		■	■	■								
TRIG LEVEL CENTERING (A AND B)																		■	■	■				■				
NORM TRIG DC BALANCE								■	■												■							
CH 1 TRIG DC BAL					■																	■						
CH 2 TRIG DC BAL						■																	■					
TRIGGER VIEW CENTERING																								■				
TRIGGER VIEW GAIN												■													■			
X GAIN													■	■												■		
CRT GRID BIAS																											■	
CRT		■	■	■				■	■	■	■	■	■	■	■	■	■	■	■	■	■	■	■	■	■	■	■	■

http://manoman.sqhill.com

the darkened square move up the column and check the accuracy of the adjustment heading that column. Readjust if necessary.

Preparation

Remove the 465B cabinet by following the procedure listed under "Cabinet and Rack Adapter Removal and Replacement" in the Maintenance section of this manual.

Connect test equipment and instrument to be calibrated to an appropriate power source. Turn on and allow a 20-minute warmup period before commencing Adjustment Procedure.

INDEX TO ADJUSTMENT PROCEDURE

Power Supply

Page

1. Check/Adjust Power Supply DC Levels, Regulation, and Ripple (R4318) 4-23

2. Check High Voltage Supply 4-24

Display and Z Axis

1. Check/Adjust CRT Grid Bias (R4109) 4-25

2. Check/Adjust Trace Alignment (TRACE ROTATION) 4-25

3. Check/Adjust Y-Axis Alignment (R4072) 4-26

4. Check/Adjust Geometry (R4069) 4-26

5. Check/Adjust Z-Axis Compensation (C4217) . 4-26

Vertical

1. Check Probe Indicator LED 4-28

2. Check Input Coupling (AC-GND-DC) Switches 4-28

3. Check ALT Mode 4-28

4. Check CHOP Mode 4-28

5. Check BEAM FIND 4-28

6. Check/Adjust CH 1 Var Volts/Div Balance and VAR Indicator (R1484) 4-29

7. Check/Adjust CH 1 Position Centering (R1135) 4-29

8. Check/Adjust CH 2 Var Volts/Div Balance and VAR Indicator (R1884) 4-29

9. Check/Adjust CH 2 Invert Balance (R1975) ... 4-29

10. Check/Adjust CH 2 Position Centering (R1735) 4-29

11. Check CH 2 and CH 1 Gate Current 4-30

12. Check/Adjust Gain (R1482, R2025, R1882) (R1482, R2005, R1882 below SN B030000) 4-30

13. Check CH 1 and CH 2 Var Volts/Div Range . 4-31

14. Check ADD mode 4-31

15. Check Compression and Expansion 4-31

16. Check/Adjust Low-Frequency Compensation 4-32

17. Check/Adjust CH 1 Volts/Div Compensation 4-34

18. Check/Adjust CH 2 Volts/Div Compensation 4-34

19. Check/Adjust CH 2 and Output High-Frequency Compensation 4-35

20. Check CH 2 Position Effect 4-35

21. Check/Adjust CH 1 High-Frequency Compensation 4-36

22. Check CH 1 Position Effect 4-36

23. Check CH 1 Transient Response 4-36

24. Check CH 2 Transient Response 4-36

25. Check Bandwidth 4-36

26. Check Cascaded Gain and Bandwidth 4-37

27. Check Channel Isolation 4-37

28. Check/Adjust Common-Mode Rejection Ratio (R1882) 4-37

29. Check Bandwidth Limit Operation 4-38

30. Check/Adjust Trigger View Centering and Gain (R7526, R7439) 4-38

31. Check/Adjust Trigger View Low-Frequency Compensation (C7505, C7506) 4-38

32. Check/Adjust Trigger View High-Frequency Compensation (C7425, C7529, R7423) 4-39

33. Check/Adjust Zero Trigger View Delay (R6011, R6152) 4-39

Triggers

1. Check/Adjust A Trigger Sensitivity and TRIG LED (R7246) 4-39

2. Check/Adjust B Trigger Sensitivity (R7045) ... 4-41

http://manoman.sqhill.com

3. Check/Adjust B Trigger Slope Center and Level (R7042, R7026) 4-42

4. Check/Adjust A Trigger Slope Center and Level (R7242, R7224) 4-42

5. Check/Adjust A Trigger DC Levels (R1202, R1126, R1835) 4-43

6. Check B Trigger DC Levels 4-43

7. Check B Internal 10 MHz Triggering 4-43

8. Check A Internal 10 MHz Triggering 4-44

9. Check A External 10 MHz Triggering 4-44

10. Check B External 10 MHz Triggering 4-45

11. Check B and A External 100 MHz Triggering 4-45

12. Check A Internal 100 MHz Triggering 4-46

13. Check B Internal 100 MHz Triggering 4-46

14. Check A and B High-Frequency Reject Triggering 4-47

15. Check Single Sweep 4-47

16. Check 60 Hz Internal Triggering 4-48

17. Check 60 Hz External Triggering 4-49

18. Check A and B External Trigger Level Ranges 4-49

19. Check Line Triggers 4-50

20. Check NORM A Trigger Mode 4-50

21. Check AUTO Recovery Time 4-51

Horizontal

1. Check/Adjust Sweep Start and A Sweep Calibration (R4570, R6053) 4-53

2. Check Delay or Differential Time Linearity ... 4-53

3. Check/Adjust Horizontal Amplifier Gain (R4373, R4274) 4-53

4. Check Sweep Linearity 4-54

5. Check/Adjust R4253 Magnifier Centering (SN B011250—up) and R4275 Registration ... 4-54

6. Check/Adjust B Sweep Calibration (R6052) .. 4-54

7. Check A Sweep Length 4-54

8. Check Var Time/Division 4-54

9. Check Horizontal Position Range 4-55

10. Check/Adjust A 10 μs Timing (C6002) 4-55

11. Check/Adjust A Sweep High Speed Timing (C6015) 4-55

12. Check/Adjust B Sweep High Speed Timing (C6042) 4-56

13. Check A and B Time/Division Accuracy 4-56

14. Check/Adjust High Speed Magnified Timing (C4246, C4247) 4-56

15. Check A and B Magnified Timing Accuracy . 4-57

16. Check Delay or Differential Time Accuracy .. 4-58

17. Check Delay or Differential Time Jitter 4-58

18. Check/Adjust X Gain (R4381) 4-58

19. Check X-Y Phasing and Bandwidth 4-59

20. Check B Ends A 4-59

21. Check A Trigger Holdoff 4-59

Gates, Calibrator and Ext Z Axis

1. Check A and B +Gates 4-61

2. Check/Adjust Calibrator DC Level (R4293) ... 4-61

3. Check External Z Axis 4-62

http://manoman.sqhill.com

POWER SUPPLY

Equipment Required

1. Digital Voltmeter
2. DC Voltmeter
3. Test Oscilloscope
4. Autotransformer
5. 3-Inch Slotted Screwdriver

See ADJUSTMENT LOCATIONS 1 *in the Diagrams section for adjustments and test points (TP).*

NOTE

After performing the following control settings, connect the instrument to a power source through a Variable Autotransformer. Set the Autotransformer to 115 V before turning the instrument on.

465B Control Settings

Power Controls

Regulating Range Selector	Medium
Line Voltage Selector	115 V
POWER	ON

CRT Controls

INTENSITY	As desired
FOCUS	Best focused display
SCALE ILLUM	As desired

Vertical Controls (both Channels if applicable)

VOLTS/DIV	5 mV
VAR	Calibrated detent
POSITION	Midrange
AC-GND-DC	GND
VERT MODE	CH 1
INVERT	Normal (button out)
20 MHz BW LIMIT	Full bandwidth (button out)

Triggering Controls (both A and B if applicable)

LEVEL	As needed for a stable display
SLOPE	+
COUPLING	AC
SOURCE	NORM
TRIG MODE	AUTO

Sweep Controls

HORIZ DISPLAY	A
DELAY TIME POSITION	Fully counterclockwise
A TIME/DIV	1 ms
B TIME/DIV	1 ms
VAR TIME/DIV	Calibrated detent
X10 MAG	Off (button out)
POSITION (Horizontal)	Midrange
A TRIGGER HOLDOFF	NORM

1. Check/Adjust Power Supply DC Levels, Regulation, and Ripple (R4318)

NOTE

Review the information at the beginning of the Adjustment Procedure before starting the procedure.

a. Connect the digital voltmeter common lead to chassis ground and the + lead to the test point given in Table 4-7. Voltage to be within the given limits.

http://manoman.sqhill.com

Table 4-7

LOW VOLTAGE POWER SUPPLY LIMITS

Power Supply	Test Point	Reading	Tolerance
+55 V	TP4338	+54.62 to +55.39	±0.7%
+15 V	TP4339	+14.75 to +15.26	±1.7%
+5 V	TP4337	+4.92 to +5.09	±1.7%
−8 V	TP4439	−7.86 to −8.14	±1.7%
+110 V	TP4340	+106.7 to +113.3	±3.0%

NOTE

If the adjustment in step 1, part b, is made, the oscilloscope will require complete recalibration.

b. Connect the digital voltmeter common lead to chassis ground and + lead to TP4338. ADJUST—+55 volt supply (R4318) for +55 volts. Recheck all supplies according to Table 4-7.

c. Connect the test oscilloscope to the indicated test point and check the ripple amplitude according to Table 4-8 while varying the line voltage between 104 V and 126 V. For improved resolution when measuring ripple amplitude, use a 1X probe and cascaded gain on the test oscilloscope.

Table 4-8

TYPICAL LOW VOLTAGE POWER SUPPLY RIPPLE

Power Supply	Test Point	Typical Ripple (Peak-to-Peak)
+55 V	TP4338	4 mV
+15 V	TP4339	2 mV
+5 V	TP4337	2 mV
−8 V	TP4439	2 mV
+110 V	TP4340	20 mV

d. Return line voltage to 115 V.

2. Check High Voltage Supply

a. Connect the dc voltmeter common lead to chassis ground and the + lead to TP4129 on the interface board. (TP4129 is accessible through a hole in the high voltage cover.)

b. CHECK—High Voltage supply for −2450 V ±2.2% (−2396 V to −2504 V).

c. Disconnect the dc voltmeter.

http://manoman.sqhill.com

DISPLAY AND Z AXIS

Equipment Required

1. DC Voltmeter
2. Test Oscilloscope
3. Time-mark Generator
4. 50 Ω Bnc Cable
5. 50 Ω Bnc Termination
6. 10X Probe
7. 3-inch Slotted Screwdriver
8. Low-capacitance Slotted Screwdriver

See ADJUSTMENT LOCATIONS 1 *in the Diagrams section for adjustments and test points (TP).*

465B Control Settings

Power Controls

Regulating Range Selector	Medium
Line Voltage Selector	115 V
POWER	ON

CRT Controls

INTENSITY	As desired
FOCUS	Best focused display
SCALE ILLUM	Fully counterclockwise

Vertical Controls (both Channels if applicable)

VOLTS/DIV	5 mV
VAR	Calibrated detent
POSITION	Midrange
AC-GND-DC	GND
VERT MODE	CH 1
INVERT	Normal (button out)
20 MHz BW LIMIT	Full bandwidth (button out)

Triggering Controls (both A and B if applicable)

LEVEL	As needed for a stable display
SLOPE	+
COUPLING	AC
SOURCE	NORM
TRIG MODE	AUTO

Sweep Controls

HORIZ DISPLAY	A
DELAY TIME POSITION	Fully Counterclockwise
A TIME/DIV	X-Y
VAR TIME/DIV	Calibrated detent
X10 MAG	Off (button out)
POSITION (Horizontal)	Midrange
A TRIGGER HOLDOFF	NORM

1. Check/Adjust CRT Grid Bias (R4109)

a. Connect the digital voltmeter common lead to chassis ground and the + lead to TP4217. (TP4217 is accessible through a hole in the high voltage cover.)

b. Set the INTENSITY control for +20 V on the digital voltmeter.

c. CHECK—Display for a well defined, low intensity dot. Use FOCUS and ASTIG controls as needed.

d. ADJUST—CRT Grid Bias (R4109) for a visible dot, then back off control until the dot just disappears.

2. Check/Adjust Trace Alignment (TRACE ROTATION)

a. Set:

A TIME/DIV	0.5 ms
INTENSITY	As desired
SCALE ILLUM	As desired

http://manoman.sqhill.com

b. Position the trace to the center horizontal graticule line.

c. CHECK—Trace is parallel with the center horizontal graticule line.

d. ADJUST—TRACE ROTATION (front panel adjustment) to make the trace parallel with the center horizontal graticule line.

3. Check/Adjust Y-Axis Alignment (R4072)

a. Connect 1 ms time markers from the time-mark generator to the CH 1 input via a 50 Ω bnc cable and a 50 Ω bnc termination.

b. Set:

CH 1 AC-GND-DC	DC
CH 1 VOLTS/DIV	0.1 V

c. Adjust VAR TIME/DIV control for exactly 1 time marker/major division. (Time markers should fill the screen vertically. If not, reduce the VOLTS/DIV switch setting.)

d. CHECK—Display for 0.1 division tilt or less, when compared to the center vertical graticule line.

e. ADJUST—Y-Axis Alignment (R4072) to align to center time marker with the center vertical graticule line.

f. INTERACTION—TRACE ROTATION.

4. Check/Adjust Geometry (R4069)

a. CHECK—Display for 0.1 division or less, vertical curvature of the markers across the graticule area. (Readjust A VAR TIME/DIV as needed to maintain exactly 1 marker per division.)

b. ADJUST—Geometry (R4069) for minimum curvature of the markers across the graticule area.

c. INTERACTION—Y-Axis Alignment.

d. Disconnect the test setup.

e. Return A VAR TIME/DIV to detent.

5. Check/Adjust Z-Axis Compensation (C4217)

a. Set the A TIME/DIV switch to 0.05 μs.

b. Connect the 10X probe from the test oscilloscope to TP4217.

c. Adjust the 465B INTENSITY control for a 15 V display on the test oscilloscope.

d. CHECK—Test oscilloscope display for optimum square corner on the unblanking gate (with minimum ringing).

e. ADJUST—Z-Axis Compensation (C4217), with a low-capacitance screwdriver, for the best square corner on the unblanking pulse viewed on the test oscilloscope.

f. Disconnect the test setup.

g. CHECK—Display for uniform intensity across the graticule area (especially the first 2 divisions of the trace).

h. READJUST—C4217, if necessary.

http://manoman.sqhill.com

VERTICAL

Equipment Required

1. Calibration Generator
2. Test Oscilloscope (only if gain requires complete recalibration
3. Leveled Sine Wave Generator
4. Two 10X Probes (one should have Scale-factor Switching, however an 11 kΩ resistor may be substituted in Step 1, part a).
5. 50 Ω Bnc Cable (2 required)
6. Dual-input Coupler
7. 2X or 5X Bnc Attenuator
8. 10X Bnc Attenuator (2 required)
9. 50 Ω Bnc Termination (2 required)
10. Low-capacitance Screwdriver
11. 3-inch Slotted Screwdriver
12. Bnc-to-probe tip Adapter
13. Bnc-female-to-coaxial-cable-connector Adapter.

See ADJUSTMENT LOCATIONS 2 *and* ADJUSTMENT LOCATIONS 3 *in the Diagrams section for adjustments and test points (TP).*

465B Control Settings

POWER	ON

Display

INTENSITY	As desired
FOCUS	For optimum definition
SCALE ILLUM	As desired
ASTIG	Best defined trace

Vertical (CH 1 and CH 2)

VERT MODE	CH 1
POSITION	Midrange
VOLTS/DIV	5 mV
VAR VOLTS/DIV	Calibrated detent
AC-GND-DC	DC
INVERT	Normal (button out)
20 MHz BW LIMIT	Full bandwidth (button out)

Trigger (A and B)

COUPLING	AC
LEVEL	As needed for stable display
SLOPE	+
A TRIGGER SOURCE	NORM
B TRIGGER SOURCE	STARTS AFTER DELAY
TRIG MODE	AUTO
A TRIGGER HOLDOFF	NORM

Sweep (A and B)

HORIZ DISPLAY	A
A TIME/DIV	1 ms
B TIME/DIV	1 ms
VAR TIME/DIV	Calibrated detent
DELAY TIME POSITION	Fully counterclockwise
X10 MAG	Off (button out)
POSITION (Horizontal)	Midrange

http://manoman.sqhill.com

1. Check Probe Indicator LED

a. Connect a 10X probe with a Scale-factor Switching connector to CH 1 input (if no Scale-factor Switching probe is available, an 11 kΩ resistor may be used. Connect the resistor between ground and the metal coding ring on the input connector).

b. CHECK—5 mV LED is extinguished and 50 mV LED is illuminated.

c. Set VERT MODE switches to display CH 2 and move probe to CH 2 input.

d. CHECK—5 mV LED is extinguished and 50 mV LED is illuminated.

e. Remove 10X probe.

2. Check Input Coupling (AC-GND-DC) Switches

a. Connect output of calibration generator to CH 2 input via 50 Ω cable. Set the generator for 20 mV standard-amplitude output.

b. Position bottom of display to center horizontal graticule line and set CH 2 AC-GND-DC switch to GND.

c. CHECK—No vertical deflection; trace is at center horizontal graticule line.

d. Set CH 2 AC-GND-DC switch to AC.

e. CHECK—Display is centered about center horizontal graticule line.

f. Set VERT MODE switches to display CH 1 and move test signal to CH 1.

g. Position bottom of display to center horizontal graticule line.

h. Set CH 1 AC-GND-DC switch to GND.

i. CHECK—No vertical deflection; trace is at center horizontal graticule line.

j. Set CH 1 AC-GND-DC switch to AC.

k. CHECK—Display is centered about center horizontal graticule line.

l. Disconnect square-wave signal.

3. Check ALT Mode

Set:

VERT MODE	CH 1, CH 2, and ALT: OUT
A TRIGGER LEVEL	Fully clockwise

b. Position traces about 2 divisions apart.

c. CHECK—Sweeps alternate for all A TIME/DIV settings except X-Y.

4. Check CHOP Mode

a. Set:

A TIME/DIV	0.5 μs
VERT MODE	CH1, CH 2, and CHOP
AC-GND-DC (both)	GND
A TRIGGER COUPLING	HF REJ
A TRIGGER LEVEL	As needed for stable display

b. Position traces about 4 divisions apart and set A TRIGGER LEVEL control for a stable display.

c. CHECK—Vertical switching transients are completely blanked between horizontal chopped segments.

d. CHECK—Duration of each cycle is approximately 4 divisions.

5. Check BEAM FIND

a. Push in BEAM FIND button and hold.

b. CHECK—Trace remains entirely on screen, regardless of the setting of vertical or horizontal POSITION controls.

c. Release BEAM FIND button.

http://manoman.sqhill.com

6. Check/Adjust CH 1 Var Volts/Div Balance And Var Indicator (R1484)

a. Position trace to center horizontal graticule line.

b. CHECK—CH 1 UNCAL LED is illuminated when VAR control is out of detent.

c. CHECK—Trace shift of 0.2 division or less when rotating VAR control from one extreme to the other.

d. ADJUST—CH 1 Var Bal (R1484) for minimum trace shift while rotating CH 1 VAR control from one extreme to the other.

e. Return CH 1 VAR control to detent position.

7. Check/Adjust CH 1 Position Centering (R1135)

a. Set:

CH 1 VOLTS/DIV	.2 V
CH 1 AC-GND-DC	AC
A TIME/DIV	1 ms

b. Connect leveled sine-wave generator output to CH 1 input via 50 Ω bnc cable and 50 Ω termination. Set the generator for a vertical display of 2.4 divisions at 50 kHz.

c. Set CH 1 VOLTS/DIV switch to 20 mV without moving the VAR control.

d. CHECK—Top of display positions down to center horizontal graticule line or below, bottom of display positions up to center horizontal graticule line or above.

e. ADJUST—CH 1 Position Center (R1135) so display positions same distance above and below graticule center line.

f. Disconnect generator.

8. Check/Adjust CH 2 Var Volts/Div Balance and Var Indicator (R1884)

a. Set VERT MODE switches to display CH 2.

b. CHECK—CH 2 UNCAL LED is illuminated when VAR control is out of detent.

c. CHECK—Trace shift is 0.2 division or less when rotating VAR control from one extreme to the other.

d. ADJUST—CH 2 Var Bal (R1884) for minimum trace shift while rotating CH 2 VAR control from one extreme to the other.

e. Return CH 2 VAR control to detent position.

9. Check/Adjust CH 2 Invert Balance (R1975)

a. Set CH 2 AC-GND-DC to GND.

b. Position trace to center horizontal graticule line and push INVERT button in.

c. CHECK—Trace shift is 0.2 division or less when switching from normal to inverted.

d. ADJUST—Invert Bal (R1975) for minimum trace shift.

10. Check/Adjust CH 2 Position Centering (R1735)

a. Set:

INVERT	Normal (button out)
CH 2 VOLTS/DIV	.2 V
CH 2 AC-GND-DC	AC
A TRIGGER LEVEL	Fully clockwise

b. Connect leveled sine-wave generator output to CH 2 input via 50 Ω bnc cable and 50 Ω bnc termination. Set the generator for a vertical display of 2.4 divisions at 50 kHz.

c. Set CH 2 VOLTS/DIV switch to 20 mV without moving VAR control.

d. CHECK—Top of display positions down to center horizontal graticule line or below, bottom of display positions up to center horizontal graticule line or above.

e. ADJUST—CH 2 Position Center (R1735) so display positions same distance above and below graticule line.

f. Disconnect generator.

http://manoman.sqhill.com

11. Check CH 2 and CH 1 Gate Current

a. Set:

AC-GND-DC (both)	GND
VOLTS/DIV (both)	5 mV

b. Position trace to graticule center and change AC-GND-DC switch to DC.

c. CHECK—Trace shift is 0.1 division or less, when switching between GND and DC.

d. Set VERT MODE switches to display CH 1. Position trace to graticule center and change AC-GND-DC switch to DC.

e. CHECK—Trace shift is 0.1 division or less, when switching between GND and DC.

f. Set both AC-GND-DC switches to DC.

12. Check/Adjust Gain (R1482, R2025, R1882) (R1482, R2005, R1882 below SN B030000)

NOTE

It is not always necessary to do a complete readjustment to meet instrument gain specifications. Use following procedure to determine required adjustments.

a. Set:

VERT MODE	CH 2
CH 2 VOLTS/DIV	5 mV
CH 2 AC-GND-DC	DC

b. Connect calibration generator standard-amplitude output to CH 2 input via 50 Ω bnc cable. Set the generator for 20 mV output.

c. CHECK—Display is 4 divisions within 3% (4 divisions ±0.12 division).

d. Change CH 2 VOLTS/DIV and calibration generator settings as shown in Table 4-9 and check that deflection accuracy is within 3% for all VOLTS/DIV settings listed.

e. Set VERT MODE Switches to display CH 1 and set the CH 1 AC-GND-DC switch to DC.

f. Move the input signal from the CH 2 input connector to the CH 1 input connector.

g. CHECK—Display is 4 divisions within 3% (4 divisions ±0.12 division).

h. Change CH 1 VOLTS/DIV and calibration generator settings as shown in Table 4-9 and check that deflection accuracy is within 3% for all VOLTS/DIV settings listed.

Table 4-9

VERTICAL DEFLECTION ACCURACY

Volts/Div Setting	Calibration Generator Amplitude	Deflection in Div For 3% Accuracy		Reading In Div
		Divisions	Accuracy	
10 mV	50 mV	5	±0.15 div	4.85 to 5.15
20 mV	0.1 V	5	±0.15 div	4.85 to 5.15
50 mV	0.2 V	4	±0.12 div	3.88 to 4.12
.1 V	0.5 V	5	±0.15 div	4.85 to 5.15
.2 V	1 V	5	±0.15 div	4.85 to 5.15
.5 V	2 V	4	±0.12 div	3.88 to 4.12
1 V	5 V	5	±0.15 div	4.85 to 5.15
2 V	10 V	5	±0.15 div	4.85 to 5.15
5 V	20 V	4	±0.12 div	3.88 to 4.12

http://manoman.sqhill.com

i. If both channels check within 3%, no further vertical gain calibration is required. Proceed to step 13. If a check at any setting of the VOLTS/DIV switch falls outside the 3% accuracy limits, a complete gain recalibration is required. Continue with part j of this step.

j. Set CH 1 VOLTS/DIV switch to 5 mV and set the output of the calibration generator to 20 mV.

k. Set the test oscilloscope controls as follows:

Vertical Mode	Add
Invert	On (button in)
Volts/Div (both)	.1 V (with 10X probe)
Trlggering	Auto (free-running sweep)
A Trigger Source	Ext (no trigger applied)

l. Connect two 10X probes from the test oscilloscope to TP1519 and TP1319 on the 465B Vertical Preamplifier board. Connect the probe ground leads to chassis ground.

m. CHECK—Signal between TP1519 and TP1319 is 400 mV p-p (4 divisions).

n. ADJUST—CH 1 Gain Adjust (R1482) for 400 mV p-p.

NOTE

This is a nominal value for this adjustment. If may be reset to obtain correct CH 1 overall gain.

o. Remove 10X probes from TP1519 and TP1319.

p. CHECK—Display is 4 divisions within 3% (4 divisions ±0.12 division).

q. ADJUST—Output Gain Adjust R2025 (R2005 below SN B030000) on the Vertical Output board for a 4-division display.

r. Set CH 2 VOLTS/DIV to 5 mV and move the input signal from CH 1 input to CH 2 input. Set the VERT MODE switches to display CH 2.

s. ADJUST—CH 2 Gain Adjust (R1882) for a 4-division display.

t. Repeat parts e thorugh i to recheck the vertical deflection accuracy.

13. Check CH 1 and CH 2 Var Volts/Div Range

a. Set VERT MODE switches to display CH 2 and set both VOLTS/DIV switches to 10 mV and amplitude calibrator for 50 mV signal.

b. Rotate CH 2 VAR VOLTS/DIV control fully counterclockwise.

c. CHECK—Display reduces to 2 divisions or less.

d. Move signal to CH 1 input connector and set VERT MODE switches to display CH 1.

e. Rotate CH 1 VAR VOLTS/DIV control fully counterclockwise.

f. CHECK—Display reduces to 2 divisions or less.

g. Return both VAR VOLTS/DIV controls to calibrated detent.

14. Check ADD Mode

a. Set:

VOLTS/DIV (both)	5 mV
VERT MODE	ADD
INVERT	Normal (button out)

b. Connect calibration generator standard-amplitude output to both inputs via 50 Ω cables and dual-input coupler. Set generator output for 10 mV.

c. CHECK—Display of 4 divisions, within 3% (4 divisions ±0.12 division).

15. Check Compression and Expansion

a. Set:

CH 2 AC-GND-DC	GND
VERT MODE	CH 1

b. Adjust CH 1 VAR control for a 2 divisions display, centered about center horizontal graticule line.

http://manoman.sqhill.com

c. Position top of display to top graticule line.

d. CHECK—Display compression or expansion is 0.1 division or less.

e. Position bottom of display to bottom graticule line.

f. CHECK—Display compression or expansion is 0.1 division or less.

g. Set CH 1 VAR VOLTS/DIV control to calibrated detent.

h. Disconnect generator standard-amplitude output and dual-input coupler.

16. Check/Adjust Low-Frequency Compensation

a. Set:

A TIME/DIV	0.2 ms
VERT MODE	CH 1
AC-GND-DC (both)	DC
VOLTS/DIV (both)	5 mV
A TRIGGER LEVEL	As needed for stable display.

b. Connect calibration generator fast-rise + output to CH 1 input via a 50 Ω bnc cable, 10X attenuator, and 50 Ω bnc termination.

c. Adjust calibration generator to maintain a 5-division display throughout step 16.

d. CHECK—Display overshoot or rounding is within 3% (5 divisions ±0.15 division) for each A TIME/DIV and generator setting given in Table 4-10.

Table 4-10

MAXIMUM OVERSHOOT OR ROUNDING

Calibration Generator Signal	A Time/Div Setting	Maximum Overshoot or Rounding in Div
1 kHz	.2 ms	4.85 to 5.15
10 kHz	20 μs	4.85 to 5.15
100 kHz	2 μs	4.85 to 5.15

e. If above checks are within 3%, proceed to step 17; if not, continue with part f.

f. Set:

A TIME/DIV	0.2 ms
VERT MODE	CH 1, CH 2, and ALT
AC-GND-DC (both)	DC
VOLTS/DIV (both)	5 mV
A TRIGGER LEVEL	As needed for stable display
A TRIGGER SLOPE	− (minus)

g. Unplug cable connector from J4387 (Vert Alt Sync pulse) and insert plug into bnc-to-cable-connector adapter. Connect the square-wave output of low-frequency generator to the bnc-to-cable-connector adapter via a 50 Ω bnc cable. Set the generator output frequency to 1 kHz and adjust CH 1 and CH 2 Vertical POSITION controls for a 6-division display. Adjust A TRIGGER LEVEL control for a stable display. Presentation will be a square wave when the CH 1 and CH 2 traces alternate at the generator frequency.

NOTE

As an alternate signal source, use the fast-rise − (minus) output of the calibration generator. Do not terminate the cable and adjust the output amplitude to maximum.

h. ADJUST—Use the settings and adjustments in Table 4-11 and adjust the Vertical Output for best flat top within ±3%.

Table 4-11

VERTICAL OUTPUT LOW-FREQUENCY COMPENSATION

Square-wave Frequency	465B A Time/Div	Adjustment
1 kHz	0.2 ms	R2448 (R2550)[a]
10 kHz	20 μs	R2446 (R2540)[a]
100 kHz	2 μs	R2436 (R2535)[a] R2426 (R2520)[a]

[a] **Below SN B030000.**

INTERACTION—Repeat 1 kHz, 10 kHz, and 100 kHz until no further improvement is noted.

i. Unplug cable connector from bnc-to-cable-connector adapter and plug connector back into J4387.

http://manoman.sqhill.com

j. Set:

A TIME/DIV	2 μs
HORIZ DISPLAY	ALT

k. CHECK—TRACE SEP control *will move the B* trace at least ±4 vertical divisions from the A trace when rotating TRACE SEP control to fully clockwise and fully counterclockwise positions (A trace centered).

l. CHECK—B trace moves an equal distance above and below the A trace (≈4 divisions). Below SN B030000; ADJUST—Trace Sep Range Adjust R2035 for ±4 divisions of trace separation when rotating TRACE SEP control to fully clockwise and fully counterclockwise positions.

m. ADJUST—Trace Sep Centering R2117 so that the B trace moves an equal distance above and below the A Trace (≈4 divisions). Below SN B030000; ADJUST Trace Sep Comp adjust R2030 for minimum movement of the A Trace while rotating TRACE SEP control from fully clockwise to fully counterclockwise positions.

n. Set:

A TIME/DIV	0.2 ms
VERT MODE	CH 1
AC-GND-DC (both)	DC
VOLTS/DIV (both)	5 mV
HORIZ DISPLAY	A
A TRIGGER LEVEL	As needed for stable display
A TRIGGER SLOPE	+

o. Connect calibration generator fast-rise + output to CH 1 input connector via 50 Ω bnc cable, 10X attenuator, and 50 Ω termination. Set generator frequency to 1 kHz and adjust amplitude for a 6-division display. Adjust A TRIGGER LEVEL for a stable display.

p. ADJUST—Use the settings and adjustments in Table 4-12 to adjust the CH 1 low-frequency compensation for best flat top within ±3%.

Table 4-12

CH 1 LOW-FREQUENCY COMPENSATION

Square-Wave Frequency	465B A Time/Div	Adjustment
1 kHz	0.2 ms	R1176
10 kHz	20 μs	R1185
100 kHz	2 μs	R2432 (R2530)[a] and R2426 (R2520)[a] on Vertical Output board if needed. (See Table 4-13.)

[a] **Below SN B030000.**

q. Move the input signal from CH 1 input connector to CH 2 input connector and set VERT MODE switches to display CH 2.

r. ADJUST—Use the settings and adjustments in Table 4-13 to adjust the CH 2 low-frequency compensation for best flat top within ±3%.

Table 4-13

CH 2 LOW-FREQUENCY COMPENSATION

Square-Wave Frequency	465B A Time/Div	Adjustment
1 kHz	0.2 ms	R1580
10 kHz	20 μs	R1582
100 kHz	2 μs	R2432 (R2530)[a] and R2426 (R2520)[a] for best compromise between CH 1 and CH 2.

[a] **Below SN B030000.**

s. Disconnect calibration generator fast-rise + output from CH 2 input connector.

http://manoman.sqhill.com

17. Check/Adjust CH 1 Volts/Div Compensation

NOTE

C13010, in the CH 1 Preamplifier, is set at the factory to give C13010, in the CH 2 Preamplifier, enough range to match CH 2 input capacitance with CH 1 input capacitance. Unless there is a circuit malfunction, the CH 1 C13010 should not need readjustment. When adjusting either C13010, or other adjustments in this section, if the low-capacity screwdriver contains a metal bit, the metal may affect the adjustment. Check adjustment after the screwdriver is remove, and re-adjust as necessary.

a. Set:

VOLTS/DIV (both)	5 mV (see note below)
VERT MODE	CH 1
A TIME/DIV	0.2 ms (see note below)
20 MHz BW LIMIT	Limited bandwidth (button in)

NOTE

In steps 17 and 18, all VOLTS/DIV Checks and Adjustments require the use of a 10X probe with Scale-Factor Switching (preferably the probe supplied as a standard accessory with the oscilloscope you are calibrating). If it is necessary to use a 10X probe without Scale-Factor Switching, set the VOLTS/DIV knob to indicate one-tenth of the setting listed (5 mV instead of 50 mV, etc). When adjusting compensation, one adjustment will affect the waveform front corner, and another will affect the flat top. Ignore the front corner when making the flat top adjustment and vice-versa. The A TIME/DIV switch should be set to 1 ms for the flat-top, and to 0.2 ms for front corner checks and adjustments.

b. Connect a 10X probe to CH 1 input connector (note that the VOLTS/DIV Scale-Factor LED will now indicate 50 mV).

c. Connect calibration generator high-amplitude output to tip of the 10X probe via a 2X, 5X, or 10X bnc attenuator (depending on generator amplitude) and bnc-to-probe-tip adapter.

d. Set the calibration generator for a 5-division, 1 kHz display; add or remove attenuators or termination as needed to maintain a 5-division display throughout steps 17 and 18.

e. Adjust probe compensation adjustment for best flat-top waveform. Do not re-adjust probe compensation throughout the remainder of steps 18 and 19.

f. Set CH 1 VOLTS/DIV to 0.1 V.

g. CHECK—Compensation for all VOLTS/DIV settings listed in Table 4-14 for display overshoot, rounding, and flat-top, is within 2% (5 divisions ±0.1 division). If compensation setting is within 2%, skip part h; otherwise perform part h.

h. ADJUST—Any adjustment pair (see Table 4-14) as necessary so compensation for all settings of the VOLTS/DIV switch is within 2%.

18. Adjust CH 2 Volts/Div Compensation

a. Set:

VERT MODE	CH 2

b. Move the 10X probe connector from the CH 1 input to the CH 2 input connector.

c. Adjust calibration generator for a 5-division, 1 kHz display; add or remove attenuators or termination as needed to maintain a 5-division display throughout the remainder of this step.

d. CHECK—Display for flat-top waveform within 3% (±0.15 division).

e. ADJUST—C13010 in the CH 2 Preamplifier for best flat-top waveform using a low-capacitance screwdriver.

f. Repeat step 17, parts f through h for CH 2.

g. Disconnect test setup.

http://manoman.sqhill.com

Table 4-14

VOLTS/DIV COMPENSATION

Volts/Div Setting (10X Scale-Factor)	Adjust	
	Time/Div 1 ms Flat	Time/Div 0.2 ms Corner
.1 V	C37	C36
.2 V	C35	C34
.5 V	C33	C32
1 V	Check	Check
2 V	Check	Check
5 V	C31	C30

NOTE

If the oscilloscope is to be used primarily with a 50 Ω signal source, more accurate reproduction of the waveform front corner may be achieved by calibrating with a 50 Ω system. To accomplish this, substitute a properly terminated 50 Ω cable for the 10X probe while making the front corner adjustments listed in Table 4-14.

19. Check/Adjust CH 2 and Output High-Frequency Compensation

a. Set:

VOLTS/DIV (both)	5 mV
A TRIGGER SLOPE	+
20 MHz BW LIMIT	Full bandwidth (button out)

b. Connect calibration generator fast-rise + (positive-going) output to CH 2 input connector via a 50 Ω bnc cable, 10X bnc attenuator, and 50 Ω termination.

NOTE

Adjustments in steps 19 through 25 interact. Perform all of the checks, but not the adjustments, in these steps before making any adjustments (unless calibration is being performed after repair or replacement of vertical components).

If all checks are within the given limits, proceed to step 26.

If any of the checks are not within the given limits, perform checks and adjustments in steps 19 through 25, using low-capacitance screwdriver.

If still not within the given limits—perform steps 6 through 25.

c. Adjust calibration generator output for a 5-division, 100 kHz display.

d. Set A TIME/DIV to 0.2 μs.

e. CHECK—Flat-top display aberrations are within 4% (±0.2 division). See Figure 4-1 for typical display.

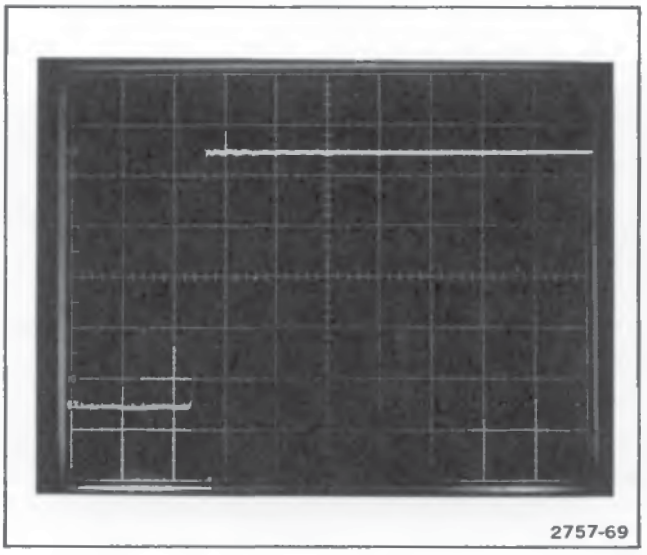

Figure 4-1. Typical display when high-frequency compensation is correctly adjusted.

f. ADJUST—R1685, C1690, R1634, C1643, C2315 (C2308 below SN B030000), R2325 (R2312 below SN B030000), R2243 (R2245 below SN B030000), and C2346 (C2350 below SN B030000), for best flat-top waveform with fastest rise time.

g. Connect test setup to fast-rise − (negative-going) output of calibration generator.

h. Set A TRIGGER SLOPE to −.

i. CHECK—Flat-bottom display aberrations are within 6% (±0.3 division).

20. Check CH 2 Position Effect

a. Position bottom of display to top graticule line.

b. CHECK—Display aberrations are within 8% (±0.4 division).

c. Set A TRIGGER SLOPE to +.

http://manoman.sqhill.com

d. Connect test setup to fast-rise + output of calibration generator.

e. Position top of display to bottom graticule line.

f. CHECK—Display aberrations are within 6% (±0.3 division).

21. Check/Adjust CH 1 High-Frequency Compensation

a. Set VERT MODE switches to display CH 1.

b. Move test signal from CH 2 input to CH 1 input connector.

c. CHECK—Flat-top display aberrations are with 4% (±0.2 division). See Figure 4-1 for typical display.

d. ADJUST—R1190, C1192, R1335, and C1342 for best flat-top display.

INTERACTION—It may be necessary to compromise Vertical Output adjustment and CH 2 adjustment for best high-frequency match between CH 1 and CH 2.

e. Connect test setup to fast-rise − output of calibration generator.

f. Set A TRIGGER SLOPE to −.

g. CHECK—Flat-bottom display aberrations are within 6% (±0.3 division).

22. Check CH 1 Position Effect

a. Position bottom of display to top graticule line.

b. CHECK—Display aberrations are within 8% (±0.4 division).

c. Set A TRIGGER SLOPE to +.

d. Connect test setup to fast-rise + output of calibration generator.

e. Position top of display to bottom graticule line.

f. CHECK—Display aberrations are within 6% (±0.3 division).

23. Check CH 1 Transient Response

a. Verify that A TRIGGER SLOPE is set to + and that the calibration generator fast-rise + output is connected to CH 1 input via a 50 Ω bnc cable, 10X bnc attenuator, and 50 Ω bnc termination.

b. Adjust generator and add or remove attenuators as necessary to maintain a 5-division display throughout the checks of the 5 mV, 10 mV, 20 mV, and 50 mV positions of CH 1 VOLTS/DIV switch.

c. CHECK—Display flat-top and aberrations are within 4% (±0.2 division) for each position of the VOLTS/DIV switch given in part b.

24. Check CH 2 Transient Response

a. Set VERT MODE switches to display CH 2.

b. Move test setup to CH 2 input connector.

c. Adjust generator and add or remove attenuators as necessary to maintain a 5-division display throughout the checks of the 5 mV, 10 mV, 20 mV and 50 mV positions of CH 2 VOLTS/DIV switch.

d. CHECK—Display flat-top and aberrations are within 4% (±0.2 division) for each position of the VOLTS/DIV switch given in part c.

25. Check Bandwidth

a. Set:

A TIME/DIV	0.2 ms
CH 2 VOLTS/DIV	5 mV

b. Connect leveled sine-wave generator reference signal to CH 2 input via a 50 Ω bnc cable, 10X attenuator, and 50 Ω termination.

c. Adjust generator for 5-division display.

d. Set generator for 100 MHz output frequency.

e. CHECK—Display amplitude is 3.5 divisions or more.

http://manoman.sqhill.com

f. Repeat step 25 parts c, d, and e, for 10 mV through 1 V positions of CH 2 VOLTS/DIV switch.

g. Change VERT MODE switches to display CH 1. Move test setup to CH 1 input.

h. Repeat step 25, parts c, d, and e, for 5 mV through 1 V positions of CH 1 VOLTS DIV switch.

i. Disconnect test setup.

26. Check Cascaded Gain and Bandwidth

a. Set:

VOLTS/DIV (both)	5 mV
AC-GND-DC (both)	AC
VERT MODE	CH 2
A TIME/DIV	1 ms

b. Connect CH 1 VERT SIGNAL OUT (on 465B rear panel) to CH 2 input connector via 50 Ω bnc cable and 50 Ω termination.

c. Connect calibration generator standard-amplitude output to CH 1 input connector via 50 Ω bnc cable. Set generator output to 5 mV.

d. CHECK—Display amplitude is 5 divisions or more.

e. Remove test setup from CH 1 input.

f. Connect leveled sine-wave generator reference signal output to CH 1 input via 50 Ω bnc cable, 10X attenuator, and 50 Ω termination.

g. Adjust generator output for a 5-division display.

h. Set generator for 50 MHz output frequency.

i. CHECK—Display amplitude is 3.5 divisions or more.

j. Disconnect test setup.

27. Check Channel Isolation

a. Set:

CH 2 VOLTS/DIV	0.2 V
VERT MODE	CH 2
CH 1 AC-GND-DC	GND

b. Connect leveled sine-wave generator output to CH 2 input via 50 Ω bnc cable, and 50 Ω termination.

c. Set generator for 25 MHz and adjust output for a 2-division display.

d. Set:

VOLTS/DIV (both)	20 mV
VERT MODE	CH 1
A TRIGGER SOURCE	CH 2
A TRIGGER LEVEL	As needed for a stable display

e. CHECK—Display amplitude is 0.2 division or less.

f. Move test setup from CH 2 input to CH 1 input connector.

g. Set:

CH 1 AC-GND-DC	DC
CH 2 AC-GND-DC	GND
VERT MODE	CH 2
A TRIGGER SOURCE	CH 1
A TRIGGER LEVEL	As needed for a stable display

h. CHECK—Display amplitude is 0.2 division or less.

i. Disconnect test setup.

28. Check/Adjust Common-Mode Rejection Ratio (R1882)

a. Set:

VOLTS/DIV (both)	20 mV
AC-GND-DC (both)	DC
A TRIGGER SOURCE	NORM
VERT MODE	CH 1
CH 2 INVERT	Inverted (button in)

http://manoman.sqhill.com

b. Connect leveled sine-wave generator output to CH 1 and CH 2 input connectors via 50 Ω bnc cable, 10X attenuator, 50 Ω termination, and dual-input coupler.

c. Set generator frequency to 20 MHz and adjust output for a 6-division display.

d. Set VERT MODE switches for ADD only (press CH 1 VERT MODE to remove CH 1 trace from crt display).

e. CHECK—Display is 0.6 division or less (indicates CMRR of at least 10:1 at 20 MHz).

f. Proceed to part m if the check in part e meets the requirements. If the CMRR is less than 10:1, continue with this procedure.

g. Set VERT MODE switches to display CH 1.

h. Set generator frequency to 50 kHz and adjust output for a 6-division display.

i. Set VERT MODE switches to display ADD only.

j. ADJUST—CH 2 Gain Adjust (R1882) for minimum display (best CMRR).

k. Set generator frequency to 20 MHz.

l. CHECK—Display is 0.6 division or less (indicates CMRR of at least 10:1 at 20 MHz).

m. Press CH 2 INVERT push button to release; disconnect test setup.

29. Check Bandwidth Limit Operation

a. Set:

20 MHz BW LIMIT	Limited bandwidth (button in)
CH 1 AC-GND-DC	DC
VERT MODE	CH1

b. Connect leveled sine-wave generator reference signal output to CH 1 input connector via 50 Ω bnc cable and 50 Ω termination.

c. Adjust generator output amplitude for a 6-division display.

d. Increase generator frequency until display is 4.2 divisions.

e. CHECK—Generator output frequency is 16 to 24 MHz.

f. Disconnect test setup.

30. Check/Adjust Trigger View Centering and Gain (R7526, R7439)

a. Set:

A TRIGGER COUPLING	AC
A TRIGGER SOURCE	EXT
A TRIGGER LEVEL	0
A TIME/DIV	0.2 ms
VERT MODE	A TRIG VIEW

b. Connect the calibration generator standard-amplitude signal to the A External Trigger input connector via a 50 Ω bnc cable. Set the generator for 0.5 V output.

c. CHECK—Display amplitude is 5 divisions ±5% (5 divisions ±0.25 division) and that display will trigger symmetrically within one division of the center horizontal graticule line when the A TRIGGER SLOPE is switched between + and −.

d. ADJUST—Trig View Centering (R7526) to center the display about the center horizontal graticule line.

e. ADJUST—Trig View Gain (R7439) for a 5-division display.

f. INTERACTION—Between Trig View Centering and Trig View Gain adjustments. Repeat both for no visible interaction.

g. Disconnect the calibration generator standard-amplitude signal from the A External Trigger input.

31. Check/Adjust Trigger View Low-Frequency Compensation (C7505, C7506)

a. Connect the calibration generator high-amplitude output to the A External Trigger input connector via a 50 Ω bnc cable. (Check generator output to see if termination is required.)

http://manoman.sqhill.com

b. Set calibration generator for a 5-division display at 1 kHz.

c. CHECK—Square wave has less than 10% overshoot or rounding (±0.5 division).

d. ADJUST—C7505 for best flat top on square-wave display.

e. Change A TRIGGER SOURCE to EXT/10 and adjust calibration generator output amplitude for a 5-division display.

f. CHECK—Square wave has less than 10% overshoot or rounding (±0.5 division).

g. ADJUST—C7506 for best flat top on square-wave display.

h. Remove bnc cable from high-amplitude output on the calibration generator.

32. Check/Adjust Trigger View High-Frequency Compensation (C7425, C7529, and R7423)

a. Set:

A TIME/DIV	0.2 μs
A TRIGGER SOURCE	EXT

b. Connect fast-rise + output from calibration generator to the A External Trigger input connector via a 50 Ω bnc cable and a 50 Ω termination. Set the calibration generator to 100 kHz and adjust output amplitude for a 5-division display.

c. CHECK—Square-wave front corner has less than ±10% aberration (±0.5 division).

d. ADJUST—C7425, R7423, and C7529 for best front corner and square-wave rise time of 5 ns or less.

e. Disconnect calibration generator.

33. Check/Adjust Zero Trigger View Delay (R6011 and R6152)

NOTE

For instruments equipped with DM44 Option, access to R6011 and R6152 is through a hole in the DM44 circuit board. See the DM44 Instruction manual, Test Points and Adjustment Location foldout, for the location of these adjustments.

a. Set:

VERT MODE	CH 1 and A TRIG VIEW
HORIZ DISPLAY	A
A TIME/DIV	0.02 μs
X10 MAG	On (button in)
A TRIGGER SOURCE	EXT
A TRIGGER COUPLING	AC
CH 1 VOLTS/DIV	0.1 V

b. Connect output of sine-wave generator via bnc T, two 42-inch (equal length) 50 Ω bnc cables, and 50 Ω terminations; one to the CH 1 input connector, and one to the A External Trigger input connector. Set sine-wave generator frequency to 40 MHz and adjust output for a 6-division A TRIG VIEW display. Adjust CH 1 VAR and VOLTS/DIV to match CH 1 display amplitude to A TRIG VIEW display amplitude.

c. CHECK—Time difference with displays superimposed is ≤0.15 horizontal graticule division.

d. ADJUST—R6011 for zero time difference between CH 1 display and A TRIG VIEW display.

e. Set:

HORIZ DISPLAY	B DLY'D
A TIME/DIV	0.2 μs
B TIME/DIV	0.02 μs

f. CHECK—Time difference with displays superimposed is ≤0.15 horizontal graticule division.

g. ADJUST—R6152 for zero time difference between CH 1 display and A TRIG VIEW display.

h. Disconnect test setup.

http://manoman.sqhill.com

TRIGGERS

Equipment Required

1. Leveled Sine-wave Generator
2. Low-frequency Generator
3. Time Mark Generator
4. Calibration Generator
5. 50 Ω Signal Pickoff Unit (Type CT-3)
6. 10X Probe
7. 42-inch Bnc Cable (2 required)
8. Gr-to-bnc-female Adapter
9. Gr-to-bnc-male Adapter
10. 10X Bnc Attenuator
11. 50 Ω BNC Termination (2 required)
12. Dual-input Coupler (2 required)
13. Bnc T Connector
14. 3-inch Slotted Screwdriver

See ADJUSTMENT LOCATIONS 2 *and* ADJUSTMENT LOCATIONS 4 *in the Diagrams section for adjustments and test points (TP).*

465B Control Settings

Regulating Range Selector	Medium
Line Voltage Selector	115 V
POWER	ON

CRT Controls

INTENSITY	As desired
FOCUS	Best focused display
SCALE ILLUM	As desired

Vertical Controls (both channels if applicable)

VOLTS/DIV	10 mV
VAR	Calibrated detent
POSITION	Midrange
AC-GND-DC	DC
VERT MODE	CH 1
INVERT	Off (button out)
20 MHz BW LIMIT	Full bandwidth (button out)

Triggering Controls (both A and B if applicable)

LEVEL	Adjust as needed for a stable display
SLOPE	+
COUPLING	AC
SOURCE	NORM
TRIG MODE	AUTO

Sweep Controls

HORIZ DISPLAY	A
DELAY TIME POSITION	Fully counterclockwise
A TIME/DIV	0.05 μs
B TIME/DIV	0.05 μs
VAR TIME/DIV	Calibrated detent
X10 MAG	Off (button out)
POSITION	Midrange
A TRIGGER HOLDOFF	NORM

1. Check/Adjust A Trigger Sensitivity and TRIG LED (R7246)

a. Connect a 10 MHz signal from the leveled sine-wave generator to the A and B External Trigger inputs via a GR-to-bnc-male adapter, CT-3 through output, GR-to-bnc-female adapter, 50 Ω bnc cable, 10X attenuator, 50 Ω termination and dual-input coupler.

http://manoman.sqhill.com

b. Connect CT-3 Sig Out 10% signal to CH 1 and CH 2 inputs via a 50 Ω bnc cable, 50 Ω termination and a dual-input coupler.

c. Adjust the leveled sine-wave generator for a 3-division display.

d. Set the CH 1 VOLTS/DIV switch to 0.1 V (0.3-division display).

e. CHECK—Stable display can be obtained by rotating A TRIGGER LEVEL control in both + and − slopes.

f. CHECK—TRIG LED is on when the display is stable.

g. Set CH 1 VOLTS/DIV switch to 5 mV and adjust leveled sine-wave generator for a 2-division display.

h. Set CH 1 VOLTS/DIV switch to 0.1 V (0.1-division display).

i. CHECK—Stable display cannot be obtained by rotating A TRIGGER LEVEL control in both + and − slopes. Return the A TRIGGER SLOPE control to +.

j. If the checks in parts c through i meet the requirements, proceed to step 2. If not, make the following adjustments.

k. Set the CH 1 VOLTS/DIV switch to 10 mV and adjust the leveled sine-wave generator for a 2.5-division display.

l. Set the CH 1 VOLTS/DIV switch to 0.1 V (0.25-division display).

m. ADJUST—A Trigger Sensitivity (R7246) so display can just be triggered by rotating A TRIGGER LEVEL control (A TRIGGER SLOPE in +).

n. Set CH 1 VOLTS/DIV switch to 10 mV and adjust the leveled sine-wave generator for a 2-division display.

o. Set the CH 1 VOLTS/DIV switch to 0.1 V (0.2-division display).

p. CHECK—Stable display cannot be obtained by adjusting the A TRIGGER LEVEL control in + slope only (− slope is generally slightly more sensitive).

q. If a stable display can be obtained, then the trigger is too sensitive. Adjust A Trigger Sensitivity (R7246) slightly so display will just barely not trigger by adjusting the A TRIGGER LEVEL control (in + slope only).

r. Repeat parts k through p until a stable display can be obtained on a 0.25-division display, but not on a 0.2-division display (+ slope only).

q. Repeat checks in parts c through i.

2. Check/Adjust B Trigger Sensitivity (R7045)

a. Set:

HORIZ DISPLAY	B DLY'D
CH 1 VOLTS/DIV	10 mV
A TRIGGER LEVEL	Fully clockwise
B TRIGGER LEVEL	As needed for a stable display.

b. Adjust leveled sine-wave generator for a 3-division display.

c. Set the CH 1 VOLTS/DIV switch to 0.1 V (0.3-division display).

d. CHECK—Stable display can be obtained by rotating B TRIGGER LEVEL control in both + and − slopes.

e. Set CH 1 VOLTS/DIV switch to 5 mV and adjust the sine-wave generator for a 2-division display.

f. Set the CH 1 VOLTS/DIV switch to 0.1 V (0.1-division display).

g. CHECK—Stable display cannot be obtained by rotating the B TRIGGER LEVEL control in either + or − slope. Return B TRIGGER SLOPE control to +.

h. If check results in parts b through g meet requirements, proceed to step 3. If not, make the following adjustments.

http://manoman.sqhill.com

i. Set CH 1 VOLTS/DIV switch to 10 mV and adjust leveled sine-wave generator for a 2.5-division display.

j. Set the CH 1 VOLTS/DIV switch to 0.1 V (0.25-division display).

k. ADJUST—B Trigger Sensitivity (R7045) so display can be just triggered by adjusting B TRIGGER LEVEL control. (Adjust with B TRIGGER SLOPE in +).

l. Set the CH 1 VOLTS/DIV switch to 10 mV and adjust the leveled sine-wave generator for a 2-division display.

m. Set the CH 1 VOLTS/DIV switch to 0.1 V (0.2-division display).

n. CHECK—Stable display cannot be obtained by adjusting the B TRIGGER LEVEL control (+ slope only).

o. If stable display can be obtained, then trigger is too sensitive. Adjust B Trigger Sensitivity (R7045), slightly so display will just barely not trigger by adjusting B TRIGGER LEVEL control (+ slope only).

p. Repeat parts i through o until stable display can be obtained on a 0.25 division display but not on a 0.2 division display (+ slope only).

q. Repeat checks in parts c through g.

3. Check/Adjust B Trigger Slope Center and Level (R7042, R7026)

a. Set:

B TRIGGER SOURCE	STARTS AFTER DELAY
TIME/DIV (both)	10 μs
B TRIGGER LEVEL	0
CH 1 VOLTS/DIV	10 mV
CH 1 AC-GND-DC	GND

NOTE

The B TRIGGER LEVEL control must remain at 0 throughout this step.

b. Position the trace to the center horizontal graticule line.

c. Set:

CH 1 AC-GND-DC	DC
B TRIGGER SOURCE	NORM

d. Adjust the leveled sine-wave generator for approximately a 4-division display at 50 kHz.

e. Switch the B TRIGGER SLOPE switch between + and −.

f. CHECK—Display begins at about the same vertical point, within 1 division of graticule center, in both + and − slopes.

g. ADJUST—B Slope Center (R7042) for the display to start at the same vertical point on the sine wave in both + and − slopes (not necessarily the center horizontal graticule line). Return B TRIGGER SLOPE to +.

h. ADJUST—B Trig Level (R7026) to move the starting point of the display to the center horizontal graticule line.

i. INTERACTION—B Trig Level (R7026) B Slope Center (R7042), and B Trigger Sensitivity (R7045) will interact. Repeat these adjustments until no improvement is noted.

4. Check/Adjust A Trigger Slope Center and Level (R7242, R7224)

a. Set:

HORIZ DISPLAY	A
A TRIGGER LEVEL	0

NOTE

The A TRIGGER LEVEL control must remain at 0 throughout this step.

b. Switch the A TRIGGER SLOPE switch between + and −.

c. CHECK—Display begins at about the same vertical point, within 1 division of graticule center, in both + and − slopes.

d. ADJUST—A Slope Center (R7242) for the display to start at the same vertical point on the sine wave in both + and − slopes (not necessarily the graticule center). Return A TRIGGER SLOPE to +.

http://manoman.sqhill.com

e. ADJUST—A Trig Level (R7224) to move the starting point of the display to the center horizontal graticule line.

f. INTERACTION—A Trig Level (R7224), A Trigger Sensitivity (R7246), and A Slope Center (R7242) will interact. Repeat these adjustments until no improvement is noted.

5. Check/Adjust A Trigger DC Levels (R1202, R1126, R1835)

a. Set the A TRIGGER COUPLING switch to DC.

NOTE

The A TRIGGER LEVEL control must remain at 0 throughout this step.

b. CHECK—Start of the display is within 1 division of the center horizontal graticule line in both + and − slopes. Return A TRIGGER SLOPE to +.

c. ADJUST—Norm Trig DC Balance (R1202) to move the starting point of the display to the center horizontal graticule line.

d. INTERACTION—A and B Trig Level (R7224 and R7026) interact with Norm Trig DC Balance (R1202). Repeat these adjustments until no improvement is noted.

e. Set the A TRIGGER SOURCE switch to CH 1.

f. CHECK—Start of the display is within 1 division of the center horizontal graticule line in both + and − slopes. Return A TRIGGER SLOPE to +.

g. ADJUST—CH 1 Trig DC Balance (R1126) to move the starting point of the display to the center horizontal graticule line.

h. Set the A TRIGGER SOURCE Switch to CH 2.

i. CHECK—Start of the display is within 1 division of the center horizontal graticule line in both + and − slopes. Return A SLOPE to +.

j. ADJUST—CH 2 Trig DC Balance (R1835) to move the starting point of the display to the center horizontal graticule line.

6. Check B Trigger DC Levels

a. Set:

HORIZ DISPLAY	B DLY'D
A TRIGGER LEVEL	Fully clockwise
B TRIGGER LEVEL	0
B TRIGGER COUPLING	DC
B TRIGGER SOURCE	NORM

NOTE

The B TRIGGER LEVEL control must remain at 0 during this step.

b. CHECK—Start of the display is within 1 division of the center horizontal graticule line for the following modes:

B TRIGGER SOURCE
NORM
CH 1
CH 2

7. Check B Internal 10 MHz Triggering

a. Set:

TRIGGER COUPLING (both)	AC
CH 1 VOLTS/DIV	10 mV
CH 2 VOLTS/DIV	0.1 V
A TIME/DIV	0.2 μs
B TIME/DIV	0.05 μs
TRIGGER SOURCE (both)	NORM

b. Adjust the leveled sine-wave generator for a 3-division (30 mV) display at 10 MHz.

c. Set the CH 1 VOLTS/DIV switch to 0.1 V (0.3-division display).

d. Adjust the B TRIGGER LEVEL control as needed for a stable display.

e. CHECK—For a stable display, with both + and − slopes for these modes:

B TRIGGER	
SOURCE	COUPLING
NORM	AC, DC
CH 1	DC, AC
CH 2	AC, DC

http://manoman.sqhill.com

f. Set:

CH 1 VOLTS/DIV	10 mV
B TRIGGER COUPLING	LF REJ

g. Adjust the leveled sine-wave generator for a 5-division (50 mV) display at 10 MHz.

h. Set the CH 1 VOLTS/DIV switch to .1 V (0.5-division display).

i. Adjust B TRIGGER LEVEL control as needed for a stable display.

j. CHECK—For a stable display, with both + and − slopes for these modes:

B TRIGGER SOURCE

CH 2
CH 1
NORM

k. Set the B TRIGGER COUPLING switch to HF REJ.

l. CHECK—No stable display for these modes:

B TRIGGER SOURCE

NORM
CH 1
CH 2

8. Check A Internal 10 MHz Triggering

a. Set:

HORIZ DISPLAY	A
A TIME/DIV	0.05 μs
A TRIGGER LEVEL	As needed for a stable display
CH 1 VOLTS/DIV	10 mV

b. Adjust the leveled sine-wave generator for a 3-division (30 mV) display at 10 MHz.

c. Set the CH 1 VOLTS/DIV switch to .1 V (0.3-division display).

d. Adjust the A TRIGGER LEVEL control as needed for a stable display.

e. CHECK—For a stable display, with both + and − slopes for these modes:

A TRIGGER

SOURCE	COUPLING
NORM	AC, DC
CH 1	DC, AC
CH 2	AC, DC

f. Set:

CH 1 VOLTS/DIV	10 mV
A TRIGGER COUPLING	LF REJ

g. Adjust the leveled sine-wave generator for a 5-division (50 mV) display at 10 MHz.

h. Set the CH 1 VOLTS/DIV switch to .1 V (0.5-division display).

i. Adjust the A TRIGGER LEVEL control as needed for a stable display.

j. CHECK—For a stable display, with both + and − slopes for these modes:

A TRIGGER SOURCE

CH 2
CH 1
NORM

k. Set the A TRIGGER COUPLING switch to HF REJ.

l. CHECK—No stable display for these modes:

A TRIGGER SOURCE

NORM
CH 1
CH 2

9. Check A External 10 MHz Triggering

a. Set:

VOLTS/DIV (both)	10 mV
TRIGGER COUPLING (both)	AC
TRIGGER SOURCE (both)	EXT

http://manoman.sqhill.com

b. Adjust the leveled sine-wave generator to maintain a 5-division display throughout steps 9 and 10. Adjust the A TRIGGER LEVEL control as needed for a stable display.

c. CHECK—For a stable display, with both + and − slopes fo these modes:

A TRIGGER COUPLING

AC, DC

d. Set:

CH 1 VOLTS/DIV	20 mV
A TRIGGER COUPLING	LF REJ

e. Adjust the leveled sine-wave generator for a 5-division (100 mV) display at 10 MHz.

f. Adjust the A TRIGGER LEVEL control as needed for a stable display.

g. CHECK—For a stable display, with both + and − slopes.

h. Set the A TRIGGER COUPLING switch to HF REJ.

i. CHECK—No stable display.

j. Remove the 10X bnc attenuator from the external trigger setup and change the A TRIGGER SOURCE switch to EXT/10.

k. CHECK—No stable display.

l. Set the A TRIGGER COUPLING switch to LF REJ.

m. CHECK—For a stable display, with both + and − slopes.

n. Set:

CH 1 VOLTS/DIV	10 mV
A TRIGGER COUPLING	AC

o. Adjust the leveled sine-wave generator for a 5-division (50 mV) display at 10 MHz (0.5 volt at the external Trigger Input).

p. CHECK—For a stable display, with both + and − slopes for these modes:

A TRIGGER COUPLING

AC, DC

10. Check B External 10 MHz Triggering

a. Set:

HORIZ DISPLAY	B DLY'D
A TIME/DIV	0.2 μs
B TIME/DIV	0.05 μs

b. Reconnect the 10X bnc attenuator to the external trigger setup.

c. CHECK—For a stable display, with both + and − slopes for these modes:

B TRIGGERING COUPLING

AC, DC

d. Set the CH 1 VOLTS/DIV switch to 20 mV.

e. Adjust the leveled sine-wave generator for a 5-division (100 mV) display at 10 MHz.

f. Set the B TRIGGER COUPLING switch to LF REJ and adjust the B TRIGGER LEVEL control as needed for a stable display.

g. CHECK—For a stable display, with both + and − slopes.

h. Set the B TRIGGER COUPLING switch to HF REJ.

i. CHECK—No stable display.

11. Check B and A External 100 MHz Triggering

a. Set:

TRIGGER COUPLING (both)	AC
TRIGGER SOURCE (both)	EXT
CH 1 VOLTS/DIV	50 mV

http://manoman.sqhill.com

c. Adjust the leveled sine-wave generator for a 3-division (150 mV) display at 10 MHz; then change the generator frequency to 100 MHz. Do not readjust signal amplitude.

d. Press the X10 MAG push button in and use the A and B TRIGGER LEVEL controls as needed for a stable display.

e. CHECK—For a stable display, with 0.1 division or less jitter, with + and − slopes for these modes:

B TRIGGER COUPLING

AC, DC

f. Adjust the leveled sine-wave generator for a 6-division (300 mV) display at 10 MHz; then change the generator frequency to 100 MHz. Do not readjust the signal amplitude.

g. Set the B TRIGGER COUPLING switch to LF REJ and use the A and B TRIGGER LEVEL controls as needed.

h. CHECK—For a stable display, with 0.1 division or less jitter, with both + and − slopes.

i. Set the B TRIGGER COUPLING switch to HF REJ.

j. CHECK—No stable display.

k. Set:

HORIZ DISPLAY	A
A TIME/DIV	0.05 μs
A TRIGGER SOURCE	LF REJ
A TRIGGER SOURCE	EXT
A TRIGGER LEVEL	As needed.

l. CHECK—For a stable display, with 0.1 division or less jitter, with both + and − slopes.

m. Set the A TRIGGER COUPLING switch to HF REJ.

n. CHECK—No stable display.

o. Set the A TRIGGER COUPLING switch to AC.

p. Adjust the leveled sine-wave generator for a 3-division (150 mV) display at 10 MHz; then change the generator frequency to 100 MHz. Do not readjust the signal amplitude.

q. Use the A TRIGGER LEVEL control as needed for a stable display.

r. CHECK—For a stable display, with 0.1 division or less jitter, with both + and − slopes:

A TRIGGER COUPLING

AC, DC

t. Remove the 10X bnc attenuator from the external trigger setup and change the A TRIGGER SOURCE switch to EXT/10.

u. Use the A TRIGGER LEVEL control as needed for a stable display.

v. CHECK—For a stable display, with 0.1 division or less jitter, with both + and − slopes for these modes:

A TRIGGER COUPLING

DC, AC

w. Adjust the leveled sine-wave generator for a 6-division (300 mV) display at 10 MHz; then change the generator frequency to 100 MHz. Do not readjust the signal amplitude.

x. Set the A TRIGGER COUPLING switch to LF REJ and use the A TRIGGER LEVEL control as needed for a stable display.

y. CHECK—For a stable display, with 0.1 division or less jitter, with both + and − slopes.

z. Set the A TRIGGER COUPLING switch to HF REJ.

aa. CHECK—No stable display.

12. CHECK A Internal 100 MHz Triggering

a. Set:

VOLTS/DIV (both)	50 mV
TRIGGER SOURCE (both)	NORM
TRIGGER COUPLING (both)	AC

http://manoman.sqhill.com

b. Reconnect the 10X attenuator to the external trigger setup. Adjust the leveled sine-wave generator for a 1.5-division display at 100 MHz.

c. CHECK—For a stable display, with 0.1 division or less jitter, with + and − slopes for these modes:

A TRIGGER

SOURCE	COUPLING
NORM	AC, LF REJ, DC
CH 1	DC, LF REJ, AC
CH 2	AC, LF REJ, DC

d. Set the A TRIGGER COUPLING switch to HF REJ.

e. CHECK—No stable display.

13. Check B Internal 100 MHz Triggering

a. Set:

HORIZ DISPLAY	B DLY'd
A TIME/DIV	0.2 μs
B TIME/DIV	0.05 μs
A TRIGGER COUPLING	DC
A TRIGGER SOURCE	NORM

b. CHECK—For a stable display, with 0.1 division or less jitter, with + and − slopes, for these modes:

B TRIGGER

SOURCE	COUPLING
NORM	AC, LF REJ, DC
CH 1	DC, LF REJ, AC
CH 2	AC, LF REJ, DC

NOTE

It may be necessary to adjust both A and B TRIGGER LEVEL controls to obtain the most stable display at higher frequencies in B sweep.

c. Set the B TRIGGER COUPLING switch to HF REJ.

d. CHECK—No stable display.

14. Check A and B High Frequency Reject Triggering

a. Set:

HORIZ DISPLAY	A
TIME/DIV (both)	10 μs
X/10 MAG	Off (button out)
TRIGGER COUPLING (both)	HF REJ
TRIGGER SOURCE (both)	NORM
CH 1 VOLTS/DIV	.1 V
CH 2 VOLTS/DIV	10 mV
VERT MODE	CH 2

b. Adjust leveled sine-wave generator for a 5-division (50 mV) display at 50 kHz.

c. Set the CH 2 VOLTS/DIV switch to .1 V. Adjust A TRIGGER LEVEL control for stable display.

d. Adjust leveled sine-wave generator for 1 MHz and press the X10 MAG push button in.

e. CHECK—No stable display with the A TRIGGER SOURCE switch in NORM, CH 1, or CH 2.

g. Set:

A TRIGGER LEVEL	Fully clockwise
HORIZ DISPLAY	B DLY'D

h. CHECK—No stable display with the B TRIGGER SOURCE switch in NORM, CH 1, or CH 2.

15. Check Single Sweep

a. Set:

HORIZ DISPLAY	A
CH 1 VOLTS/DIV	50 mV
VERT MODE	CH 1
X10 MAG	Off (button out)

A TRIGGER

COUPLING	AC
SOURCE	NORM
LEVEL	0
SLOPE	+

b. Adjust the leveled sine-wave generator for a 1-division display at 50 kHz and adjust the A TRIGGER LEVEL control so the display is just triggered.

http://manoman.sqhill.com

c. Set:

TIME/DIV (both)	10 ms
CH 1 AC-GND-DC	GND
A TRIG MODE	SINGL SWP (push in)

d. CHECK—READY LED Illuminates.

e. Set the CH 1 AC-GND-DC switch to DC.

f. CHECK—A single sweep occurs and the READY LED goes out.

g. Press the SINGLE SWP push button in.

h. CHECK—A single sweep occurs each time the SINGL SWP push button is depressed.

i. Remove the test setup.

16. Check 60 Hz Internal Triggering

a. Set:

TIME/DIV (both)	5 ms
TRIGGER MODE	NORM
CH 1 VOLTS/DIV	10 mV

b. Connect the low-frequency generator signal to the CH 1 input via a 50 Ω bnc cable, bnc T and 50 Ω bnc termination. From bnc T, connect a 50 Ω bnc cable and 50 Ω bnc termination to the B External Trigger input.

c. Adjust the low-frequency generator for a 3-division (30 mV) display at 60 Hz.

d. Set the CH 1 VOLTS/DIV switch to .1 V (0.3-division display).

e. CHECK—For a stable display, with both + and − slopes for these modes:

TRIGGER COUPLING

AC, DC

f. Set:

CH / VOLTS/DIV	10 mV
A TRIGGER COUPLING	HF REJ

g. Set the low-frequency generator for a 5-division (50 mV) display at 60 Hz.

h. Set the CH 1 VOLTS/DIV switch to 0.1 V (0.5-division display).

i. CHECK—For a stable display, with both + and − slopes.

j. Set the A TRIGGER COUPLING switch to LF REJ.

k. CHECK—No stable display.

l. Set:

A TRIG MODE	AUTO
A TRIGGER LEVEL	Fully clockwise
A TIME/DIV	10 ms
B TIME/DIV	5 ms
B TRIGGER SOURCE	NORM
B TRIGGER COUPLING	HF REJ
HORIZ DISPLAY	B DLY'D
CH 1 VOLTS/DIV	0.1 V

m. CHECK—For a stable display, with both + and − slopes.

n. Set the B TRIGGER COUPLING switch to LF REJ.

o. CHECK—No stable display.

p. Set:

CH 1 VOLTS/DIV	10 mV
B TRIGGER COUPLING	AC

q. Set the low-frequency generator for a 3-division (30 mV) display at 60 Hz.

r. Set the CH 1 VOLTS/DIV switch to 0.1 V and use the B TRIGGER LEVEL control as needed for a stable display.

s. CHECK—For a stable display, with both + and − slopes for these modes:

B TRIGGER COUPLING

AC, DC

http://manoman.sqhill.com

17. Check 60 Hz External Triggering

a. Set:

B TRIGGER COUPLING	AC
CH 1 VOLTS/DIV	10 mV

b. Adjust the low-frequency generator for a 5-division (50 mV) display at 60 Hz.

c. Set the B TRIGGER SOURCE switch to EXT.

d. CHECK—For a stable display, with both + and − slopes for these modes:

B TRIGGER COUPLING

AC, HF REJ, DC

e. Set the B TRIGGER COUPLING switch to LF REJ.

f. CHECK—No stable display.

g. Move the signal cable from the B External Trigger input to the A External Trigger input.

h. Set:

HORIZ DISPLAY	A
A TIME/DIV	5 ms
A TRIGGER COUPLING	AC
A TRIG MODE	NORM
A TRIGGER SOURCE	EXT
A TRIGGER LEVEL	As needed

i. CHECK—For a stable display, with both + and − slopes for these modes:

A TRIGGER COUPLING

AC, HF REJ, DC

j. Set the A TRIGGER COUPLING switch to LF REJ.

k. CHECK—No stable display.

18. Check A and B External Trigger Level Ranges

a. Set:

TRIGGER COUPLING (both)	AC
TRIGGER SLOPE (both)	+
CH 1 VOLTS/DIV	1 V
HORIZ/DISPLAY	A
A TRIG MODE	AUTO
A TIME/DIV	1 ms

b. Remove the 50 Ω termination and adjust the low-frequency generator for a 4-division (4 V) display at 1 kHz.

c. CHECK—Display is triggered along the positive slope of the waveform as the A TRIGGER LEVEL control is rotated.

d. CHECK—Display is not triggered (free runs) at either extreme of rotation.

e. Set the A TRIGGER SLOPE switch to −.

f. CHECK—Display is triggered along the negative slope of the waveform as the A TRIGGER LEVEL control is rotated.

g. CHECK—Display is not triggered (free runs) at either extreme of rotation.

h. Move the low-frequency generator signal from the A External Trigger input to the B External Trigger input.

i. Set:

A TRIGGER LEVEL	Fully counterclockwise
HORIZ DISPLAY	B DLY'D

j. CHECK—Display is triggered along the positive slope of the waveform as the B TRIGGER LEVEL control is rotated.

k. CHECK—Display is not triggered (not visible) at either extreme of rotation.

l. Set the B TRIGGER SLOPE switch to −.

http://manoman.sqhill.com

m. CHECK—Display is triggered along the negative slope of the waveform as the B TRIGGER LEVEL control is rotated.

n. CHECK—Display is not triggered (not visible) at either extreme of rotation.

o. Disconnect the test setup.

p. Set:

HORIZ DISPLAY	A
A TRIGGER SOURCE	EXT/10
CH 1 VOLTS/DIV	5 V
CH 1 VAR	Fully counterclockwise
A TRIGGER COUPLING	AC

q. Connect the calibration generator standard-amplitude output to the CH 1 input via a 50 Ω bnc cable and bnc T. Connect the bnc female connection to A External Trigger input via a 50 Ω bnc cable. Adjust the generator output to 50 volts.

NOTE

The range of the A LEVEL control with the A SOURCE switch in EXT/10 is ±20 volts (40 V peak-to-peak) or greater. The applied signal is 50 V peak-to-peak. Therefore, untriggered operation at both extremes of the A TRIGGER LEVEL control is not required.

r. CHECK—Display is triggered along the negative slope of the waveform as the A TRIGGER LEVEL control is rotated.

s. Set the A TRIGGER SLOPE switch to +.

t. CHECK—Display is triggered along the positive slope of the waveform as the A TRIGGER LEVEL control is rotated.

u. Disconnect the test setup.

19. Check Line Triggers

a. Set:

CH 1 VOLTS/DIV and VAR As required

A TRIGGER

MODE	AUTO
COUPLING	AC
SOURCE	LINE
SLOPE	+

b. Connect a 10X probe from the CH 1 input to a line-frequency source.

c. CHECK—For a stable display, starting on the positive-going slope.

d. Set the A TRIGGER SOURCE switch to −.

e. CHECK—For a stable display, starting on the negative-going slope.

f. Disconnect probe from the line-frequency source; then from the 465B.

20. Check NORM A Trigger Mode

a. Set:

A TIME/DIV	1 ms
CH 1 VOLTS/DIV	.5 V
CH 1 VAR	Calibrated detent

A TRIGGER

SLOPE	+
SOURCE	NORM
COUPLING	AC
MODE	AUTO

b. Connect time-mark generator to the CH 1 input via a 50 Ω bnc cable and 50 Ω bnc termination. Adjust generator for 0.1 s time markers.

http://manoman.sqhill.com

c. CHECK—Display can be triggered by adjusting the A TRIGGER LEVEL control.

d. Set the A TRIG MODE switch to NORM.

e. CHECK—Display is triggered.

f. Set the CH 1 AC-GND-DC switch to GND.

g. CHECK—No display is visible.

21. Check AUTO Recovery Time

a. Set:

CH 1 AC-GND-DC	DC
A TRIG MODE	AUTO

b. CHECK—Display is triggered.

c. Set the time-mark generator for 0.5 s time markers.

d. CHECK—Display cannot be triggered (free runs).

e. Disconnect the time-mark generator.

http://manoman.sqhill.com

NOTE

OSCILLOSCOPES WITH DIGITAL MULTIMETERS ATTACHED, REFER TO THE CALIBRATION SECTION OF THE DIGITAL MULTIMETER MANUAL AT THIS POINT. ON COMPLETION OF THE CALIBRATION SECTION IN THE DM MANUAL RETURN TO THIS MANUAL AND COMPLETE STEPS 18 & 19 IN THE HORIZONTAL SECTION, THEN CONTINUE ON TO THE NEXT SECTION.

FOR CALIBRATION OF OSCILLOSCOPES WITHOUT DIGITAL MULTIMETERS, CONTINUE TO HORIZONTAL SECTION OF THIS MANUAL.

HORIZONTAL

Equipment Required

1. Test Oscilloscope
2. Time-mark Generator
3. 50 Ω Bnc Cable
4. Leveled Sine-wave Generator
5. 50 Ω Bnc Termination
6. 3-Inch Slotted Screwdriver
7. Low-capacitance Slotted Screwdriver
8. Dual-input Coupler

See ADJUSTMENT LOCATIONS 1 *and* ADJUSTMENT LOCATIONS 5 *in the Diagrams section for adjustments and test points (TP).*

465B Control Settings

Power Controls

Regulating Range Selector	Medium
Line Voltage Selector	115 V
POWER	ON

CRT Controls

INTENSITY	As desired
FOCUS	Best focused display
SCALE ILLUM	As desired
B INTENSITY	As desired

Vertical Controls (both Channels if applicable)

VOLTS/DIV	0.5 V
VAR	Calibrated detent
POSITION	Midrange
AC-GND-DC	DC
VERT MODE	CH 1
INVERT	Off (button out)
20 MHz BW LIMIT	Full bandwidth (button out)

Triggering Controls (both A and B if applicable)

LEVEL	As needed for a stable display
SLOPE	+
COUPLING	AC
A SOURCE	EXT
B SOURCE	Starts after delay

Sweep Controls

HORIZ DISPLAY	ALT
DELAY TIME POSITION	1.00
A TIME/DIV	1 ms
B TIME/DIV	5 μs
VAR TIME/DIV	Calibrated detent
X10 MAG	Off (button out)
POSITION	Midrange
A TRIGGER HOLDOFF	NORM
TRACE SEP	As needed for ALT display trace separation.

http://manoman.sqhill.com

1. Check/Adjust Sweep Start and A Sweep Calibration (R4570, R6053)

a. Connect 1 ms time markers to the CH 1 input from the time-mark generator via a 50 Ω bnc cable and a 50 Ω termination. Connect + Trigger Out from the time-mark generator to the A External Trigger input via a 50 Ω bnc cable and a 50 Ω termination.

b. CHECK—Intensified portion of the sweep begins at the second time marker. (It may be necessary to readjust the INTENSITY and B INTENSITY controls, so that the intensified portion of the sweep is visible.)

c. ADJUST—Sweep Start (R4570) so the intensified portion of the sweep begins at the start of the second time marker and the pulse displayed on B DLY'D trace starts at the beginning of the sweep.

d. Set the DELAY TIME POSITION dial to 9.00.

e. CHECK—Intensified portion of the sweep begins at the tenth time marker.

f. ADJUST—A Sweep Cal (R6053) so the intensified portion of the sweep begins at the start of the tenth time marker and the pulse displayed on B DLY'D trace starts at the beginning of the sweep.

g. INTERACTION—Between Sweep Start and A Sweep Cal adjustments. Repeat both until no further improvement is noted.

2. Check Delay or Differential Time Linearity

a. Set the DELAY TIME POSITION dial to position the tenth time marker to the beginning of the sweep.

b. Note the reading on the DELAY TIME POSITION dial.

c. Adjust the DELAY TIME POSITION dial so the ninth time marker is at the beginning of the sweep.

d. CHECK—DELAY TIME POSITION dial for a difference in reading of: 1.00 ±0.01 (0.99 to 1.01), from +15° C to +35° C; 1.00 ±0.03 (0.99 to 1.03), from −15° C to −55° C, than the reading noted in part c.

NOTE

1 division of the DELAY TIME POSITION dial is one complete revolution of the inner knob. 0.01 division is one minor division of the inner knob.

e. Rotate the DELAY TIME POSITION dial to position each successive time marker to the beginning of the sweep.

f. CHECK—DELAY TIME POSITION dial for a difference in reading of: 1.00 ±0.01 (0.99 to 1.01) from +15° C to +35° C; 1.00 ±0.03 (0.99 to 1.03), from −15° C to +55° C, than the adjacent time marker.

3. Check/Adjust Horizontal Amplifier Gain (R4373, R4272)

a. Set:

HORIZ DISPLAY	A
TIME/DIV (both)	1 ms
DELAY TIME POSITION	Fully counterclockwise

b. Select 1 ms time markers from the time-mark generator.

c. CHECK—Display for 1 marker/division ±2% (±0.2 division at the eleventh time marker).

d. ADJUST—X1 Gain (R4274) for exactly 1 marker/division.

e. Select 0.1 ms time markers from the time-mark generator.

f. Press X10 MAG push button in.

g. CHECK—X10 MAG LED is on when the X10 MAG push button is in.

h. CHECK—1 marker/division ±3% (±1 1/2 minor divisions at the eleventh time marker).

i. ADJUST—X10 Gain (R4373) for exactly 1 time marker/division.

http://manoman.sqhill.com

4. Check Sweep Linearity

a. CHECK—Linearity over any 2 divisions of the magnified sweep to be within 0.1 division.

b. Release the X10 MAG push button.

c. Select 1 ms time markers from the time-mark generator.

d. CHECK—Linearity over any 2 divisions of the sweep to be within 0.1 division.

5. Check/Adjust R4253 Magnifier Centering (SN B011250—UP) and R4275 Registration

a. Push the X10 MAG push button in.

NOTE

Perform parts b through e for SN B011250—up. Below SN B011250, skip to part f.

b. Press BEAM FIND push button in.

c. CHECK—Display is centered horizontally.

d. ADJUST—Horizontal DC Centering (R4253) to horizontally center the display.

e. Release BEAM FIND push button.

f. Select 5 ms time markers from the time-mark generator.

g. Position the middle time marker to the center vertical graticule line.

h. Release the X10 MAG push button.

i. CHECK—Middle time marker is within 0.2 division of the center vertical graticule line.

j. ADJUST—Magnifier Registration (R4275) to position the middle time marker to the center vertical graticule line.

k. Repeat parts c through j (parts a and f through j for SN below B011250) until no horizontal shift is observed between X10 MAG in and X10 MAG out.

6. Check/Adjust B Sweep Calibration (R6052)

a. Set:

DELAY TIME POSITION	Fully counterclockwise
HORIZ DISPLAY	B DLY'D
A TIME/DIV	2 ms
B TIME/DIV	1 ms
X10 MAG	Off (button out)

b. Select 1 ms time markers from the time-mark generator.

c. CHECK—Display for 1 time marker/division ±2% (1 minor division at the eleventh time marker).

d. ADJUST—B Sweep Cal (R6052) for exactly 1 time marker/division.

7. Check A Sweep Length

a. Set:

TIME/DIV (both)	1 ms
HORIZ DISPLAY	A

b. Select 5 ms time markers.

c. Position the third time marker horizontally to the center vertical graticule line.

d. CHECK—Display extends to the right of the center vertical graticule line 1 division (±0.5 division).

8. Check Variable Time/Division

a. Set the A TIME/DIV switch to 2 ms.

b. Select 5 ms time markers from the time-mark generator.

c. CHECK—At least 1 time marker/division can be obtained by adjusting the VAR TIME/DIV control.

d. CHECK—UNCAL LED comes on when the VAR TIME/DIV control is out of the detent position.

e. Return the VAR TIME/DIV control to the detent position.

http://manoman.sqhill.com

9. Check Horizontal POSITION Range

a. Turn the Horizontal POSITION control fully clockwise.

b. CHECK—Start of sweep is to the right of the center vertical graticule line.

c. Turn the Horizontal POSITION control fully counterclockwise.

d. CHECK—End of sweep is to the left of the center vertical graticule line.

NOTE

Horizontal POSITION control is a combined Coarse and Fine position control mounted on the same shaft in a mechanical arrangement that allows the Fine position potentiometer to rotate approximately 1/4 turn (1/8 turn in either direction from midrange) before the Coarse position control potentiometer is engaged.

e. Rotate the horizontal POSITION control through its Fine range.

f. CHECK—Horizontal POSITION control Fine range will position the sweep approximately 0.5 divisions.

10. Check/Adjust A 10 μs Timing (C6002)

a. Set:

DELAY TIME POSITION	1.00
A TIME/DIV	10 μs
B TIME/DIV	1 μs

b. Select 10 μs time markers from the time-mark generator.

c. CHECK—Display for 1 time marker/division ±2% (1 minor division at the eleventh time marker).

d. ADJUST—10 μs timing (C6002), with a low capacitance screwdriver, for exactly 1 time marker/division.

e. Set the HORIZ DISPLAY switch to B DLY'D and B TRIGGER SOURCE to STARTS AFTER DELAY.

f. Horizontally position the displayed marker to align it with a vertial graticule line.

g. Set DELAY TIME POSITION to 9.00.

h. ADJUST—10 μs timing (C6002) with a low capacitance screwdriver, so the displayed marker is aligned with the same vertical graticule line as in part f.

i. Repeat parts f through h until no error exists between a DELAY TIME POSITION dial setting of 1.00 and 9.00.

11. Check/Adjust A Sweep High Speed Timing (C6015)

a. Set:

DELAY TIME POSITION	1.50
B TRIGGER SOURCE	STARTS AFTER DELAY
A TIME/DIV	0.5 μs
B TIME/DIV	0.05 μs
HORIZ DISPLAY	A

b. Select 0.5 μs time markers from the time-mark generator.

c. CHECK—Display for 1 time marker/dvision ±2% (1 minor division at the eleventh time marker).

d. ADJUST—A High Speed Timing (C6015), with the low-capactiance screwdriver, for exactly 1 time marker/division.

e. Switch the HORIZ DISPLAY switch to B DLY'D.

f. Use Horizontal POSITION control to position the displayed marker so it is aligned with the center vertical graticule line.

g. Set DELAY TIME POSITION to 8.50.

h. CHECK—Displayed time marker aligns with the center vertical graticule line.

i. ADJUST—A High Speed Timing (C6015), with a low-capacitance screwdriver, so the displayed marker is aligned with the center vertical graticule line.

http://manoman.sqhill.com

j. INTERACTION—Between the two positions of the DELAY TIME POSITION dial when adjusting C6015. Compromise the adjustments as necessary to achieve correct timing.

12. Check/Adjust B Sweep High Speed Timing (C6042)

a. Set:

DELAY TIME POSITION	Fully counterclockwise
HORIZ DISPLAY	B DLY'D
B TRIGGER SOURCE	NORM
A TIME/DIV	1 μs
B TIME/DIV	0.5 μs

b. Adjust the A and B TRIGGER LEVEL controls for a stable display.

c. CHECK—Display for 1 time marker/division ±2% (1 minor division at the eleventh time marker).

d. ADJUST—B High Speed Timing (C6042), with a low capacitance screwdriver, for exactly 1 time marker/division.

13. Check A and B Time/Division Accuracy

a. CHECK—Using the B TIME/DIV switch and the time-mark generator settings given in Table 4-15, check B sweep timing is within 0.2 division, over the first 10 divisions of the display.

Table 4-15

A AND B TIMING ACCURACY

A and B Time/Div Switch Setting	Time-mark Generator Output	CRT Display (Markers/ Division)
0.02 μs	20 ns	1
0.05 μs	50 ns	1
0.1 μs	0.1 μs	1
0.2 μs	0.2 μs	1
0.5 μs	0.5 μs	1
1 μs	1 μs	1
2 μs	2 μs	1
5 μs	5 μs	1
10 μs	10 μs	1
20 μs	20 μs	1
50 μs	50 μs	1
0.1 ms	0.1 ms	1
0.2 ms	0.2 ms	1
0.5 ms	0.5 ms	1
1 ms	1 ms	1
2 ms	2 ms	1
5 ms	5 ms	1
10 ms[a]	10 ms	1
20 ms[a]	20 ms	1
50 ms[a]	50 ms	1
A SWEEP ONLY		
0.1 s[a]	0.1 s	1
0.2 s[a]	0.1 s	1
0.5 s[a]	0.5 s	1

[a] **Switch A TRIG MODE to NORM below 5 ms/division.**

b. Set the HORIZ DISPLAY switch to A.

c. CHECK—Using the A TIME/DIV switch and the time-mark generator settings given in Table 4-15 check A sweep timing within 0.2 division, over the first 10 divisions of the display.

14. Adjust High-Speed Magnified Timing (C4246, C4247)

a. Set:

HORIZ DISPLAY	A
X10 MAG	X10 (button in)
Horizontal POSITION	Midrange (as required)
A and B TIME/DIV	0.05 μs

b. Select 5 ns time markers from the time-mark generator.

c. Set CH 1 VOLTS/DIV for at least a 4-division display.

d. CHECK—Display for 1 time marker/division ±3% (±1 1/2 minor divisions at the eleventh time marker).

http://manoman.sqhill.com

e. ADJUST—C4246 and C4247 equally for 1 time marker/division over the entire 10 divisions.

f. Set A and B TIME/DIV to 0.02 μs.

NOTE

For SN B011250—up, perform parts g through j. For SN below B011250 skip to part k.

g. Press BEAM FIND push button in.

h. CHECK—Display is centered horizontally.

i. ADJUST—Horizontal DC Centering R4253 to horizontally center the compressed display. (Recheck Magnifier Registration if this adjustment is made.)

j. Release BEAM FIND push button.

k. ADJUST—C4246 for 2 time marker/5 divisions over the entire 10 divisions (adjust Horizontal POSITION control as necessary).

l. Set A and B TIME/DIV switch to 0.05 μs.

m. ADJUST—C4247 for 1 time marker/division over the entire 10 divisions.

n. Repeat part f and parts k through m for best timing on 0.05 μs and 0.02 μs ranges until no further improvement is obtained.

15. Check A and B Magnified Timing Accuracy

a. CHECK—Using the A TIME/DIV switch settings and the time-mark generator settings given in Table 4-16 check A magnified sweep timing is within 0.3 division over the center 10 divisions of the magnified display. Note the portions of the total magnified sweep length to be excluded from the measurement.

b. Set the HORIZ DISPLAY switch to B DLY'D.

c. CHECK—Using the B TIME/DIV switch and the time-mark generator settings given in Table 4-16 check B magnified sweep timing, within 0.3 division over the center 10 divisions of the magnified display. Note the portions of the total magnified sweep length to be excluded from the measurement.

d. Release the X10 MAG push button.

Table 4-16

A AND B MAGNIFIED ACCURACY

A and B Time/Div Switch Setting	Time-mark Generator Output	CRT Display (Markers/Division)	Portions of Total Magnified Sweep Length to Exclude from Measurement
0.02 μs	2 ns	1	First and last 25 divisions
0.05 μs	5 ns	1	First and last 10 divisions
0.1 μs	10 ns	1	First and last 5 divisions
0.2 μs	20 ns	1	First and last 2.5 divisions
0.5 μs	50 ns	1	
1 μs	0.1 μs	1	
2 μs	0.2 μs	1	
5 μs	0.5 μs	1	
10 μs	1 μs	1	
20 μs	2 μs	1	
50 μs	5 μs	1	
0.1 ms	10 μs	1	
0.2 ms	20 μs	1	
0.5 ms	50 μs	1	
1 ms	0.1 ms	1	
2 ms	0.2 ms	1	
5 ms	0.5 ms	1	
10 ms[a]	1 ms	1	
20 ms[a]	2 ms	1	
50 ms[a]	5 ms	1	

A SWEEP ONLY

0.1 s[a]	10 ms	1	
0.2 s[a]	20 ms	1	
0.5 s[a]	50 ms	1	

[a] **Switch TRIG MODE to NORM below 5 ms/division.**

http://manoman.sqhill.com

16. Check Delay or Differential Time Accuracy

a. Set:

B TRIGGER SOURCE	STARTS AFTER DELAY
A TRIG MODE	AUTO
TIME/DIV (both)	According to Table 4-17
HORIZ DISPLAY	ALT

b. CHECK—Using the A TIME/DIV switch, B TIME/DIV switch, and the time-mark generator settings given in Table 4-17, check differential time accuracy is within the given tolerance. First set the DELAY TIME POSITION dial to 1.00 and rotate the dial slightly until the sweep starts at the top of the second time marker. Note the control setting and then set the dial to 9.00 and rotate it slightly until the sweep starts at the top of the tenth time marker. Delay TIME POSITION dial setting must be 8.00 divisions higher, ±0.08 division.

Table 4-17

DIFFERENTIAL TIME ACCURACY

A Time/ Div Switch Setting	B Time/ Div Switch Setting	Time-mark Generator Output	Allowable Error for Given Accuracy
0.1 μs	0.02 μs	0.1 μs	±8 minor dial divisions
0.2 μs	0.05 μs	0.2 μs	
0.5 μs	0.05 μs	0.5 μs	
1 μs	0.1 μs	1 μs	
2 μs	0.2 μs	2 μs	
5 μs	0.5 μs	5 μs	
10 μs	1 μs	10 μs	
20 μs	2 μs	20 μs	
50 μs	5 μs	50 μs	
0.1 ms	10 μs	0.1 ms	
0.2 ms	20 μs	0.2 ms	
0.5 ms	50 μs	0.5 ms	
1 ms	0.1 ms	1 ms	
2 ms	0.2 ms	2 ms	
5 ms	0.5 ms	5 ms	
10 ms[a]	1 ms	10 ms	
20 ms[a]	2 ms	20 ms	
50 ms[a]	5 ms	50 ms	
0.1 s[a]	10 ms	0.1 s	
0.2 s[a]	20 ms	0.2 s	
0.5 s[a]	50 ms	0.5 s	

[a] **Below 5 ms/division, set HORIZ DISPLAY to B DLY'D and A TRIG MODE to NORM.**

NOTE

Below 5 ms/division ALT HORIZ DISPLAY sweeps alternate too slowly to observe display with ease; therefore, set HORIZ DISPLAY TO B DLY'D. If in doubt as to the correct setting of the DELAY TIME POSITION dial, set the HORIZ DISPLAY switch to A INTEN and check which marker is intensified.

17. Check Delay or Differential Time Jitter

a. Set:

DELAY TIME POSITION	1.00
HORIZ DISPLAY	B DLY'D
A TIME/DIV	1 ms
B TIME/DIV	0.2 μs
A TRIG MODE	AUTO

b. Select 1 ms time markers from time-mark generator.

c. Position the time marker near the center of the display area with the DELAY TIME POSITION dial.

d. CHECK—Jitter on the leading edge of the time marker should not exceed 1 division (2.5 divisions if the instrument is being operated on a 50 Hz line voltage). Disregard the slow drift.

e. Turn the DELAY TIME POSITION dial to 9.00 and slightly readjust so the time marker is displayed near the center of the display area.

f. CHECK—Jitter on the leading edge of the time marker should not exceed 1 division (2.5 divisions if the instrument is being operated on a 50 Hz line voltage). Disregard the slow drift.

g. Disconnect test setup.

18. Check/Adjust X Gain (R4381)

a. Set:

TIME/DIV (both)	X-Y
VOLTS/DIV (both)	5 mV
CH 1 AC-GND-DC	AC
CH 2 AC-GND-DC	GND
HORIZ DISPLAY	A
A TRIGGER SOURCE	NORM

http://manoman.sqhill.com

NOTE

Setting a TIME/DIV switch to X-Y position disables all VERT MODE switches, and automatically selects CH 1 input for the X-Axis signal and CH 2 input for the Y-Axis signal.

b. Connect standard-amplitude signal from the calibration generator to the CH 1 input via a 50 Ω unterminated bnc cable. Set the generator output amplitude to 20 mV.

c. CHECK—Display for 4 divisions of horizontal deflection ±4% (4 divisions ±0.16 division).

d. Switch the CH 1 AC-GND-DC switch to DC.

e. CHECK—Display for 4 divisions of horizontal deflection ±4% (4 divisions ±0.16 division). It is normal for this check to be slightly less than that observed in part c.

f. Set the CH 1 AC-GND-DC switch to AC.

g. ADJUST—X Gain (R4381) for exactly 4 divisions of horizontal deflection.

h. Disconnect test setup.

19. Check X-Y Phasing and Bandwidth

a. Connect the output of the leveled sine-wave generator to the CH 1 and CH 2 inputs via a 50 Ω bnc cable, 50 Ω termination, and a dual-input coupler.

b. Adjust the leveled sine-wave generator for an 8-division horizontal display at 50 kHz.

c. Set the CH 2 AC-GND-DC switch to AC.

d. Center the display vertically and horizontally with the Horizontal POSITION and CH 2 POSITION controls.

e. CHECK—Display for an opening at the center horizontal graticule line of 0.4 division or less.

f. Set the CH 2 AC-GND-DC switch to GND.

g. Adjust the leveled sine-wave generator for a 10-division horizontal display at 50 kHz.

h. Increase the leveled sine-wave generator frequency until the display is reduced to 7 divisions.

i. CHECK—Output frequency of the leveled sine-wave generator is at least 4 MHz.

j. Disconnect the test setup.

20. Check B Ends A

a. Set:

HORIZ DISPLAY	A INTEN
A TIME/DIV	1 ms
B TIME/DIV	0.1 ms
A TRIGGER HOLDOFF	B ENDS A (in detent)

b. Adjust the INTENSITY control so the A sweep portion of the display is visible.

c. Rotate the DELAY TIME POSITION dial through its range.

d. CHECK—A sweep ends after the intensified portion at all settings of the DELAY TIME POSITION dial.

21. Check A Trigger Holdoff

a. Set:

HORIZ DISPLAY	A
A TRIGGER HOLDOFF	NORM
A TRIGGER LEVEL	Fully clockwise

b. Connect the A +GATE output signal (from 465B rear panel) to the test oscilloscope via a 50 Ω unterminated bnc cable.

c. Set the test oscilloscope TIME/DIV switch and VAR TIME/DIV control so that the bottom portion of the waveform (holdoff time of the A +GATE) is exactly 1 division in length.

http://manoman.sqhill.com

d. Rotate the A TRIGGER HOLDOFF control clockwise.

e. CHECK—At least 10 times increase in the holdoff time of the A +GATE.

f. Set the A TRIGGER HOLDOFF control to NORM.

g. Disconnect test equipment.

http://manoman.sqhill.com

GATES, CALIBRATOR, AND EXT Z AXIS

Equipment Required

1. Test Oscilloscope
2. 42-inch, 50 Ω Bnc Cable (2 required)
3. Digital Voltmeter
4. Shorting Strap
5. Calibration Generator
6. Bnc T Connector
7. 3-inch Slotted Screwdriver

See ADJUSTMENT LOCATIONS 1 *in the Diagrams section for adjustments and test points (TP).*

465B Control Settings

Power Controls

Regulating Range Selector	Medium
Line Voltage Selector	115 V
POWER	ON

CRT Controls

INTENSITY	As desired
FOCUS	Best focused display
SCALE ILLUM	As desired
B INTENSITY	As desired

Vertical Controls (both Channels if applicable)

VOLTS/DIV	5 mV
VAR	Calibrated detent
POSITION	Midrange
VERT MODE	CH 1
INVERT	Off (button out)
20 MHz BW LIMIT	Full bandwidth (button out)

Triggering Controls (both A and B if applicable)

LEVEL	Fully clockwise
SLOPE	+
COUPLING	AC
A SOURCE	NORM
B SOURCE	STARTS AFTER DELAY
A TRIG MODE	AUTO

Sweep Controls

HORIZ DISPLAY	B DLY'D
DELAY TIME POSITION	Fully counterclockwise
A TIME/DIV	50 μs
B TIME/DIV	50 μs
VAR TIME/DIV	Calibrated detent
X10 MAG	Off (button out)
POSITION	Midrange
A TRIGGER HOLDOFF	NORM

1. Check A and B +Gates

a. Connect the B +GATE output (from the rear panel of the 465B) to the test oscilloscope via a 50 Ω unterminated bnc cable.

b. CHECK—Test oscilloscope display for a positive-going pulse of +5.5 V in amplitude (within 0.5 V).

c. Disconnect the cable from the B +GATE output and connect it to the A + GATE output.

d. CHECK—Test oscilloscope display for a positive-going pulse of +5.5 V in amplitude (±0.5 V).

e. Disconnect test equipment.

2. Check/Adjust Calibrator DC Level (R4293)

a. Connect a shorting strap between TP4177 and TP4178.

b. Connect digital voltmeter common lead to chassis ground and + lead to the CALIBRATOR current loop.

http://manoman.sqhill.com

c. CHECK—CALIBRATOR dc level is 300 mV ±1% (297 to 303 mV at 0° C to +40° C).

d. ADJUST—Amplitude Cal (R4293) for exactly 300 mV.

e. Remove the shorting strap and the digital voltmeter connections.

f. Connect a 10X probe from the test oscilloscope to the CALIBRATOR current loop.

g. CHECK—Test oscilloscope display for a 0.3 V square wave with a duration of about 1 ms.

h. Disconnect the test setup.

3. Check External Z Axis

a. Set:

HORIZ DISPLAY	A
A TIME/DIV	0.2 ms
A TRIGGER SOURCE	EXT

b. Set the INTENSITY control for a normal viewing level.

c. Connect the calibration generator standard-amplitude signal to the A External Trigger input via a 50 Ω bnc cable and bnc T connector. Connect from the bnc T to the EXT Z-AXIS input (465B rear panel) via a 50 Ω bnc cable. Set the generator output for 5 V.

d. Adjust A TRIGGER LEVEL for a stable display (TRIG LED on).

e. CHECK—Display for noticeable intensity modulation.

f. Disconnect the test setup.

http://manoman.sqhill.com

MAINTENANCE

INTRODUCTION

This section of the manual contains information for use in preventive maintenance, troubleshooting and corrective maintenance. Procedures for removal and replacement of the standard instrument cabinet and the rack adapter are presented at the beginning of the section. Should the instrument require shipment to a Tektronix Service Center for repair, refer to the repackaging instructions at the end of this section.

CABINET AND RACK ADAPTER REMOVAL AND REPLACEMENT

The standard cabinet protects the interior of this instrument from accumulation of dust and also provides protection to personnel from the operating potentials present. In addition, the cabinet reduces the emi (electromagnetic interference) radiation from the instrument and interference to the display due to other equipment.

The front panel cover provides a dust-tight seal around the front panel and protects the front panel when storing or transporting the instrument.

The Rack Adapter cabinet for the 465B provides the proper electrical environment for the instrument, reduces dust accumulation, minimizes handling damage, and provides a means for mounting the instrument solidly to a surface such as a rack or console.

Standard Cabinet Removal

The standard instrument cabinet can be removed in the following manner:

1. Disconnect the instrument power cord from the power source.

2. Install the front panel cover and set the instrument face on a flat surface.

3. Unwrap the power cord from the instrument feet.

4. Remove the six screws indicated in Figure 5-1 and remove the rear cabinet frame (with feet and screws) from the instrument as an intact assembly.

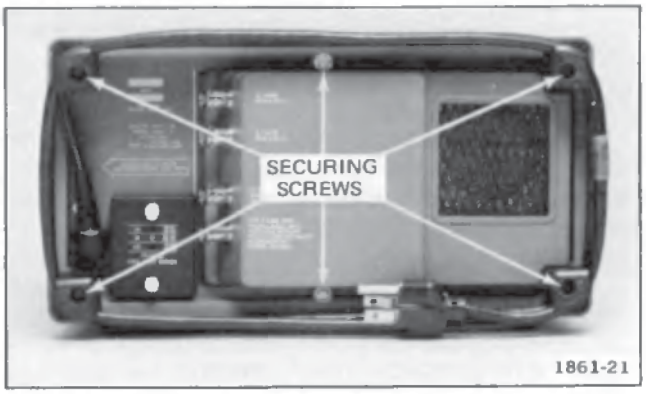

Figure 5-1. Removing the wrap-around cabinet.

5. Lift the cabinet up until it is separated from the instrument and power cord.

WARNING

Dangerous potentials exist at several points throughout this instrument. When the instrument is operated with the cabinet removed, do not touch exposed connections or components. Some transistors may have elevated cases. Dsiconnect power before cleaning the instrument or replacing parts.

Standard Cabinet Installation

The standard instrument cabinet should be installed in the following manner:

1. Disconnect the instrument power cord from the power source.

2. If parts were removed or replaced, check all sections of the instrument for proper assembly. It may be helpful to use the diagrams in Section 9, Replaceable Mechanical Parts List, for the location of parts.

3. 465B DM-series only—If the DM-series main circuit-board is not in place, install the board on the main chassis.

4. Install the front panel cover and set the instrument face on a flat surface.

http://manoman.sqhill.com

5. Place the cabinet handle against the bottom of the cabinet (bottom of cabinet is nearest to the carrying handle pivot points).

6. Pull the power cable through the cabinet and carefully slide the cabinet over the instrument. Avoid pinching cables or damaging components that protrude from circuit boards.

7. Using both hands, press lightly on the top and bottom sides of the cabinet until the front edge of the cabinet is inserted into the braided gasket groove around the full periphery of the front cabinet frame.

8. Pull the power cord through the rear cabinet frame, align the cutout portion in the frame for proper fit at the regulating range selector cover, and work the frame into place.

9. Set the feet and screws in place and with one hand exert a light downward pressure on the rear cabinet frame. Press lightly on the top and bottom sides of cabinet with the other hand, checking that cabinet edge is properly seated in the gasket groove of both front and rear frames. Continue to exert a downward pressure and tighten the six screws of the rear frame to a snug fit. Do not over-tighten these screws.

Rack Adapter Removal

The Rack Adapter can be removed from the instrument in the following manner:

1. Remove the hardware that fastens the Rack Adapter to the rack and pull the adapter partially out. Disconnect the instrument power cord from the power source and remove any interconnecting cables.

NOTE

It if is desired to tilt the Rack Adapter and instrument, remove a screw from the rear of each slide section mounted to the Rack Adapter. These securing screws are an important part of the mounting and should be installed when tilt operation is not necessary.

2. Remove the Rack Adapter, with instrument, from the rack and set the bottom of the complete assembly on a flat surface.

3. Remove two setscrews from the top front of Rack Adapter chassis, (0.125-inch Allen wrench is required to remove the setscrews). It may be helpful to use the diagrams in Section 9, Replaceable Mechanical Parts List, for the locations of parts.

4. Remove 10 screws that secure the rear support plate to an angle bracket on one side, to the Rack Adapter chassis on the opposite side, and to the rear of the instrument. Remove the rear support plate and blue plastic rear frame.

5. Slide the instrument forward through the adapter cabinet, using both hands (on front and rear) to lift and guide the instrument until separated from the Rack Adapter.

WARNING

Dangerous potentials exist at several points throughout this instrument. When the instrument is operated with the Rack Adapter removed, do not touch exposed connections or components. Some transistors may have elevated cases. Disconnect power before cleaning the instrument or replacing parts.

Rack Adapter Installation

The Rack Adapter should be installed in the following manner:

1. Disconnect the instrument power cord from the power source.

2. Verify proper assembly of all sections of the instrument if parts were removed or replaced. It may be helpful to use the diagrams in Section 9, Replaceable Mechanical Parts List, for the locations of parts.

3. Set the bottom of the Rack Adapter on a flat surface, pull the power cord through the cabinet portion of the Rack Adapter, and carefully slide the instrument rearward using both hands (on front and rear) to lift and guide the instrument until fully inserted. Avoid pinching cables or damaging components that protrude from circuit boards.

4. Check that the front edge of the cabinet portion of the Rack Adapter is inserted into the braided gasket groove around the full periphery of the instrument front frame. Pull the power cord through the blue plastic rear frame. Align the cutout portion in the plastic frame for proper fit at the regulating-range selector cover and work the frame into place.

http://manoman.sqhill.com

5. Apply the rear support bracket to the rear of the Rack Adapter. Install, without tightening, six screws that secure the rear support bracket through the blue plastic frame to the rear of the instrument and four screws that secure the rear support bracket to an angle bracket and to the Rack Adapter chassis.

6. Check that all parts of the complete assembly are properly seated, then tighten the screws at the rear of the instrument and the screws at the adapter chassis to a snug fit. Do not overtighten these screws.

7. Install two setscrews at the top front of the Rack Adapter chassis (0.125-inch Allen wrench is required to install the setscrews).

8. Mount the Rack Adapter slide sections to the rack slide assemblies, connect the power cord, connect any interconnecting cables, push the Rack Adapter into final operating position, and install the adapter-to-rack hardware.

PREVENTIVE MAINTENANCE

Introduction

Preventive maintenance consists primarily of cleaning and visual inspection. When performed on a regular basis, preventive maintenance can prevent instrument breakdown and ensure the reliability of this instrument. The severity of the environment to which the 465B is subjected will determine the frequency of maintenance. A convenient time to perform preventive maintenance is just prior to recalibration of the instrument.

Cleaning

The cabinet minimizes accumulation of dust inside the instrument. Operation without the cabinet in place necessitates more frequent cleaning. The front cover provides a measure of dust protection for the front panel and the crt face. The front cover should be installed when storing or transporting the instrument.

INTERIOR. Accumulation of dust and dirt should be removed as often as operating conditions require. Dirt can cause overheating and component breakdown. Dirt on components acts as an insulating blanket, preventing efficient heat dissipation. It also provides an electrical conduction path that can result in instrument failure, especially under high humidity conditions. The best way to clean the interior is to blow off the accumulated dust with dry, low-pressure air (approximately 9 pounds per square inch). Remove any remaining dirt with a soft brush or a cloth dampened with a mild detergent and water solution. A cotton-tipped applicator is useful for cleaning in narrow spaces or for cleaning ceramic terminal strips and circuit boards.

CAUTION

Avoid the use of chemical cleaning agents that might damage the plastics used in this instrument. Do not use chemicals that contain acetone, benzene, toluene, xylene, petroleum ether, white kerosene, carbon tetrachloride, methylene chloride, trichloroethane, trichlorotrifluoroethane (Freon 113, -tf, -ta, -te, -tmc) and trichlorethylene. Recommended cleaning agents are isopropyl alcohol, kelite (1 part kelite, 20 parts water), and a solution of 1% mild detergent and 99% water.

Most spray circuit coolants contain Freon 12 as a propellant. Because many Freons adversely affect switch contacts, check the contents and brand name before using a spray coolant. The following brand names are acceptable coolants: Artic Freeze, Quik-Freeze, and Can-O-Gas. Do not use Zero Mist brand of circuit coolant. The only recommended circuit coolants for the volts/division attenuators are dry ice (CO_2) or isopropyl alcohol.

SWITCH CONTACTS. Most of the switches in the 465B are circuit-board mounted, cam-actuated contacts. Care must be exercised to preserve the high-frequency characteristics of these switches. Switch maintenance is seldom necessary, but if it is required, observe the following precautions.

Clean the switch contacts only with isopropyl alcohol, especially in the area of the vertical attenuator boards. Carbon-based solvents will damage the boards used for the attenuators. Apply the isopropyl alcohol with a camel hair brush. Do not use cotton swabs, as they tend to snag on contacts, possibly causing damage, and the contacts may hold strands of cotton, causing intermittent electrical contact.

EXTERIOR. Loose dust accumulated on the outside of the oscilloscope can be removed with a soft cloth or small paint brush. The paint brush is particularly useful for dislodging dirt on and around the front-panel controls. Dirt that remains can be removed with a soft cloth dampened in a mild solution of detergent and water. Abrasive cleaners should not be used.

CRT. Two plastic light filters, one blue and one clear, are provided with the oscilloscope. Clean the light filter and the crt face with a soft lint-free cloth dampened with

http://manoman.sghill.com

denatured alcohol or a mild detergent and water solution. The optional crt mesh filter can be cleaned in the following manner:

1. Hold the filter in a vertical position and brush lightly with a Number 7 soft watercolor brush to remove light coatings of dust and lint.

2. Greasy residues or dried-on dirt can be removed with a solution of warm water and a neutral pH liquid detergent. Use the brush to lightly scrub the filter.

3. Rinse the filter thoroughly in clean water and allow to air dry.

4. If any lint or dirt remains, use clean low-pressure air (approximately 9 pounds per square inch) to remove it. Do not use tweezers or other hard cleaning tools on the filter, as the special finish may be damaged.

5. When not in use, store the mesh filter in a lint-free dust-proof container such as a plastic bag.

AIR FILTER. The air filter should be visually checked every few weeks and cleaned or replaced if dirty. More frequent inspections are required under severe operating conditions. The following procedure is suggested for cleaning the filter. If the filter is to be replaced, order new air filters from your local Tektronix Field Office or representative. Refer to the Replaceable Mechanical Parts List for ordering information.

1. Remove the filter by pulling it out of the retaining frame on the rear panel. Be careful not to drop any of the accumulated dirt into the instrument.

2. Flush the loose dirt from the filter with a stream of hot water.

3. Place the filter in a solution of mild detergent and hot water and let it soak for several minutes.

4. Squeeze the filter to wash out any remaining dirt.

5. Rinse the filter in clear water and allow it to dry.

6. Coat the dry filter with an air-filter adhesive (available from an air conditioner supplier, or see Maintenance Aids information at the end of this section).

7. Let the adhesive dry thoroughly.

8. Re-install the filter in the retaining frame.

Visual Inspection

The instrument should be inspected occasionally for such defects as broken connections, broken or damaged ceramic strips, improperly seated semiconductors, damaged or improperly installed circuit boards, and heat-damaged parts.

The corrective procedure for most visible defects is obvious; however, particular care must be taken if heat-damaged components are found. Overheating usually indicates other trouble in the instrument; therefore, it is important that the cause of overheating be corrected to prevent recurrence of the damage.

Lubrication

The fan motor and most of the potentiometers used in the 465B are permanently sealed and generally do not require periodic lubrication. The switches used in the 465B, both cam- and lever-type, are installed with proper lubrication applied where necessary and will rarely require any additional lubrication. A regular periodic lubrication program for the 465B is not recommended.

Semiconductor Checks

Periodic checks of the transistors and other semiconductors in the oscilloscope are not recommended. The best check of semiconductor performance is actual operation in the instrument.

Readjustment

To ensure accurate measurements, check the adjustment of this instrument after each 1000 hours of operation or, if used infrequently, every six months. In addition, replacement of components may necessitate readjustment of the affected circuits. The adjustment procedure can also be helpful in localizing certain troubles in the instrument. In some cases, minor troubles may be revealed and/or corrected by readjustment. Complete adjustment instructions are given in the Calibration Procedure section. If only a partial adjustment is performed, see the interaction chart, Table 4-6, for possible interactions with circuits not adjusted.

http://manoman.sqhill.com

TROUBLESHOOTING

Introduction

The following information is provided to facilitate troubleshooting. Information contained in other sections of this manual should be used along with the following information to aid in locating the defective component. An understanding of the circuit operation is helpful in locating troubles, particularly where integrated circuits are used. See the Theory of Operation, Section 3, for this information.

Troubleshooting Aids

TROUBLESHOOTING CHARTS. As an aid in locating problem areas, troubleshooting charts have been provided for the low-voltage power supplies, the −2450-volt power supply, and for a no-visible-display condition. These can be found on foldout pages in the Diagrams section.

POWER DISTRIBUTION DIAGRAM. As an aid in troubleshooting the power supplies, a power distribution diagram is provided on Diagram 14 in the foldout pages at the rear of this manual. The diagram shows the distribution for each voltage from the low-voltage power supply. It also shows the service jumpers that can be used to aid in isolating the power supply from the various circuit boards. Excessive loading on the low-voltage power supply by a circuit board can rapidly be traced to the faulty circuit board with the aid of the service jumpers. The service jumpers associated with a specific schematic diagram are indicated on the respective schematic diagram. The power distribution diagram should be used in conjunction with the power supply isolation procedures adjacent to troubleshooting diagrams located in the Diagrams section of this manual.

GRID COORDINATE SYSTEM. Each schematic diagram and circuit board illustration is sectioned by a grid system. A table listing the grid coordinates of each component shown is located adjacent to the schematic diagram. The table lists the grid location of components on both the schematic diagram and on the circuit board illustration to aid in cross referencing components between the schematic diagram and the circuit board illustration.

DIAGRAMS. Complete circuit diagrams are given on foldout pages in the Diagrams section. The portions of the circuit mounted on circuit boards are enclosed within black lines. The component number and electrical value of each component in this instrument are shown on the diagrams (see the first page of the Diagrams section for definition of the reference designators used to identify components in this instrument). Important voltages and waveforms are also shown on the diagrams. The physical locations of the waveform test points are shown on the Circuit Board illustrations.

CIRCUIT BOARD ILLUSTRATIONS. In conjunction with each circuit diagram is a circuit board illustration. These can be found on the back of a pullout page preceding the circuit diagram to which it relates. Each circuit component shown on the circuit diagram is identified on the circuit board illustration by its component number. In general, the component numbers increase from the left side of the circuit board to the right side, and from the top to the bottom. The lowest component numbers will be at the top left corner, and the highest component numbers will be at the bottom right corner of the circuit board.

ADJUSTMENT LOCATIONS ILLUSTRATIONS. To aid in locating test points and adjustable components, the adjustment locations pullout pages (normally used with the adjustment procedure) permit rapid location of test points and adjustments, because only these components are identified.

READ-ONLY MEMORY U1605 LOGIC TABLE. Refer to the Vertical Switching Logic diagram located in the Diagrams section of this manual for the following discussion. Input signals to U1605, a read-only memory (ROM), are as follows:

Input lines A_0 through A_2 — Logic levels from the Q_0, Q_1, and Q_2 outputs of U1705 used to indicate the present state of the switching. (Q_0, Q_1, and Q_2 outputs are active when LO.)

Input lines A_3 through A_6 — Logic levels selected by the VERT MODE switches (CH 1, CH 2, ADD, and A TRIG VIEW). A HI logic level present indicates that the Vertical Mode is selected.

Input line A_7 — Logic level controlled by the X-Y position of the A TIME/DIV switch. A LO logic level is present when X-Y Horizontal Display is selected.

After U1705 is clocked, ROM U1605 uses the present data on its input lines (A_0 through A_7) to select the next output switching state to be presented to U1705. There are four output lines from U1605, O_1 through O_4. Output lines O_1 through O_3 carry the future data; the signal present on output line O_4 is the Chop Clock Oscillator enabling logic (HI enables).

http://manoman.sqhill.com

In the partial table shown in Figure 5-2, no Vertical Modes are selected, and the present data from U1705 is an undefined column, (i.e., $\overline{000}$ is not a Vertical Mode selection). In the example given, the Chop Clock Oscillator will be enabled, and the next clock pulse to U1705 will switch U1705 output to 111. Table 5-1 shows that column 111 is the idle state of U1605 (the state switched to when no Vertical Modes are selected). In the Idle column, the future state of U1705 will remain 111, and the Chop Clock Oscillator will not be enabled. Each row across the table indicates the possible future states of U1705, while the column headings indicate the possible present state. The order of priority in switching (when multiple Vertical Modes are selected) is CH 1, CH 2, ADD, then A TRIG VIEW.

To use the table, determine the Vertical Mode(s) selected. Follow that row across the table. If the output of U1705 is at the present state indicated by a column heading, the data given in that column is the future state of U1705.

Example 1. Assume CH 1 and CH 2 Vertical Modes are selected. The present data from the Vertical Mode Switch is 10011. Move across that row to the 000 column. The data given indicates that if the present state of U1705 is 000, the future state will be 110 (CH 1) and that the Chop Clock Oscillator will be enabled. Following across the row, each column, except 110 (CH 1), gives the same future state. If the present state is CH 1, the future state will be 101 (CH 2). From there, it will switch back to CH 1 for the chopped display of the Channel 1 and Channel 2 input signals.

Example 2. Assume that X-Y Horizontal Display is selected. Go to any Vertical Mode selection in the bottom half of the table. All the columns indicate that regardless of the state of the U1705 output, the future state will be 101 (CH 2). When the output of U1705 goes to 101, the Chop Clock Oscillator will be turned off, and the Chop Clock to U1705 will cease.

Example 3. Assume ADD Vertical Mode is selected. In the Present Data from the Vertical Mode Switch column read 10100. Move across the row (adjacent to the data) to the 000 column and note that the future state of U1605 is 1100. The output state required to switch to the ADD display is 100. Trigger view is not selected, and both CH 1 and CH 2 are selected (LO logic level selects). The Chop Clock Oscillator will be enabled to clock U1705. After clocking, the Q_0 and Q_1 outputs (pins 3 and 6) of U1705 will be HI to gate U1805D and turn on transistor Q1636. This transistor supplies the extra current required to keep both CH 1 and CH 2 Diode Gates forward biased. In the case of the 000 state, it indicates that CH 1, CH 2, and A TRIG VIEW are selected for viewing together. While this output state exists, the Diode Gates will not be forward biased to allow this combination of signals to be displayed during the switching. If the ALT Vertical Mode is selected, the circuitry of the Vertical Mode Switch enables the Chop Clock Oscillator momentarily to switch U1605 to the selected state without waiting for the next Vert Alt Sync pulse from the Horizontal Display Logic circuit.

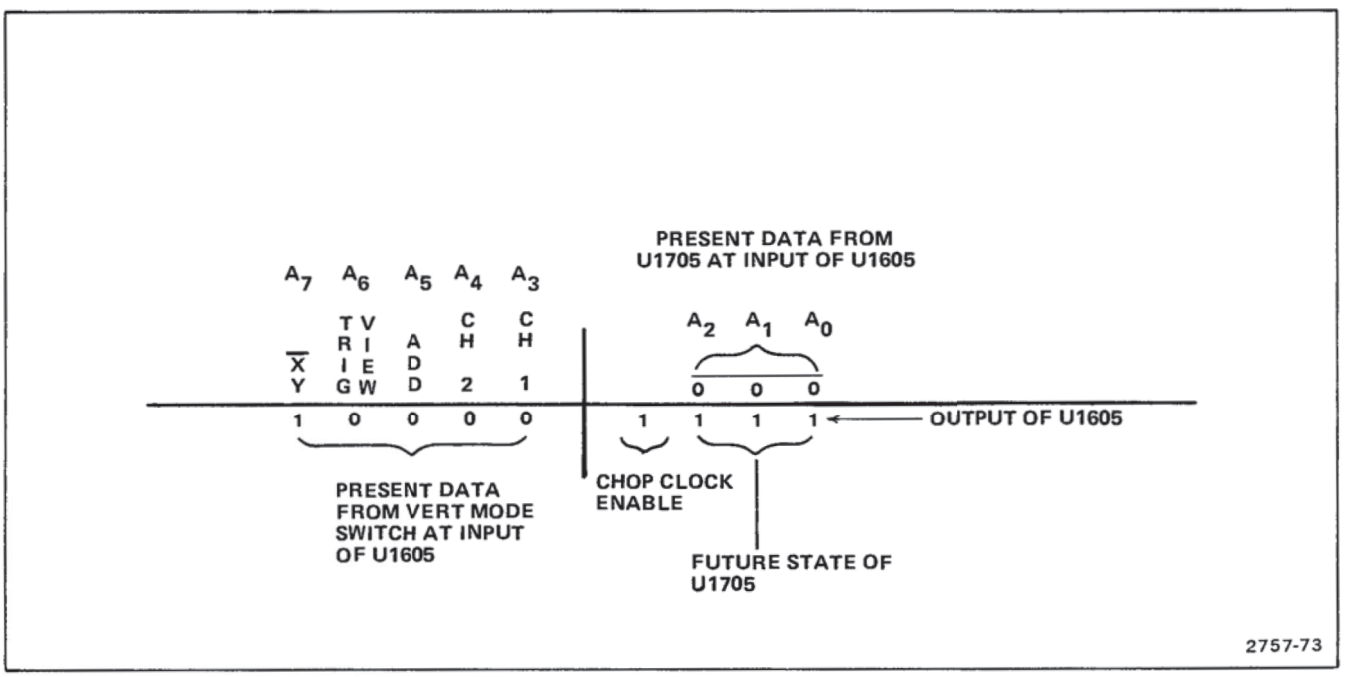

Figure 5-2. Partial Table 5-1.

http://manoman.sqhill.com

Table 5-1

READ-ONLY MEMORY U1605 LOGIC

VERT MODE PRESENT DATA AT U1605					UNDEFINED			TRIG VIEW	ADD	CH 2	CH 1	IDLE
X Y	TRIG VIEW	ADD	CH 1	CH 2	$\overline{000}$	$\overline{001}$	$\overline{010}$	$\overline{011}$	$\overline{100}$	$\overline{101}$	$\overline{110}$	$\overline{111}$
1	0	0	0	0	1111	1111	1111	1111	1111	1111	1111	0111
1	0	0	0	1	1110	1110	1110	1110	1110	1110	0110	1110
1	0	0	1	0	1101	1101	1101	1101	1101	0101	1101	1101
1	0	0	1	1	1110	1110	1110	1110	1110	1110	1101	1110
1	0	1	0	0	1100	1100	1100	1100	0100	1100	1100	1100
1	0	1	0	1	1110	1110	1110	1110	1110	1110	1100	1110
1	0	1	1	0	1101	1101	1101	1101	1101	1100	1101	1101
1	0	1	1	1	1110	1110	1110	1110	1110	1100	1101	1110
1	1	0	0	0	1011	1011	1011	0011	1011	1011	1011	1011
1	1	0	0	1	1110	1110	1110	1110	1110	1110	1011	1110
1	1	0	1	0	1101	1101	1101	1101	1101	1011	1101	1101
1	1	0	1	1	1110	1110	1110	1110	1110	1011	1101	1110
1	1	1	0	0	1100	1100	1100	1100	1011	1100	1100	1100
1	1	1	0	1	1110	1110	1110	1110	1011	1110	1100	1110
1	1	1	1	0	1101	1101	1101	1101	1011	1100	1101	1101
1	1	1	1	1	1110	1110	1110	1110	1011	1100	1101	1110
0	0	0	0	0	1101	1101	1101	1101	1101	0101	1101	1101
0	0	0	0	1	1101	1101	1101	1101	1101	0101	1101	1101
0	0	0	1	0	1101	1101	1101	1101	1101	0101	1101	1101
0	0	0	1	1	1101	1101	1101	1101	1101	0101	1101	1101
0	0	1	0	0	1101	1101	1101	1101	1101	0101	1101	1101
0	0	1	0	1	1101	1101	1101	1101	1101	0101	1101	1101
0	0	1	1	0	1101	1101	1101	1101	1101	0101	1101	1101
0	0	1	1	1	1101	1101	1101	1101	1101	0101	1101	1101
0	1	0	0	0	1101	1101	1101	1101	1101	0101	1101	1101
0	1	0	0	1	1101	1101	1101	1101	1101	0101	1101	1101
0	1	0	1	0	1101	1101	1101	1101	1101	0101	1101	1101
0	1	0	1	1	1101	1101	1101	1101	1101	0101	1101	1101
0	1	1	0	0	1101	1101	1101	1101	1101	0101	1101	1101
0	1	1	0	1	1101	1101	1101	1101	1101	0101	1101	1101
0	1	1	1	0	1101	1101	1101	1101	1101	0101	1101	1101
0	1	1	1	1	1101	1101	1101	1101	1101	0101	1101	1101

RESISTOR COLOR CODE. In addition to the brown composition resistors, some metal-film resistors and some wire-wound resistors are used in the 465B. The resistance values of wire-wound resistors are usually printed on the body of the component. The resistance values of composition resistors and metal-film resistors are color coded on the components with EIA color code (some metal-film resistors may have the value printed on the body). The color code is read starting with the stripe nearest the end of the resistor. Composition resistors have four stripes which consist of two significant figures, a multiplier, and a tolerance value (see Figure 5-3). Metal-film resistors have five stripes consisting of three significant figures, a multiplier, and a tolerance value.

CAPACITOR MARKINGS. The capacitance values of common disc capacitors and small electrolytics are marked on the side of the component body. The white ceramic capacitors used in the 465B are color coded in picofarads, using a modified EIA code (see Figure 5-3).

http://manoman.sqhill.com

COLOR CODE

1881-20 A

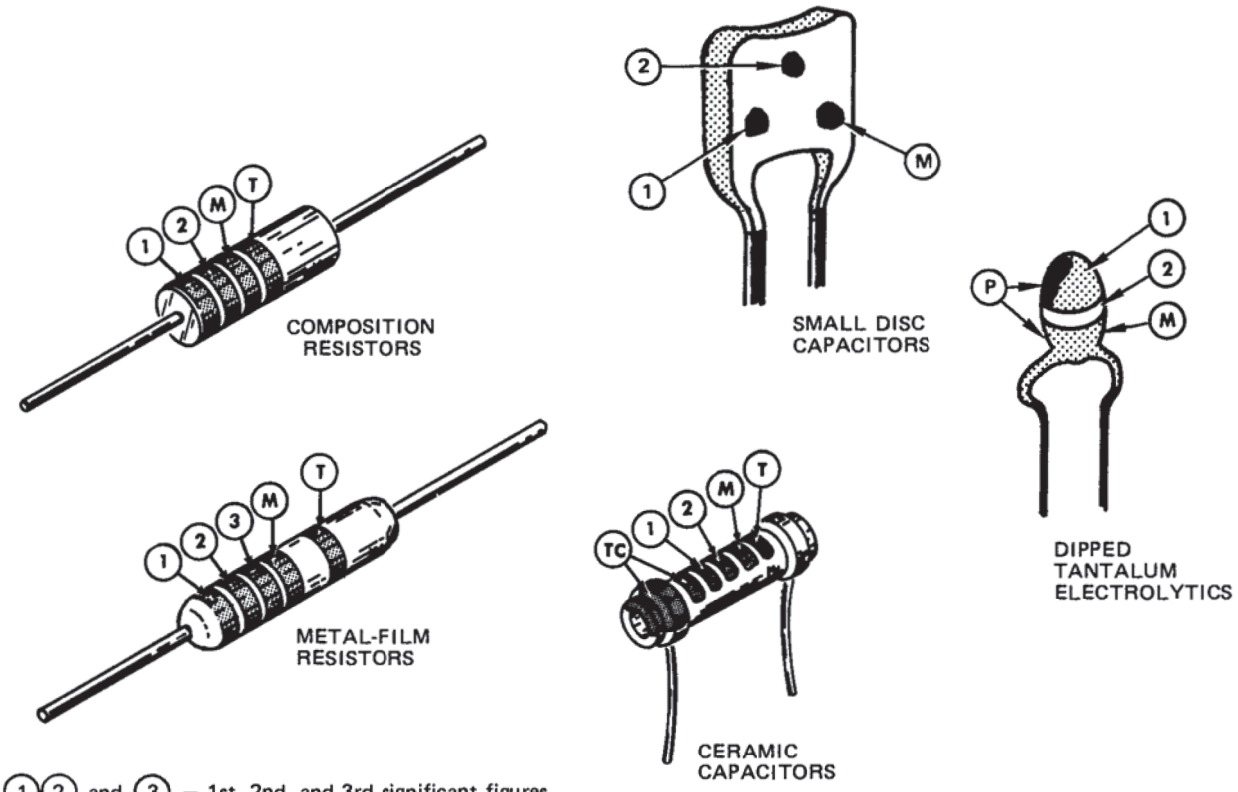

(1) (2) and (3) — 1st, 2nd, and 3rd significant figures

(M) —multiplier (T) —tolerance

(TC) —temperature coefficient

(P) —polarity and voltage rating

(T) and/or (TC) color code may not be present on some cepacitors

COLOR	SIGNIFICANT FIGURES	RESISTORS		CAPACITORS			DIPPED TANTALUM VOLTAGE RATING
		MULTIPLIER	TOLERANCE	MULTIPLIER	TOLERANCE		
					over 10 pF	under 10 pF	
BLACK	0	1	---	1	±20%	±2 pF	4 VDC
BROWN	1	10	±1%	10	±1%	±0.1 pF	6 VDC
RED	2	10^2 or 100	±2%	10^2 or 100	±2%	---	10 VDC
ORANGE	3	10^3 or 1 K	±3%	10^3 or 1000	±3%	---	15 VDC
YELLOW	4	10^4 or 10 K	±4%	10^4 or 10,000	+100% −9%	---	20 VDC
GREEN	5	10^5 or 100 K	±½%	10^5 or 100,000	±5%	±0.5 pF	25 VDC
BLUE	6	10^6 or 1 M	±¼%	10^6 or 1,000,000	---	---	35 VDC
VIOLET	7	---	±1/10%	---	---	---	50 VDC
GRAY	8	---	---	10^{-2} or 0.01	+80% −20%	±0.25 pF	---
WHITE	9	---	---	10^{-1} or 0.1	±10%	±1 pF	3 VDC
GOLD	–	10^{-1} or 0.1	±5%	---	---	---	---
SILVER	–	10^{-2} or 0.01	±10%	---	---	---	---
NONE	–	---	±20%	---	±10%	±1 pF	---

Figure 5-3. Color codes.

http://manoman.sqhill.com

The dipped tantalum capacitors used in the 465B are color coded in microfarads (see Figure 5-3). The color dot indicates the positive lead and voltage rating. Be careful to observe the polarity and voltage rating, as capacitors are easily destroyed by reverse or over voltage.

DIODE COLOR CODE. The cathode end of each glass-encased diode is indicated by a stripe, a series of stripes, or a dot. For most silicone or germanium diodes with a series of stripes, the color code identifies the three significant digits of the Tektronix Part Number using the resistor color-code system (e.g., a diode color-coded pink or blue-, brown - gray - green indicates Tektronix Part Number 152-0185-00). The cathode and anode ends of metal-encased diodes can be identified by the diode symbol marked on the body.

SEMICONDUCTOR LEAD CONFIGURATIONS. Typical semiconductor lead configurations are shown at the beginning of the diagrams section.

Troubleshooting Equipment

Refer to Table 5-2 in Maintenance Aid information at the end of this section for suggested test equipment.

Troubleshooting Techniques

This troubleshooting procedure is arranged in an order which checks the simple trouble possibilities before proceeding with extensive troubleshooting. The first few checks ensure proper connection, operation, and calibration. If the trouble is not located by these checks, the remaining steps will aid in locating the defective component. When the defective component is located, it should be replaced following the replacement procedure given under Corrective Maintenance.

1. CHECK CONTROL SETTINGS. Incorrect control settings can indicate a trouble that does not exist. If there is any question about the correct function or operation of any control, see the Operating Instructions section of this manual or the 465B Operators Manual.

2. CHECK ASSOCIATED EQUIPMENT. Before proceeding with troubleshooting, check that the equipment used with this instrument is operating correctly. Check that the signal is properly connected and that the interconnecting cables are not defective. Also, check the power source.

3. CHECK INSTRUMENT CALIBRATION. Check the calibration of this instrument, or the affected circuit if the trouble exists in one circuit. The apparent trouble may only be a result of misadjustment and may be corrected by adjustment. Complete adjustment instructions are given in the Calibration Procedure section of this manual.

4. VISUAL CHECK. Visually check the portion of the instrument in which the trouble is located. Many troubles can be located by visible indications such as unsoldered connections, broken wires, damaged circuit boards, damaged components, etc.

5. ISOLATE TROUBLE TO A CIRCUIT. To isolate trouble to a particular circuit, note the trouble symptom. The symptom often identifies the circuit in which the trouble is located. When trouble symptoms appear in more than one circuit, check the power supplies, then check the affected circuits. If the trouble has been isolated to a power supply, follow the Troubleshooting Chart for that supply. The power supplies are interdependent. All the low-voltage power supplies depend on +55 volts for reference. If more than one supply appears defective, repair them in the following order: +55 Volt, +110 Volt, +15 Volt, −8 Volt, and −2450 Volt.

6. CHECK CIRCUIT BOARD INTERCONNECTIONS. After the trouble has been isolated to a particular circuit, check for loose or broken connections, improperly seated transistors, and heat-damaged components.

7. CHECK VOLTAGES AND WAVEFORMS. Often the defective component can be located by checking for the correct voltage or waveform in the circuit. Typical voltages are given on the diagrams. Waveforms are shown at the left of the circuit diagram.

NOTE

Voltages and waveforms given on the diagrams are not absolute and may vary slightly between instruments. To obtain operating conditions similar to those used to take these readings, see the voltage and waveform setup procedures at the beginning of the Diagrams section for the preliminary equipment setup. Note the recommended test equipment, front panel control settings, voltage and waveform conditions, and test equipment cable connection instructions. The 465B Oscilloscope control settings required to obtain the given waveforms and voltages are located adjacent to the waveform diagrams. Changes to the control settings from the preliminary setup, other than those given, are not required.

http://manoman.sghill.com

8. CHECK INDIVIDUAL COMPONENTS. The following procedures describe methods of checking individual components. Components that are soldered in place are best checked by disconnecting one end. This isolates the measurement from the effects of surrounding circuitry.

WARNING

The Power switch must be turned off before removing or replacing components.

Semiconductors. A good check of transistor operation is actual performance under operating conditions. A transistor can be most effectively checked by substituting a new component for it (or one which has been checked previously). However, be sure that circuit conditions are not such that a replacement transistor might also be damaged. If substitute transistors are not available, use a dynamic tester. Static-type testers are not recommended, since they do not check operation under simulated operating conditions.

When troubleshooting transistors in the circuit with a voltmeter, measure the emitter-to-base and emitter-to-collector voltages to determine if the voltages are consistent with normal circuit voltage. Voltages across a transistor vary with the type of device and its circuit function. Some of these voltages are predictable. The emitter-to-base voltage of a conducting silicon transistor will normally be 0.6 to 0.8 volt. The emitter-to-collector voltage of saturated transistors is approximately 0.2 volt. Because these values are small, the best way to check them is by connecting the voltmeter across the junction and use a sensitive voltmeter setting. This method is preferable to comparing two voltages taken with respect to ground (both leads of the voltmeter must be isolated from ground, if this method is used). If values less than these are obtained, either the device is short-circuited or no current is flowing in the circuit. If values are in excess of the base-emitter voltages given, the junction is back-biased or the device is defective. Values in excess of those given for emitter-collector voltages could indicate either a non-saturated device operating normally, or a defective (open-circuited) transistor. If the device is conducting, voltage will be developed across resistances in series with it; if it is open, no voltage will be developed across resistances in series with it unless current is being supplied by a parallel path.

When troubleshooting a field-effect transistor, the voltage across its elements can be checked in the same manner as for a transistor. However, it should be remembered that in the normal depletion mode of operation, the gate-to-source junction is reverse biased; in the enhanced mode, the junction is forward biased.

Integrated circuits (IC) can be checked with a voltmeter, test oscilloscope, or by direct substitution. A good understanding of circuit operation is essential to troubleshooting circuits using IC. Use care when checking voltages and waveforms around the IC so that adjacent leads are not shorted together. Typical semiconductor lead configurations are shown at the beginning of the Diagrams section.

Diodes. A diode can be checked for an open or a short circuit by measuring the resistance between terminals with an ohmmeter set to the R X 1k scale. The diode resistance should be very high in one direction and very low when the meter leads are reversed. Do not check tunnel diodes or back diodes with an ohmmeter.

CAUTION

Do not use an ohmmeter scale that has a high internal current. High currents may damage the diode. Do not measure tunnel diodes with an ohmmeter; use a dynamic tester (such as a TEKTRONIX Type 576 Transistor-Curve Tracer). Checks on diodes can be performed in much the same manner as on transistor emitter-to-base junctions. Silicon diodes should have 0.6 to 0.8 volt across the junction when conducting. Higher readings indicate that they are either back biased or defective, depending on polarity.

Resistors. Check the resistors with an ohmmeter. Check the Replaceable Electrical Parts List for tolerance of the resistors used in this instrument. Resistors normally do not require replacement unless the measured value varies widely from the specified value.

Inductors. Check for open inductors by checking continuity with an ohmmeter. Shorted or partially shorted inductors can usually be found by checking the waveform response when high-frequency signals are passed through the circuit.

Capacitors. A leaky or shorted capacitor can best be detected by checking resistance with an ohmmeter on the highest scale. Do not exceed the voltage rating of the capacitor. The resistance reading should be high after initial charge of the capacitor. An open capacitor can be detected with a capacitance meter or by checking whether the capacitor passes ac signals.

Attenuators. The thick film attenuators are best checked by substitution. If only one channel of the 465B is not operating properly, and there is reason to believe an attenuator is defective, replace the suspected attenuator

http://manoman.sqhill.com

with the same attenuator from the other channel and check instrument operation. If proper operation results, order a new attenuator.

9. REPAIR AND READJUST THE CIRCUIT. If any defective parts are located, follow the replacement procedures given in this section. Be sure to check the performance of any circuit that was repaired or that had any electrical components replaced. Readjustment of the affected circuit may be necessary. Check Table 4-6 in the Calibration Procedure section of this manual for possible adjustment interaction.

CORRECTIVE MAINTENANCE

Introduction

Corrective maintenance consists of component replacement and instrument repair. Special techniques required to replace components in this instrument are given here.

Maintenance Precautions

To reduce the possibility of personal injury or instrument damage, observe the following precautions.

1. Disconnect instrument from power source before removing or installing components.

2. Use care not to interconnect instrument grounds which may be at different potentials (cross grounding).

3. Do not use excessive heat when soldering. This can damage circuit boards and semiconductors.

Static-Sensitive Components

CAUTION

Static discharge can damage any semiconductor component in this instrument.

This instrument contains electrical components that are susceptible to damage from static discharge. See Relative Susceptibility Table for various classes of semiconductors. Static voltages of 1 kV to 30 kV are common in unprotected environments.

Observe the following precautions to avoid damage:

1. Minimize handling of static-sensitive components.

2. Transport and store static-sensitive components or assemblies in their original containers, on a metal rail, or on conductive foam. Label any package that contains static-sensitive assemblies or components.

3. Discharge the static voltage from your body by wearing a wrist strap while handling these components. Servicing static-sensitive assemblies or components should be performed only at a static-free work station by qualified service personnel.

4. Nothing capable of generating or holding a static charge should be allowed on the work station surface.

5. Keep the component leads shorted together whenever possible.

6. Pick up components by the body, never by the leads.

7. Do not slide the components over any surface.

8. Avoid handling components in areas that have a floor or work-surface covering capable of generating a static charge.

9. Use a soldering iron that is connected to earth ground.

10. Use only special antistatic suction type or wick type desoldering tools.

http://manoman.sghill.com

RELATIVE SUSCEPTIBILITY TO STATIC DISCHARGE DAMAGE

Semiconductor Classes	Relative Susceptibility Levels[a]
MOS or CMOS microcircuits or discretes, or linear microcircuits with MOS inputs. (Most Sensitive)	1
ECL	2
Schottky signal diodes	3
Schottky TTL	4
High-frequency bipolar transistors	5
JFETs	6
Linear microcircuits	7
Low-power Schottky TTL	8
TTL (Least Sensitive)	9

[a]**Voltage equivalent for levels:**

1 = 100 to 500 V 4 = 500 V 7 = 400 to 1000 V (est.)
2 = 200 to 500 V 5 = 400 to 600 V 8 = 900 V
3 = 250 V 6 = 600 to 800 V 9 = 1200 V
(Voltage discharge from a 100 pF capacitor through a resistance of 100 ohms.)

Obtaining Replacement Parts

STANDARD PARTS. Most electrical and mechanical parts can be obtained through your local Tektronix Field Office or representative. However, you should be able to obtain many of the standard electronic components from a local commercial source in your area. Before you purchase or order a part from a source other than Tektronix, Inc., please check the Replaceable Electrical Parts List for the proper value, rating, tolerance and description.

NOTE

Physical size and shape of a component may affect instrument performance, particularly at high frequencies. Always use direct-replacement components, unless it is known that a substitute will not degrade instrument performance.

SPECIAL PARTS. In addition to the standard electronic components, some special components are used in the 465B. These components are manufactured or selected by Tektronix, Inc. to meet specific performance requirements, or are manufactured for Tektronix, Inc. in accordance with our specifications (see Cross Index-Manufacturers Code Number to Manufacture in Replaceable Electrical Parts List for code numbers). Most of the mechanical parts used in this instrument have been manufactured by Tektronix, Inc. Order all special parts directly from your local Tektronix Field Office or representative.

ORDERING PARTS. When ordering replacement parts from Tektronix, Inc., it is imperative that all of the following information be included in order to ensure receiving the proper parts.

1. Instrument type (include modification or option numbers).

2. Instrument serial number.

3. A description of the part (if electrical, include the circuit number).

4. Tektronix part number.

Soldering Techniques

WARNING

Always disconnect the instrument from the power source before attempting to solder in the instrument.

Ordinary 60/40 solder and a 35- to 40-watt pencil-type soldering iron can be used to accomplish the majority of the soldering. If a higher wattage-rating soldering iron is used on the etched circuit boards, excessive heat can cause the etched circuit wiring to separate from the board base material.

CAUTION

The Vertical Preamplifier Attenuator circuit boards are made of material easily damaged by excessive heat. When soldering to these boards, do not use a soldering iron with a rating of more than approximately 15 watts. Avoid prolonged applications of heat to circuit-board connections. Use only isopropyl alcohol when cleaning this circuit board.

The following technique should be used to replace a component on the circuit board. Most components can be replaced without removing the boards from the instrument.

http://manoman.sqhill.com

1. Grip the component lead with long-nose pliers. Touch the soldering iron to the lead at the solder connection. Do not lay the iron directly on the board, since it may damage the board.

2. When the solder begins to melt, pull the lead out gently. This should leave a clean hole in the board, If not, the hole can be cleaned by reheating the solder and placing a sharp object such as a toothpick into the hole to clean it out. A vacuum-type desoldering tool can also be used for this purpose.

3. Bend the leads of the new component to fit the holes in the board. If the component is replaced while the board is mounted in the instrument, cut the leads so they will just protrude through the board. Insert the leads into the holes in the board so the component is firmly seated against the board (or as positioned originally). If it does not seat properly, heat the solder and gently press the component into place.

4. Touch the iron to the connection and apply a small amount of solder to make a firm solder joint. To protect heat-sensitive components, hold the lead between the component body and the solder joint with a pair of long-nose pliers or other heat sink.

5. Clip the excess lead that protrudes through the board (if not clipped in step 3).

6. Clean the area around the solder connection with a flux-remover solvent. Be careful not to remove information printed on the board.

When soldering to the ceramic strips in the instrument, a slightly larger soldering iron can be used. It is recommended that a solder containing about 3% silver be used when soldering to these strips to avoid destroying the bond to the ceramic material. This bond can be broken by repeated use of ordinary tin-lead solder or by the application of too much heat; however, occasional use of ordinary solder will not break the bond, if excessive heat is not applied.

If it becomes necessary to solder in the general area of any of the high-frequency contacts in the instrument, clean the contacts immediately upon completion of the soldering. Refer to the Switch Contacts paragraph in the Preventive Maintenance part of this section for recommended cleaners and procedures.

Component Removal and Replacement

WARNING

Always disconnect the instrument from the power source before attempting to replace components.

CIRCUIT BOARDS. Occasionally it may be necessary to gain access to the reverse side of a circuit board or to remove one circuit board to gain access to another. The following procedures outline the necessary steps to facilitate instrument disassembly and reassembly. Most of the connections to the circuit boards in the instrument are made with pin connectors. However, some connections are soldered to the board. Observe the soldering precautions given under Soldering Techniques in this section.

VERTICAL PREAMPLIFIER ASSEMBLY. Remove and replace this assembly as follows:

1. Remove instrument wrap-around cabinet in the manner given under Cabinet Removal at the beginning of this section.

2. Loosen front setscrews in the Vertical POSITION control shaft couplers (0.050" Allen wrench required) and the VAR VOLTS/DIV control shaft couplers. Slide shafts out of the couplers and remove them from the instrument.

3. Disconnect the INVERT and 20 MHz BW LIMIT push-button extension shafts from the switch shafts. Insert a scribe or similar tool between the end of the white plastic shaft and the inside of the black plastic extension shaft, then pry gently. Extension shafts will snap back into position when reassembling.

4. Disconnect the following wires and cables:

a. Ten coaxial cables from the Preamplifier circuit board. Make a note of cable color codes to aid in proper installation during reassembly.

b. Unplug the delay-line connection from the end of the Preamplifier circuit board toward the rear of the instrument.

c. Locate the ground braid (near the High Voltage shield) connecting the Preamplifier circuit board to the Interface circuit board. Unsolder the end of the braid attached to the Preamplifier circuit board.

d. Unplug P1565, a three-wire connector near the middle of the Preamplifier circuit board.

http://manoman.sghill.com

e. Unplug P1505, an eight-wire connector near the rear of the Preamplifier circuit board.

5. Remove 10 screws from attenuator covers (five in each cover) and lift covers from attenuator assemblies.

6. Unsolder two resistors that connect from the Vertical Preamplifier circuit board to the Attenuator boards.

7. Remove six circuit board hold-down screws from the Preamplifier circuit board and remove board from the instrument.

8. To replace the Vertical Preamplifier circuit board, use the reverse of the removal steps.

VERTICAL MODE SWITCH AND ATTENUATORS. Remove and replace these assemblies as follows:

1. Loosen front setscrews in the Vertical POSITION control shaft couplers and the VAR VOLTS/DIV control shaft couplers. Slide shafts out of the couplers and remove them from the instrument.

2. Disconnect INVERT and 20 MHz BW LIMIT push-button extension shafts from the switch shafts. Insert a scribe or similar tool between the end of the white plastic shaft and the inside of the black plastic extension shaft, then pry gently. Extension shafts will snap back into position when reassembling.

3. Loosen six Vertical Preamplifier board hold-down screws (do not remove).

4. Remove knobs from the VOLTS/DIV switches. Loosen setscrews and pull to remove (requires a 1/16" Allen wrench).

5. Remove the AC-GND-DC lever switch knobs by pulling them straight off.

6. Unplug both input coupling capacitors from the board. Bend capacitors out of the way, leaving the soldered lead attached.

7. Remove four nuts securing the attenuator chassis to the instrument front casting (1/4" nutdriver required).

8. Disconnect the following wires and connectors:

a. P5232, a three-wire connector (to the Interface circuit board).

b. P5236 and P5235, two-wire connectors (to the VAR VOLTS/DIV potentiometers).

c. P5036, a six-wire connector (to the CH 1 and CH 2 VOLTS/DIV UNCAL LED and the 20 MHz BW LIMIT LED).

d. P5001, an eight-wire connector at rear of Vertical Mode Switch circuit board (to the Preamplifier circuit board).

e. P5056 and P5265, three-wire connectors (to the Probe Coding boards).

f. Single red lead near the stand-off post at the rear of the Vertical Mode Switch circuit board.

9. Remove securing screw and hexagonal stand-off post from the rear of the Vertical Mode Switch circuit board.

10. Remove Vertical Mode Switch circuit board from the instrument.

11. To reinstall the Vertical Mode Switch and attenuators, use the reverse of the removal steps.

TRIGGER GENERATOR AND SWEEP LOGIC BOARD. Remove and replace this board as follows:

1. Disconnect the following cables and wires:

a. Eight coaxial cables from component side of the Trigger Generator and Sweep Logic circuit board. Make note of cable color codes to aid in proper installation when reassembling.

b. P7010 and P7305, five-wire connectors (to the A and B TRIGGER SLOPE controls).

c. P7204, a four-wire connector (to TRIG and READY LED). Guide the connector through the slotted hole when removing the circuit board.

d. P7105, a two-wire connector (to POWER LED).

http://manoman.sqhill.com

e. P7052, a three-wire connector near top center of Trigger Generator and Sweep Logic circuit board.

f. Unsolder the wires from the External Trigger Input connectors.

2. Remove POWER-switch-actuator rod from the plastic holder on the switch. Pry rod out of the holder with a small flat-bladed screwdriver and remove rod from the instrument.

3. Remove POWER switch bracket from the circuit board (3/16" wrench or nutdriver required). The white plastic circuit board support on back side of board may fall off when circuit board hold-down screws are removed; save it for reinstallation.

4. Remove five circuit board hold-down screws (Phillips screwdriver required) from the board (two at rear, two at front, and one in a post at top center of the board). Also remove post (3/16" wrench or nutdriver required).

5. Unplug Trigger Generator and Sweep Logic circuit board by prying Trigger board away from Interface board at the two white interboard connectors (at bottom edge of the Trigger board).

6. Move Trigger board to the rear until Trigger switches clear the front casting to remove the assembly from the instrument. Exercise caution to avoid damaging the connector pins on the Interface board.

7. To reinstall the Trigger Generator and Sweep Logic circuit board, reverse the order of the removal steps. If indexing of the Trigger switches was disturbed, a series of alignment steps will be required to return the indexing to its correct position. After each adjustment to the switch positioning, the board must be reinstalled to check out the switch operation.

SWEEP TIMING CIRCUIT BOARD. Remove and replace this board as follows:

1. Disconnect the following wires:

a. P6014, a two-wire connector (to main cable harness).

b. P6002, a three-wire connector (to DELAY TIME POSITION potentiometer).

c. P6001, a four-wire connector (to X10 MAG and UNCAL LED).

2. Remove VAR TIME/DIV, A TIME/DIV, and B TIME/DIV knobs (1/16" and 5/64" Allen wrenches required). The VAR knob has one externally accessible Allen setscrew, and the large gray knob has two externally accessible Allen setscrews. The clear plastic skirt knob has two Allen setscrews which are accessible from behind the front panel casting. Black spacing rings may fall out; save them for reinstallation.

3. Remove the board hold-down screw and the hexagonal rod from the Sweep Timing circuit board (Phillips screwdriver and 3/16" wrench or nutdriver required).

4. Use a flat-blade screwdriver to pry the Timing board away from the Interface board. Gently pull away the corner of the Interface board near the B External Trigger input connector and simultaneously lift up on the Timing board near the rear to fully disengage connector pins from the Interface board.

5. To reinstall Timing board, reverse the order of the removal steps.

VERTICAL OUTPUT BOARD REMOVAL. Remove and replace this board as follows:

1. Unplug P4295, a six-wire connector at the top front corner of Vertical Output board.

2. Disconnect two wires from the crt neck. (Use long-nose pliers and gently pull connectors from the pins on the crt neck. Pull straight away from the crt neck to avoid putting a side strain on the metal-to-glass neck-pin seal.)

3. Unplug the delay-line terminal from the top right corner of the board.

4. Remove the integrated circuit mounting nut from main chassis. Use a 1/4" open-end wrench to loosen the nut.

5. Remove two circuit board hold-down screws along the top edge of the board and remove Vertical Output circuit board from the instrument. Save the nylon posts (located behind front edge of board) for reinstallation.

6. To reinstall Vertical Output circuit board, reverse the order of the removal steps.

http://manoman.sqhill.com

MAIN INTERFACE BOARD REMOVAL. If repair is necessary on reverse side of the Main Interface board, it is possible to gain access to that area by removal of one or two circuit boards as previously outlined. Consider this first before proceeding with Main Interface board removal procedure. (There is no reason to remove the Main Interface board except for exchange.)

CAUTION

If the Main Interface board becomes defective, it is recommended that your local Tektronix Field Office or representative be contacted to arrange instrument repair at a Tektronix Service Center.

The Main Interface board can be removed as follows:

1. Remove Trigger Generator and Sweep Logic board as previously outlined.

2. Position the instrument with the front to your right and the Interface board facing you.

3. Remove the high-voltage shield from Interface board.

4. Remove BEAM FIND and X10 MAG push-button extension shafts. Insert a scribe or small screwdriver between the end of the white plastic switch shaft and the inside of the black plastic extension shaft, then pry gently.

5. Remove INTENSITY, FOCUS, SCALE ILLUM, ASTIG, and TRACE ROTATION control extension shafts. Loosen front setscrew in each coupling with a 0.050" Allen wrench.

6. Disconnect twelve ribbon- or wire-cable connectors from Main Interface board and note the location, quantity, and color of wires for each plug for reassambly reference:

a. P4009, a three-wire connector at the top left corner of the board (to Q14009).

b. P4035, a four-wire connector near top center of the board (to crt socket).

c. P4069, a two-wire connector near the INTENSITY potentiometer at top center of the board (to the Fan board).

d. P4057, a three-wire connector near the INTENSITY potentiometer at top center of the board (to Vertical Mode Switch).

e. P4061, a three-wire connector near the INTENSITY potentiometer at top center of the board (to Vertical Preamp board).

f. P4058, a six-wire connector near the INTENSITY potentiometer at top center of the board (to Vertical Output board).

g. P4086, a two-wire connector near Q4190 (to graticule lights).

h. P4165, a two-wire connector near the front of the INTENSITY potentiometer (Y-Axis).

i. P4176, a two-wire connector near the TRACE ROTATION potentiometer (to crt).

j. P4398, a six-wire connector from the TRACE SEP and B INTENSITY potentiometers, at the front of the board.

k. P4498, a six-wire connector from the TRACE SEP and HOLDOFF potentiometers, at the front of the board.

l. P4561, a three-wire connector near the bottom center of the board (from the HOLDOFF control).

7. Unsolder the CALIBRATOR loop from Main Interface board.

8. Unsolder five wires from Main Interface board and confirm each wire's color and location in the following list for reassembly reference (high-voltage wires to crt socket):

a. Wire to the one-notch ceramic strip is white with a yellow stripe.

b. Wire to the −2450 volts test point (TP4129) is white with a red stripe.

c. Wire to center notch on the three-notch ceramic strip is white with an orange stripe.

d. Lowest of a pair of wires between the large high-voltage capacitors is white with brown and yellow stripes.

http://manoman.sqhill.com

e. Upper wire of a pair of wires between the large high-voltage capacitors is white with a brown stripe.

9. Disconnect horizontal deflection plate leads at the crt. This requires a pair of long-nose pliers for best removal or reinstallation (pull connectors straight out from pins to avoid strain on metal-to-glass neck-pin seal).

10. Unplug five connectors from Main Interface board. Confirm each wire's color and location in the following list for reassembly reference:

a. J4325, white with black and brown stripes, from near the rear middle of the board.

b. J4387, white with a red stripe, from near the front of the board.

c. J4385, white with black and red stripes, from near the front of the board.

d. J4388, white with a blue stripe, from near the front of the board.

e. J4475, white with an orange stripe, from between the interboard connectors (to the Sweep Timing circuit board).

11. Unsolder one wire from near the left middle of the board (under cable harness).

12. Remove power transistor mounting screw from Q4102, Q4301, and Q4401.

13. Remove mounting screw from transistor Q4312 near the lower rear corner of the board.

14. Remove mounting screw from transistor Q4190 near the top right corner of the board.

15. Remote four hexagonal posts that stand-off the high-voltage shield. Use a 3/16" nutdriver.

16. Remove seven Main Interface board mounting screws. A Phillips screwdriver is required.

WARNING

The crt anode and the output terminal of high-voltage multiplier may retain a high-voltage charge after the instrument is turned off. To avoid electrical shock, ground both the output terminal of the multiplier and the crt high-voltage anode lead to chassis ground.

17. Disconnect crt anode-lead plug from the high-voltage multiplier jack. Ground this lead to the instrument main chassis to remove any stored charge. Insert a medium-size screwdriver tip between the multiplier jack body and the hold down spring clip. Pry the multiplier jack out of the spring clip.

18. Separate Main Interface circuit board from the instrument chassis, using care to prevent damage to components or wiring. Carefully thread interconnecting cables through the board and chassis, as necessary, to avoid strain on any cable. Let the board pivot on power-transformer leads that are still connected to the board.

NOTE

You can now perform repairs on the reverse side of the Main Interface board, if repair is intended. To reinstall the board, reverse the order of the removal steps. If you intend to replace the Main Interface circuit board, continue with this procedure.

19. Unsolder power-transformer wires from Main Interface board. Confirm each wire's color and location in Figure 5-4. To facilitate reassembly, record any exceptions to this procedure.

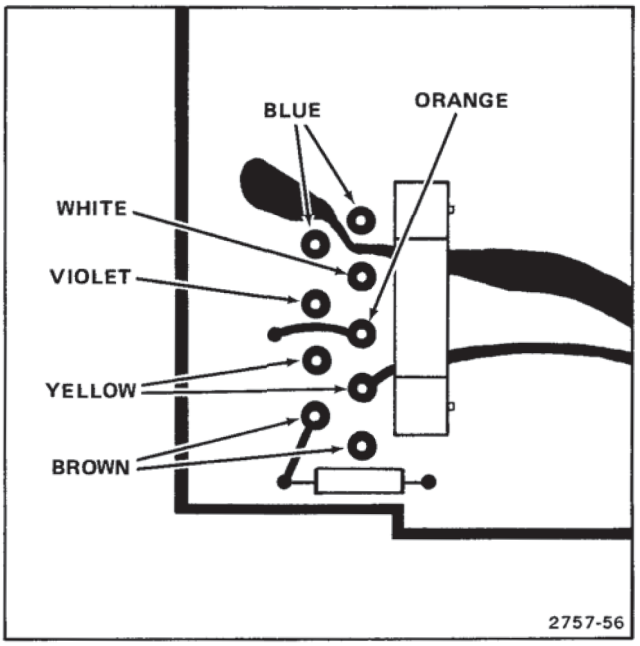

Figure 5-4. Locations of power trensformer secondary wires.

http://manoman.sqhill.com

20. Unsolder blue power-cord wire from the stand-off insulator near power transformer secondary wires. Feed wire through hole in the board.

21. Remove Main Interface board from the chassis, using care to prevent strain on any of the wires.

22. To facilitate reinstallation, remove solder from the holes in the circuit-board wire-terminal pads, if wires were removed in this procedure.

To reinstall the Main Interface circuit board, reverse the order of the removal steps.

NOTE

All of the mounted components are not supplied with a replacement Main Interface board. It will be necessary to exchange some components from the old board to the new board or new parts must be ordered.

POWER TRANSFORMER. If the power transformer becomes defective, be sure to replace only with a direct replacement Tektronix transformer. After the transformer is replaced, check the performance of the complete instrument. Remove the transformer as follows:

1. Unsolder the power cord from the Interface board, the Regulating Range Selector Assembly, and the solder lug on the rear subpanel.

2. Remove small blue panel from the rear panel of the instrument (short screw is at the top, and the long screw is at the left side). It will be necessary to remove rear ring assembly, as for cabinet removal (see Figure 5-1) and the Regulating Range Selector cover to allow removal of the panel.

3. Disconnect actuating shaft from the POWER switch coupler and remove shaft from the instrument. Be careful not to damage switch coupler.

4. Remove POWER switch mounting bracket from the Trigger board (3/16" wrench or nutdriver required).

5. Unsolder transformer leads from the Interface board and the solder lug on the rear subpanel. Note the wire color codes to facilitate correct reinstallation (see Figure 5-4).

6. Remove transformer leads from the Regulating Range Selector Assembly. It will be necessary to use a special pin removing tool available from Tektronix, Inc. (refer to Maintenance Aids information at end of this section). It is only necessary to use this tool to remove the transformer leads from the Selector Assembly. The leads may be reinstalled by simply pushing them into place. Note wire color codes to facilitate correct reinstallation.

7. Remove transformer bracket mounting hardware. This includes two screws on the Trigger board, one screw on the Interface board, two nuts on the U-channel (one on the transformer side and one on the crt side), and two screws and nuts on the rear subpanel.

8. Thoroughly loosen Trigger board, then lift the transformer assembly partially out until thermal cutoff retaining screws can be removed. Remove these retaining screws with a Phillips screwdriver and lift transformer assembly out of the instrument.

9. Remove thermal cutout and POWER switch from old transformer and install on new transformer. Note wire color codes to facilitate correct installation.

10. Install new transformer assembly in the instrument reversing the order of removal steps.

CATHODE RAY TUBE (CRT). Remove and replace the crt as follows:

WARNING

Use care when handling a crt. Protective clothing and safety glasses should be worn. Avoid striking it on any object which might cause it to crack or implode. When storing a crt, place it in a protective carton or set it face down on a smooth surface in a protective location with a soft mat under the faceplate to protect it from scratches.

1. Remove instrument wrap around cabinet in the manner given under Cabinet Removal at the beginning of this section.

2. Remove plastic bezel and filter from the front of the crt (held with four screws).

3. Remove rear cover (held by two flat-head screws).

4. Remove bell-shaped cover to expose crt socket (held by two screws).

http://manoman.sqhill.com

5. Unplug crt socket.

6. Remove the two vertical deflection pin connectors from the left side of the crt neck. (Use long-nose pliers and pull connectors straight off the crt neck to avoid strain on the metal-to-glass neck-pin seal.)

7. Set the instrument on its left side (Vertical Preamp board side).

8. Remove horizontal deflection pin connectors from bottom of the crt neck (accessible through a hole in the Interface board). (Refer to step 6 for removal method.)

9. Position the instrument so the top is accessible.

WARNING

The crt anode and the output terminal of high-voltage multiplier may retain a high-voltage charge after the instrument is turned off. To avoid electrical shock, ground both the output terminal of the multiplier and the crt high-voltage anode lead to chassis ground.

10. Locate anode lead connector that is held in place by a metal spring clip fastened to the chassis. Pull the top portion of the anode lead out of the connector (where the connector plugs together, just above the metal spring clip) and discharge the metal tip to the chassis.

11. Holding one hand on the crt face, push slowly on the crt base with the other hand. Guide the anode connector through the crt shield while slowly pulling the crt out of the instrument. The plastic corner pads may fall out during removal; save them for reinstallation.

12. Reverse the above procedure to install a crt. Observe the following precautions:

a. Be sure to guide anode lead through the hole in the crt shield while pushing crt into the instrument.

b. Be sure plastic corner pads are securely seated.

c. Be sure plastic centering ring firmly centers the crt neck. Reposition the ring as necessary.

HIGH VOLTAGE MULTIPLIER. Remove and replace the High Voltage Multiplier as follows:

1. Remove Vertical Preamplifier board and crt as previously described.

2. Slide the round part of the crt shield to the rear about two inches.

3. Remove high voltage shield (held on by four screws). Note position of the cabinet grounding clip for reassembly reference.

4. Remove four 3/16" stand-off posts to which the high voltage shield is secured.

5. Remove mounting screw from Q4102 and Q4301 at the rear of the Interface board.

6. Remove circuit board hold-down screw just forward of P4165 on the Interface board.

7. Remove the shield from the high voltage transformer and high voltage multiplier (shield held by three screws).

8. Unsolder black wire (between the High Voltage Multiplier and the Interface board) from the Interface board.

9. Unsolder the diode and the wire from the post on the High Voltage Multiplier.

10. Remove two nylon nuts securing the High Voltage Multiplier to the Interface board.

11. Remove High Voltage Multiplier (carefully pry up on the Interface board as necessary to facilitate removal).

12. Reverse above procedure to install the High Voltage Multiplier.

TRANSISTORS AND INTEGRATED CIRCUITS. Transistors and IC (integrated circuits) should not be replaced unless they are actually defective. If removed from their sockets during routine maintenance, return them to their original sockets. Unnecessary replacement or switching of semiconductor devices may affect the

http://manoman.sghill.com

adjustment of the instrument. When a transistor is replaced, check the operation of the part of the instrument that may be affected.

Any replacement component should be of the original type or a direct replacement. Bend the leads to fit the socket and cut the leads to the same length as on the component being replaced. See Figure 8-1 for basing diagrams.

To remove the 14-, 16-, and 20-pin integrated circuits, pull slowly and evenly on both ends of the device. Try to avoid having one end of the integrated circuit disengage from the socket before the other, since this may damage the pins.

WARNING

Handle silicone grease with care. Avoid getting silicone grease in the eyes. Wash hands thoroughly after use.

WARNING

Voltages are present on the exterior surface of the chassis-mounted power supply transistors if power is applied to the instrument and the POWER switch in on.

The chassis-mounted power supply transistors and their mounting bolts are insulated from the chassis. In addition, silicone grease is used to increase heat transfer capabilities. Reinstall the insulators and replace the silicone grease when replacing these transistors. The grease should be applied to both sides of the mica insulators and should be applied to the bottom side of the transistor, where it comes in contact with the insulator.

NOTE

After replacing a power transistor, check that the collector is not shorted to ground before applying power.

INTERCONNECTING PINS. Two methods of interconnection are used in this instrument to connect the circuit boards with other boards and components. When the interconnection is made with a coaxial cable, a special end-lead connector plugs into a socket on the board. Other interconnections are made with a pin soldered onto the board. Two types of mating connections are used for these interconnecting pins. If the mating connector is on the end of a lead, an end-lead pin connector is used which mates with the interconnecting pin. The following information provides the replacement procedure for the various types of interconnecting methods:

Coaxial-Type End-Lead Connectors. Replacement of the coaxial-type end-lead connectors requires special tools and techniques; only experienced maintenance personnel should attempt replacement of these connectors. It is recommended that the cable or wiring harness be replaced as a unit. For cable or wiring harness part numbers, see the Replaceable Mechanical Parts List. An alternative solution is to refer the replacement of the defective connector to your local Tektronix Field Office or representative.

NOTE

A circuit-board pin-replacement kit including necessary tools, instructions, and replacement pins is available from Tektronix, Inc. (see Maintenance Aids information at the end of this section).

Circuit Board Pins. To replace a pin which is mounted on a circuit board, first disconnect any pin connectors, then, unsolder the damaged pin and pull it out of the circuit board with a pair of pliers. Be careful not to damage the wiring on the board with too much heat. Ream out the hole in the circuit board with a 0.031" drill bit. Remove the ferrule from the new interconnecting pin and press the new pin into the hole in the circuit board. Position the pin in the same manner as the old pin. Then solder the pin on both sides of the circuit board. If the old pin was bent at an angle to mate with a connector, carefully bend the new pin to match the associated pins.

Circuit Board Pin Sockets. The pin sockets on the circuit boards are soldered to the rear of the board. To replace one of these sockets, first unsolder the pin (use a vacuum-type desoldering tool to remove excess solder). Then straighten the tabs on the socket and remove it from the hole in the board. Place the new socket in the circuit board hole and press the tabs down against the board. Solder the tabs of the socket to the circuit board; be careful not to get solder into the socket.

NOTE

The spring tension of the pin sockets ensures a good connection between the circuit board and the pin. This spring tension can be destroyed by using the pin sockets set as a connecting point for spring-loaded probe tips, alligator clips, or other devices.

End-Lead Pin Connectors. The pin connectors used to connect the wires to the interconnecting pins are factory assembled. They consist of machine-installed pin connec-

http://manoman.sqhill.com

tors mounted in plastic holders. The plastic holders are easily replaced as individual items; but if the connectors are faulty, the entire cable assembly should be replaced. Individual pin connectors are listed in the parts list, but special tools are required for installation.

When pin connectors are grouped together and mounted in a plastic holder, these connectors are removed and installed as a multi-pin connector. To provide correct orientation of this multi-pin connector when it is replaced, an arrow is stamped on the circuit board, and a matching arrow is molded into the plastic housing of the multi-pin connector. Be sure these arrows are aligned when the multi-pin connector is reinstalled. If the individual end-lead pin connectors are removed from the plastic holder, note the color of the individual wires to facilitate replacement.

CERAMIC TERMINAL STRIPS. Replacement strips (including studs) and spacers are supplied under separate part numbers. However, the old spacers may be reused if they are not damaged. The applicable Tektronix part numbers for the ceramic strips and spacers used in this instrument are given in the Replaceable Mechanical Parts list.

Remove ceramic terminal strips as follows:

1. Unsolder all components and connections on the strip. To aid in replacing the strip, it may be advisable to mark each lead or draw a sketch to show location of the components and connections.

2. Pry or pull the damaged strip from the chassis.

3. If the spacers come out with the strip, remove them from the stud pins for use on the new strip (spacers should be replaced if they are damaged).

Replace ceramic terminal strips as follows:

1. Place the spacers in the chassis holes.

2. Carefully press the studs of the strip into the spacers until they are completely seated.

3. If the stud extends through the spacers, cut off the excess.

4. Replace all components and connections. Observe the soldering precautions under Soldering Techniques in this section.

Readjustment After Repair

After any electrical component has been replaced, the adjustments for that particular circuit should be checked, as well as the adjustment of other closely related circuits. Since the power supply affects all circuits, adjustment of the entire instrument should be checked if work has been done in the power supply or if the transformer has been replaced.

Instrument Repackaging

Should reshipment become necessary, reuse the carton in which your instrument was shipped. If the original packaging is unfit for use or is not available, repackage the instrument as follows:

1. Obtain a carton of corrugated cardboard having inside dimensions of no less than six inches more than the instrument dimensions; this will allow for cushioning. Use a carton having a test strength of at least 275 pounds.

2. Surround the instrument with polyethylene sheeting to protect the finish and prevent packing material from entering the instrument.

3. Cushion the instrument on all sides by tightly packing dunnage or urethane foam between carton and instrument, allowing three inches on all sides.

4. Seal carton with shipping tape or industrial stapler.

Required Reshipment Information

If the instrument is to be shipped to a Tektronix Service Center for service or repair, attach a tag containing the following information:

1. Owner's name and address, with the name of an individual at your firm who can be contacted.

2. Complete instrument serial number.

3. Description of the services required.

http://manoman.sqhill.com

MAINTENANCE AIDS

The following maintenance aids include items required for some maintenance procedures in this instrument. Equivalent products may be substituted for examples given providing characteristics are similar.

Description	Specifications	Use	Example
1. Soldering iron	15 Watt	General soldering and unsoldering	ANTEX PRECISION Model C
2. Screwdriver	Phillips #1 tip	Assembly and Disassembly	Xcelite Model X108
3. Screwdriver	Phillips #2 tip	Assembly and Disassembly	Xcelite Model X102
4. Screwdriver	Three-inch shaft; 3/32" flat bit	General	Xcelite R3323
5. Torque Screwdriver	1.5 inch-pounds	FUNCTION switch assembly	Sturtevant-Richmont Torque Products Model PM-5 Roto-Torq
6. Nutdrivers	1/4", 5/16" 3/8", 7/16"	General	Xcelite #8, #10, #12, & #14
7. Open End Wrench	1/4"	General	
8. Allen Wrenches	1/16", 5/64", 0.050"	Assembly and Disassembly	
9. Solder Wick		Unsoldering	Hex Wik #887-10
10. Lubricant	Versilube	FUNCTION switch lubrication	Tektronix Part Number 006-1353-00
11. Spray Cleaner	No Noise	FUNCTION switch pad cleaning	Tektronix Part Number 006-0442-02
12. Air Filter Adhesive		Coat air filter after cleaning	Tektronix Part Number 006-0580-00
13. Pin Removing Tool		Remove leads from Regulating Range Selector Assembly	Tektronix Part Number 003-0707-00
14. Circuit Board Pin Replacement Kit		Replace Circuit board connector pins	Tektronix Part Number 040-0542-00

http://manoman.sqhill.com

CAUTION

Before using any test equipment to make measurements on static-sensitive components or assemblies, be certain that any voltage or current supplied by the test equipment does not exceed the limits of the component to be tested.

Table 5-2

SUGGESTED TROUBLESHOOTING EQUIPMENT

Equipment	Minimum Specification	Usage	Examples
1. Semiconductor Tester	Dynamic type tester. Measure reverse breakdown voltages up to at least 400 V.	Test Semiconductors.	a. TEKTRONIX 576 Curve Tracer. b. TEKTRONIX 577 (D1 or D2) Curve Tracer with 177 Test Fixture
2. Test Oscilloscope with 10X voltage probe	Frequency response, dc to at least 100 MHz; deflection factor, 5 mV to 5 V/div; input impedance, 1 MΩ, 20 pf; sweep rate, 0.5 s to 0.02 μs/div.	Check operating waveforms.	TEKTRONIX 465B Oscilloscope with included 10X probe
3. Multimeter	Digital multimeter. Voltmeter input impedance, 10 MΩ range 0 to 150 volts; voltage accuracy, within 0.15%, display 4 1/2 digits. Ohmmeter, 0 to 20 MΩ.	Check voltages and general troubleshooting.	a. TEKTRONIX DM 501 Digital Multimeter[a] b. TEKTRONIX 465B Oscilloscope with DM44 Option
4. Variable Autotransformer	Variable from 0 to 140 V, 1.2 A. Equipped with 3-wire power cord, plug, and receptacle.	Vary input line voltage when troubleshooting the power supply.	General Radio W8MT3VM or W10MT3W Metered Variac Autotransformer

[a]**Requires a TM 500-Series power module.**

http://manoman.sqhill.com

OPTIONS

GENERAL OPTION INFORMATION

Your instrument may be equipped with one or more options. This section describes those options and provides required support documentation. Each Option part of this section is complete and supplies all the necessary information for operation and adjustment of the instrument. The Electrical and Mechanical Replaceable Parts list for each option are included at the end of the discussion of that option.

Index to Options Described in this section

	Page
Option 04	6-3
Option 05	6-5
Option 07[a]	6-23
Option 78	6-39

[a]Option 07 is not available on instruments equipped with the DM44 Digital Multimeter.

http://manoman.sqhill.com

OPTION 04
EMC ENVIRONMENTAL

INTRODUCTION

This section describes the features of Option 04 applicable to the 465B Oscilloscope. Circuitry in the instrument is modified to meet additional conducted and radiated interference requirements over the frequency range of 150 kHz to 25 MHz (conducted) and 150 kHz to 1 GHz (radiated).

The following changes are made to the standard instrument circuitry to meet the additional specification requirements. Figure 6-1 reflects the Option 04 instrument configuration.

EMI filter FL14500 is added in series with the input power cord.

A cathode-ray tube mesh filter is installed to minimize crt faceplate radiation.

Four signal-output bnc connectors on the rear plenum chamber are changed to a type that improves shielding of the connected signal leads.

Capacitors are added across the transformer secondary windings.

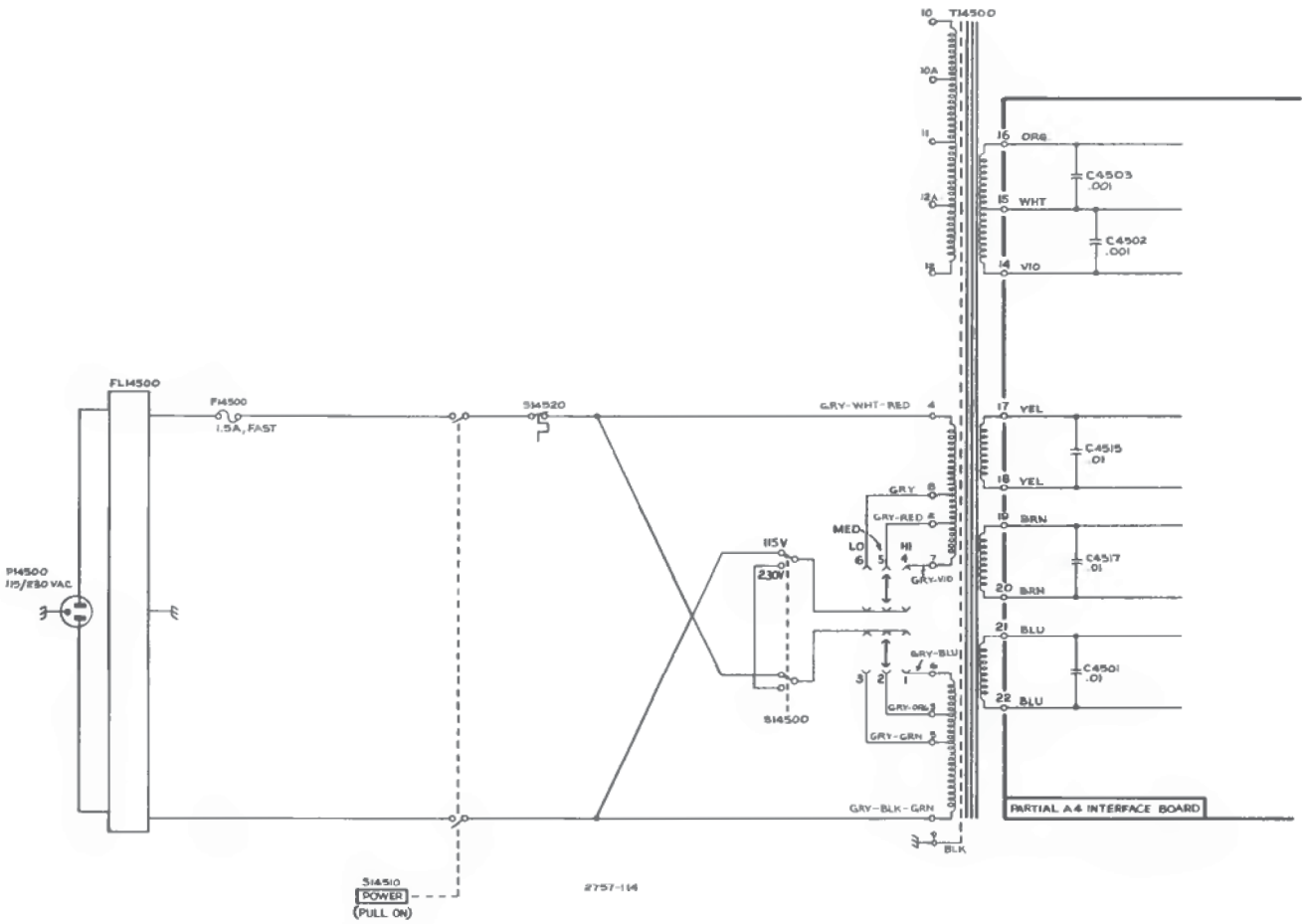

Figure 6-1. 465B Option 04 primary winding with power-line filter.

http://manoman.sqhill.com

ELECTRICAL

Component No.	Tektronix Part No.	Serial/Model No. Eff	Dscont	Name & Description	Mfr Code	Mfr Part Number
				CHANGES FROM STANDARD 465B WHEN OPTION 04 IS ADDED		
(CHANGE TO):						
A4	670-5996-01	B010100	B029999	CKT BOARD ASSY:INTERFACE	80009	670-5996-01
A4	670-5996-04	B030000		CKT BOARD ASSY:INTERFACE	80009	670-5996-04
A4C4501	283-0003-00			CAP.,FXD,CER DI:0.01UF,+80-20%,150V	72982	855-558Z5U-103Z
A4C4513	283-0003-00			CAP.,FXD,CER DI:0.01UF,+80-20%,150V	72982	855-558Z5U-103Z
A4C4517	283-0003-00			CAP.,FXD,CER DI:0.01UF,+80-20%,150V	72982	855-558Z5U-103Z
(ADD):						
A4C4502	283-0000-00			CAP.,FXD,CER DI:0.001UF,+100-0%,500V	72982	831-516E102P
A4C4503	283-0000-00			CAP.,FXD,CER DI:0.001UF,+100-0%,500V	72982	831-516E102P

MECHANICAL

Fig. & Index No.	Tektronix Part No.	Serial/Model No. Eff	Dscont	Qty	1 2 3 4 5	Name & Description	Mfr Code	Mfr Part Number
						CHANGES FROM STANDARD 465B WHEN OPTION 04 IS ADDED		
A4	----- -----			1		CKT BOARD ASSY:INTERFACE		
	131-0382-00			1		. TERMINAL,STUD:0.812 L,INSULATED	71279	572-4822-01-05-1
	210-0586-00			1		. NUT,PLAIN,EXT W:4-40 X 0.25 INCH,STL	78189	211-041800-00
						CHASSIS PARTS		
	119-0376-01			1		FILTER,RAD INT:2 X 3A,250V,400 HZ	80009	119-0376-01
						(ATTACHING PARTS)		
	211-0038-00			1		SCREW,MACHINE:4-40 X 0.314,FLH,100 DEG	83385	OBD
	210-0586-00			1		NUT,PLAIN,EXT W:4-40 X 0.25 INCH,STL	78189	211-041800-00
						- - - * - - -		
	131-0707-00			1		CONNECTOR,TERM.:22-26 AWG,BRS& CU BE GOLD	22526	47439
	131-0708-00			1		CONTACT,ELEC:0.48"L,28-32 AWG WIRE	22526	47437
	131-1310-00			1		CONTACT,ELEC:MESH FILTER GROUND	80009	131-1310-00
	131-1315-01			4		CONN,RCPT,ELEC:BNC,FEMALE	24931	28JR 306-1
	210-0774-00			2		EYELET,METALLIC:0.152 OD X 0.245 INCH L,BRS	80009	210-0774-00
	210-0775-00			2		EYELET,METALLIC:0.126 OD X 0.23 INCH L,BRS	80009	210-0775-00
	378-0726-00			1		FILTER,MESH:EMI	80009	378-0726-00
	334-3379-00			1		MARKER,IDENT:MARKED GROUNDSYMBOL	80009	334-3379-00
	348-0239-00			1		GROMMET,PLASTIC:DK GRAY,U-SHAPE,0.27 ID	80009	348-0239-00
	179-2739-00			1		WIRING HARNESS:MAIN	80009	179-2739-00
	195-0529-00			1		LEAD,ELECTRICAL:18 AWG,2.0 L,8-0	80009	195-0529-00

http://manoman.sqhill.com

OPTION 05
TV SYNC SEPARATOR

INTRODUCTION

Option 05, when installed in the 465B Oscilloscope, adds a TV Sync Separator and other changes to provide stable sweep triggering from composite video waveforms. Two positions are added to the A TRIGGER COUPLING switch: TV FIELD and TV LINE. When these positions are selected, the A Sweep may be triggered at the field or line rate with the A TRIGGER LEVEL control. A TV LINE position is also added to the B TRIGGER SOURCE switch. In this position, the B Sweep may be triggered at the line rate. The Option 05 circuitry accepts sync-positive or sync-negative video from Channel 1, Channel 2, or external input. Recognition circuits accommodate 405-, 525-, and 625-line, 50 or 60 Hz field-rate broadcast systems and are compatible with closed-circuit systems with up to 1201-line, 60 Hz field rates.

Option 05 provides the instrument with front-panel selection of additional processing of trigger signals, to facilitate observation and measurement of composite video and related television waveforms. Added circuits provide amplification, selectable polarity inversion, clipping, and vertical-sync recognition. Outputs of vertical and horizontal (field and line rate) triggers are connected to the A TRIGGER COUPLING switch, and horizontal (line rate) triggers are connected to the B TRIGGER SOURCE switch.

When the A TRIGGER COUPLING switch is set to either TV FIELD or TV LINE, the A TRIGGER SOURCE switch selects the source of signals to be processed in the Sync Separator. This includes NORM (composite vertical signal), CH 1, CH 2, EXT, or EXT/10 (LINE source is not a usable function with TV FIELD or TV LINE coupling).

The Option 05 circuitry may be operated from normal sync-negative composite video (with the A TRIGGER SLOPE switch at −) or from inverted video (SLOPE switch set to +). This applies to most standard broadcast systems using from 405 to 819 lines, 50 or 60 Hz field rates, or to closed-circuit systems using up to 1201 lines and 60 Hz field.

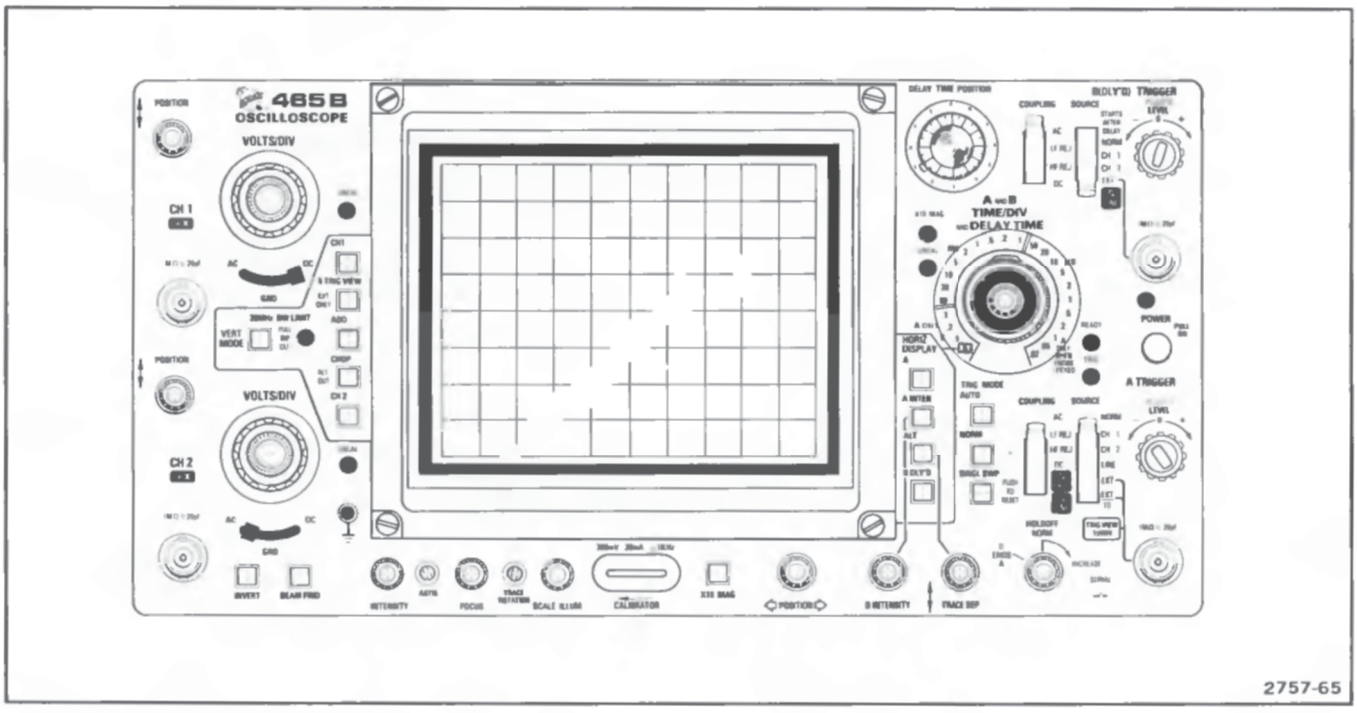

Figure 6-2. 465B Oscilloscope with Option 05.

http://manoman.sqhill.com

When the A TRIGGER COUPLING switch is set to TV FIELD or TV LINE, the output of the Sync Separator is automatically applied to the A Sweep Trigger circuits, and only this signal may be used for triggering the A Sweep. For B Sweep, the horizontal sync signal (line-rate sync) from the Separator is fed only to the TV LINE position on the B TRIGGER SOURCE switch, which may be selected at the option of the user.

To optimize video measurements, the vertical amplifier ac input coupling capacitors are increased from 0.02 to 0.2 microfarad. The larger physical size of these capacitors increases the input shunt capacitance, which is normalized at 24 picofarads.

This following descriptive text includes the characteristics, operation, and maintenance of the added features of Option 05. For all other information concerning the 465B Oscilloscope, refer to appropriate sections of the Operators manual or this Service manual.

SPECIFICATION

Electrical characteristics and performance requirements listed in the Specification part of this manual are applicable to the 465B Option 05 oscilloscope with the following exceptions or additions.

Input

Resistance	1 MΩ ±2%
Capacitance	Approximately 24 pF
Time Constant	Approximately 24 μs

AC Input Coupling

Low Frequency −3 dB point

Direct	≤1 Hz
Via 10X Passive Probe	0.1 Hz

Tilt (10-ms pulse)

Direct	≤2.5%
Via 10X Passive Probe	≤0.25%

Triggering

		Min	Max
Amplitude (p-p)			
Internal	Composite video (nominal)[a]	1.2 div	20 div
	Composite sync	0.5 div	20 div
External	Composite video (nominal)	225 mV	4 V
	Composite sync	75 mV	4 V
Ext/10	Composite video (nominal)	2.25 V	40 V
	Composite sync	750 mV	40 V

Sync Separation — Stable video rejection and sync separation from sync-positive or sync-negative composite video, 405- to 819-line, 50 or 60 Hz field rate, or for closed-circuit systems using up to 1201 lines, 60 Hz field rate.

[a] Peak video ≈ 7/3 sync amplitude.

FURNISHED ACCESSORIES

1 Graticule, NTSC (CCIR System M): −40 to +100 units, with 7.5-unit setup line; horizontal divisions along line zero (see last page of Option 05 information for part number).

1 Graticule, CCIR (CCIR System B): zero to +100 units, 35-unit setup line; horizontal divisions along line 30 (see last page of Option 05 information for part number).

OPERATING INFORMATION

The following instructions and information pertain primarily to the use of the 465B Option 05 oscilloscope in TV applications. Refer to preceding sections of this manual for use and operation of the unmodified instrument.

Installation of Video Graticule

To install a video graticule, loosen (about six turns) the four captive screws holding the crt bezel in place and remove the bezel. Remove the light filter from the two bosses on the bezel and install the desired graticule on these bosses, with the marking on the outside.

NOTE

The extended tab at the bottom of the graticule mates with the slightly wider (bottom) margin of the graticule cover.

The graticule can be moved slightly horizontally to align the external graticule and mask with the crt graticule and viewing area. Reinstall the bezel.

When the video graticule is installed, the 10 horizontal divisions along line zero correspond to the internal graticule divisions, and the TIME/DIV calibration of the

http://manoman.sqhill.com

oscilloscope is correct. However, the vertical divisions represent only proportions of the 100-unit (CCIR) or 140-unit (NTSC) video waveform, and the vertical VOLTS/DIV calibration is inapplicable.

To calibrate for a standard 1 volt (nominal) studio video signal, apply the 300 millivolt CALIBRATOR waveform to the Vertical input and adjust the VOLTS/DIV and VAR controls so that the displayed waveform occupies just 30 units (CCIR graticule) or 42 units (NTSC graticule). This adjustment may be performed with a free-running sweep.

Operation of the Sync Separator

To trigger the 465B on a video signal, perform the following three steps:

1. Set the A TRIGGER COUPLING switch to either TV FIELD or TV LINE.

2. Apply a suitable Composite Sync or Composite Video waveform to the A External Trigger input connector.

NOTE

Composite Sync is combined Vertical and Horizontal sync as a single waveform, but without video (picture) waveforms. Composite Video is the picture waveform complete with Vertical and Horizontal blanking and sync.

For special considerations in Dual Trace modes (ALT and CHOP), refer to Vertical Operating Modes—Special Considerations in this section. For internal triggering, the sync portion of the displayed waveform should be at least 10 units, or 0.5 division on the CCIR graticule; 14 units, or about 0.75 division on the NTSC graticule. For external triggering, the sync portion of the waveform should be at least 75 millivolts in amplitude, or 0.75 volt in the EXT/10 mode. Do not exceed the indicated maximum amplitudes (20 divisions for internal triggering, 40 volts for external triggering), to avoid circuit overloads and partial or complete loss of sync.

3. Select the proper polarity for the video waveform applied. For normal video with sync at the negative peak and positive-going picture information, the A TRIGGER SLOPE switch should be set to minus (−); for inverted video having sync at the positive peaks and peak video (white) at the negative peaks, the SLOPE switch should be set to plus (+). The A TRIGGER SLOPE switch controls an inverting/non-inverting signal preamplifier ahead of the sync separator.

Triggering the Sweep

The output of the Sync Separator is fed directly to the A Sweep Trigger circuit; all that is required for triggering is the proper setting of the A TRIGGER LEVEL control. To trigger the B Sweep from the Line-rate trigger output, perform the following steps:

1. Make sure the A Sweep is running.

NOTE

The B Sweep cannot be operated independently and cannot run more than once per operation of the A Sweep. For Composite line displays, refer to Special Measurements in this section.

2. Set the B TRIGGER SOURCE switch to TV LINE.

3. Set the B TRIGGER LEVEL control for a stable triggered sweep.

Vertical Operating Modes—Special Considerations

DUAL TRACE MODES. For dual trace operation, the Sync Separator input must be taken from Channel 1, Channel 2, or an external source. (When only one trace is displayed, the NORM position of the A TRIGGER SOURCE switch may be used.) The Sync Separator is not capable of correct processing of switched (composite vertical deflection) waveforms present on the NORM bus in the ALT or CHOP modes; it is therefore not possible to obtain stable simultaneous displays of two independent video signals that are not time-related.

SINGLE CHANNEL TRIGGERING. When triggering from Channel 1 or Channel 2, the waveform fed to the Sync Separator is the same (except for positioning) as that displayed on-screen when the channel is turned on. If the VOLTS/DIV VAR control is used to reduce displayed amplitude, the signal to the Sync Separator is also reduced. When the CH 2 INVERT switch is pushed in, the Channel 2 signal to the A TRIGGER SOURCE switch is also inverted. Therefore, in selecting the position of the A TRIGGER SLOPE switch in internal triggering, it is only necessary to note the polarity of the displayed waveform, disregarding its actual polarity as applied to the Vertical INPUT connector. For external triggering, the actual applied polarity will determine the necessary A TRIGGER SLOPE setting.

It is not necessary to display Channel 1 or Channel 2 to obtain CH 1 or CH 2 triggering. Whenever the AC-GND-DC switch for the channel is not in GND, the input amplifier and trigger channel are active, regardless of the selection of VERT MODE push buttons.

http://manoman.sqhill.com

ADD MODE. A single-channel trigger signal amplitude is not affected by the contribution of the other channel to an ADD mode display. When the ADD mode with Channel 2 inverted is used to compare two video waveforms by subtraction, the Channel 1 or Channel 2 signal to the Sync Separator will be adequate for stable triggering providing the individual channel signal (when displayed alone) meets the signal requirements.

When the ADD mode is used to display a signal from two sides of a balanced line, the A TRIGGER SOURCE switch NORM (composite vertical) position may be used if neither channel signal alone is of sufficient amplitude for stable sync separation and triggering.

Typical Operation

In a typical operating mode for the Option 05 instrument, the A Sweep establishes the basic frame and field presentation, and the B Sweep allows detailed observation and measurement of various portions of the video waveform.

To obtain stable displays free of interlace jitter (for systems which have 2:1 interlace), the A TIME/DIV switch should be set to display an odd number of fields, plus a fraction of a field, in the unmagnified display. For 50 and 60 Hz field rates, the 2 millisecond/division setting is usually selected. For some PAL system observations, a setting of 5 milliseconds/division (approximately 2 1/2 field display), with the A TRIGGER HOLDOFF control set to approximately the four o'clock position (additional one-field holdoff), may be desirable to maintain a stable display relationship to the four-field PAL burst-blanking sequence. All detail measurements are then made with B Sweep, using the B DLY'D or ALT Horizontal Display, with the B TRIGGER SOURCE switch set to either STARTS AFTER DELAY (continuously variable B Sweep start point) or to TV LINE (B Sweep starts after the leading edge of the next horizontal sync pulse following the delay interval set by the DELAY TIME POSITION control and the A TIME/DIV switch setting).

Because the leading edge of the sync pulse will not be displayed, the typical B TIME/DIV setting for width measurements on front porch, back porch and horizontal blanking intervals, horizontal sync, serration, and equalizing pulses will be 10 microseconds/division to allow display of two consecutive pulses. Use the X10 Magnifier to display the second pulse at 1 microsecond/division.

For rise and fall time measurements on blanking and sync waveforms, trigger the A or B Sweep directly from the displayed waveform (avoiding the processing delay of the sync separator). This permits viewing the triggering edge at sweep rates from 0.5 to 0.02 microsecond/division.

Selecting an Individual Line

NOTE

For field and line identification systems, refer to Identifying Fields, Frames & Lines in 525/60 and 625/50 TV Systems at the end of Option 05.

The Sync Separator circuit does not differentiate between the two fields of an interlaced frame or among the four fields of the PAL color frame sequence. However, if a 1.5- or 3.5-field basic A Sweep cycle is used, the sweep will remain stably locked to a given display until the signal is interrupted.

ONE FRAME CYCLE. To display an entire vertical blanking interval and locate a specific line (e.g., one of the lines containing a specific VIT waveform), set the A TIME/DIV switch to 2 milliseconds and the B TIME/DIV switch (pull to unlock from A) to 10 microseconds. Use the Horizontal POSITION control to center the second vertical blanking interval to center-screen and press the X10 MAG push button in. This will provide sufficient resolution to identify the field. Adjust the A TRIGGER HOLDOFF as necessary.

If the displayed field is not the desired one, first rotate the A TRIGGER SLOPE control momentarily to the opposite polarity then rotate back again until the start of the desired field is displayed.

Press A INTEN and use the DELAY TIME POSITION control to position the intensified zone (B Sweep) on the desired line. Pressing the B DLY'D button will then display the desired line. Select ALT Horizontal Display to view both A INTEN and B DLY'D traces together.

TWO FRAME CYCLE. If PAL Burst blanking is to be checked, an A Sweep 3.5-field cycle (5 milliseconds/division, with the A TRIGGER HOLDOFF at about four o'clock) is required, using B Sweep (ALT Horizontal Display recommended) to identify fields and lines. At 5 milliseconds/division, only two and a fraction fields will be displayed with a full field covered by the trigger holdoff interval. To put a specific field on-screen in a particular location will typically require several operations of the A TRIGGER SLOPE switch.

Special Measurements

OVERSCANNED DISPLAYS. For various video measurements, it may be desirable to magnify the video waveform vertically beyond the limits of the screen. Under these circumstances, the trigger amplifiers or Sync Separator may be overloaded, blocking out some sync

http://manoman.sqhill.com

pulses in the vicinity of strong video transitions, or losing sync pulses altogether. To avoid overload problems, use external sync or use the other vertical channel to supply a constant amplitude signal to the Sync Separator while the overscanned observations are being made. Note, however, that transient-response aberrations in the main vertical amplifier will be increased when the signal is driven offscreen, becoming relatively serious if the amplifier is driven to saturation and cutoff.

HORIZONTAL SYNC PULSE MEASUREMENTS. Rise and fall times and width of horizontal sync pulses may be measured while using the Sync Separator to determine whether part or all of the lines or groups of lines appear to be abnormal. A bright display of all horizontal sync pulses is obtained when the A TRIGGER COUPLING switch is set to TV LINE.

RF INTERFERENCE. Operation in the vicinity of some FM and TV transmitters may show objectionable amounts of rf signal energy in the display, even when coaxial input connections are used. The front-panel 20 MHz BW LIMIT switch will usually eliminate such interference from the display, but will not affect the signal reaching the Sync Separator. Where the rf interferes with Sync Separator operation, external filters will be required. Use of probes designed for 10 to 30 MHz oscilloscopes will provide 6 to 10 dB attenuation in the 50 to 100 MHz range and may be beneficial in reducing interference.

IDENTIFYING FIELDS, FRAMES, AND LINES IN 525/60 AND 625/50 TV SYSTEMS

NTSC (CCIR System M)

Field 1 is defined as the field whose first equalizing pulse is one full H interval (63.5 microseconds) from the preceding horizontal sync pulse. The Field 1 picture starts with a full line of video. Field 1 lines are numbered 1 through 263, starting with the leading edge of the first equalizing pulse. The first regular horizontal sync pulse after the second equalizing interval is the start of line 10.

Field 2 starts with an equalizing pulse a half-line interval from the preceding horizontal sync pulse. The Field 2 picture starts with a half line of video. Field 2 lines are numbered 1 through 262, starting with the leading edge of the second equalizing pulse. After the second equalizing interval, the first full line is line 9.

CCIR System B and Similar 625/50 Systems (including PAL)

In most 625-line, 50 Hz field-rate systems, identification of parts of the picture relies primarily on continuous line numbering rather than on field-and-line identification, except for PAL systems.

The CCIR frame starts with the first (wide) vertical sync pulse following a field which ends with a half-line of video. The first line after the second equalizing interval is line 6; the first picture line is line 23 (half-line of video). The first field of the frame contains lines 1 through the first half of line 313, the picture ending with a full line of video (line 310).

The second field of the frame commences with the leading edge of the first (wide) vertical sync pulse (middle of line 313), and runs through line 625 (end of equalizing interval). The first full line after the equalizing interval is line 318; the picture starts on line 336 (full line).

The first field is referred to as "odd", the second field as "even". Note that the identification systems for System M and System B are reversed.

In the four-field PAL sequence with Bruch Sequence Color-burst blanking, the fields are identified as follows:

Field 1: Field that follows a field ending in a half-line of video, when preceding field has color burst on the last full line. Field 1 lines are 1 through 312 and half of line 313. Color burst starts on line 7 of Field 1; a half-line of video appears on line 23.

Field 2: Field that follows a field ending in a full line which does not carry color burst. Field 2 lines are the last half of line 313 through line 625. Color burst starts on line 319 (one line without burst following the last equalizing pulse); a full line of video appears at line 336.

Field 3: Field that follows a field ending in a half line when preceding field has no color burst on its last full line. Field 3 lines are 1 through the first half of line 313. Burst starts on line 6 (immediately following the last equalizing pulse); a half-line of video appears on line 23.

Field 4: Field that follows a field ending in a full line carrying color burst. Field 4 lines are the second half of line 313 through line 625. Color burst for Field 4 starts on line 320 (two full lines without burst follow the last equalizing pulse); video starts with a full line on line 336.

http://manoman.sqhill.com

THEORY OF OPERATION

Introduction

This section describes circuitry unique to Option 05. Refer to the Theory of Operation section of this manual for information concerning those portions of the oscilloscope circuitry that are unchanged by Option 05.

Figure 6-3 shows the circuit stages for those circuits added or changed by Option 05. This discussion is limited to a general description of those stages. Refer to the schematic diagrams and component location figures at the end of this Option 05 description for a more detailed examination of individual components.

Switching

The added TV FIELD and TV LINE positions of the A TRIGGER COUPLING switch open the conventional signal path to the A Trigger circuitry. The TV FIELD and TV LINE positions also couple the appropriate output of the Sync Separator stage to the conventional A Trigger Generator circuitry.

The Option 05 TV LINE position on the B TRIGGER SOURCE switch couples line rate trigger signals from the Sync Separator output to the conventional B Trigger Generator circuitry.

With Option 05 the A TRIGGER SLOPE switch adds connections through P2834 to provide inverting or non-inverting control of the Trigger Amplifier and Inverter stage.

Trigger Pickoff

This stage consists of Q7512, a source follower, and Q7514, an emitter follower. The stage provides isolation, impedance match to the Trigger Amplifier and Inverter, and minimum loading to the input signal. Gain of the Trigger Pickoff stage is slightly less than unity. The video trigger signal (internal or external) from the A TRIGGER SOURCE switch is coupled to the input of Q7512, while the output of the Trigger Pickoff stage (Q7514 emitter) is fed through P7575 and P2810 to the Trigger Amplifier and Inverter stages (Q2802, Q2803, and U2810). CR7510 protects the input of Q7512 from damage when high amplitude negative signals are present.

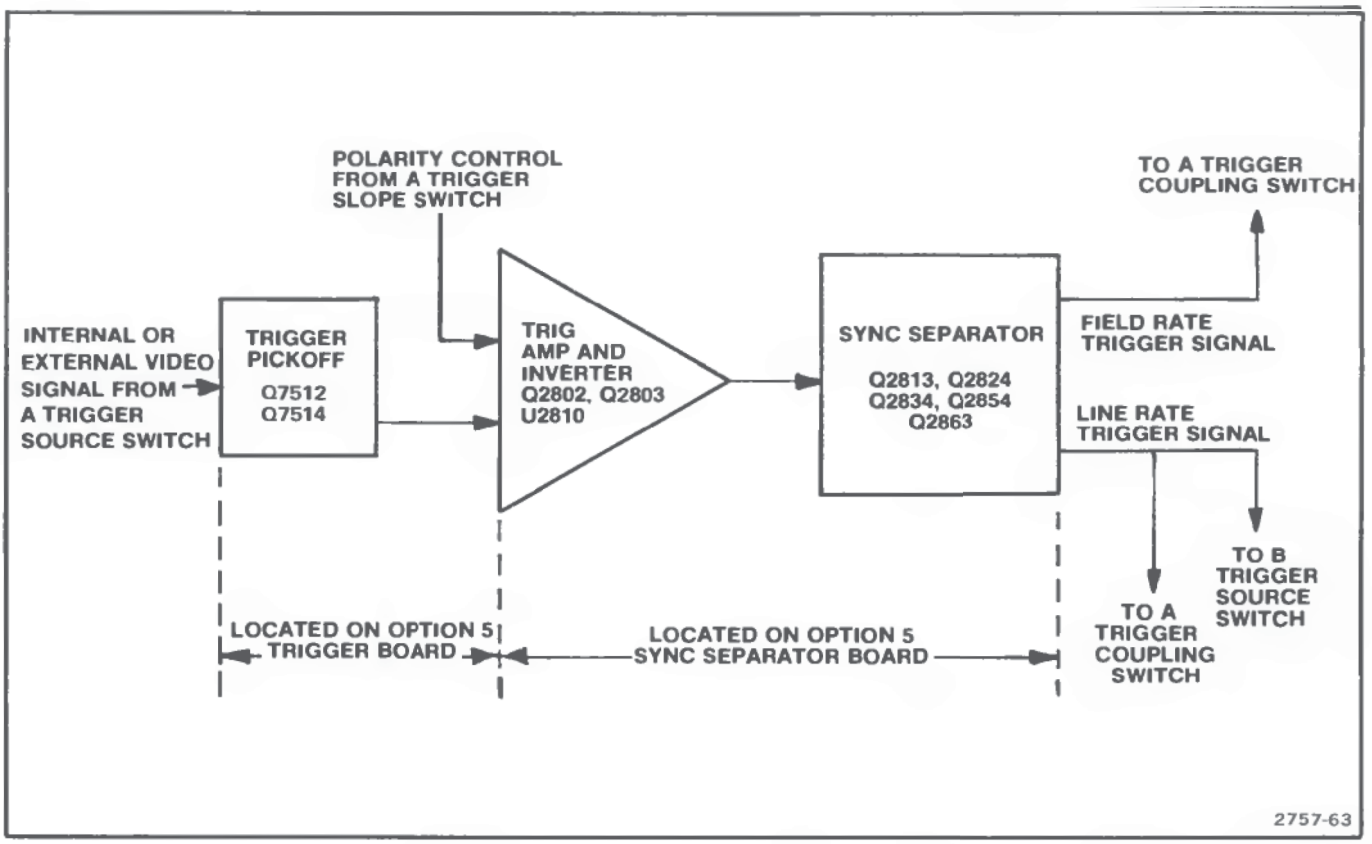

Figure 6-3. Option 05 simplified block diagram.

http://manoman.sqhill.com

Trigger Amplifier and Inverter

This stage consists of Q2802, Q2803, and U2810, and is designed to provide adequate drive and correct polarity for the following Sync Separator stage, which accepts only negative sync (positive-going video). Signal is applied to the Trigger Amplifier and Inverter from the Trigger Pickoff via P2810. Polarity control is applied from the A TRIGGER SLOPE switch through P2834. Output from the stage is fed to Q2813, the Sync Separator input.

When the A TRIGGER SLOPE switch is set to +, this stage inverts the signal it receives from the Trigger Pickoff. If the switch is set to −, the signal is not inverted. Only one transistor, Q2802 or Q2803, conducts at a time. Feedback resistor R2807 controls Operational Amplifier U2810 gain for low amplitude signals, while R2809, CR2807, and CR2809 control the gain for higher amplitude signals.

Sync Separator

The Sync Separator strips off the video (picture) information from the incoming sync-negative video output of U2810, amplifies the resulting composite sync for use as horizontal (TV line) sync by A and B Sweep Triggers, and processes the composite sync to provide vertical (field rate) sync to the A Sweep Trigger circuits.

Video Stripper, Q2813 and Q2824, form a limited-swing feedback amplifier which amplifies only the negative peaks of the incoming waveform. The base of Q2813 rests at an equilibrium point of approximately +9.0 volts, which is affected slightly by Clipping Level adjustment R2826. The emitter of Q2824 is held at approximately +10.1 volts, and the collector rests at approximately +9 volts.

With sync-negative video applied to Q2813, the negative-going peaks (sync) are clamped at the +9 volt level. The positive-going portions of the input waveform generate increasing amounts of feedback current via R2818 until Q2824 reaches its negative-swing limit. Beyond this point, further positive input cuts off Q2813, and has negligible effect on the output. When Q2813 is driven positive, the negative excursion at the collector of Q2824 is stopped at approximately +7.6 volts. By not permitting Q2824 to be cut off when Q2813 is cut off the output to Q2834 is relatively unaffected by input video excursions. The maximum signal swing at the Q2824 collector for any magnitude of input signal above about 100 millivolts p-p is about 2 volts p-p, with active response confined to the most negative parts of the input signal. Divider R2824-R2825-R2826 sets the bias level for Q2824.

Diodes CR2824-CR2825 provide thermal compensation for Q2834, and have no other circuit function. Q2834 provides TV LINE (horizontal) composite sync output to the A and B TRIGGER SOURCE switches to serve as TV LINE sync, and drive to the Vertical Sync Recognizer Q2854-Q2863. In the quiescent state, Q2834 is cut off, its emitter held at +5.1 volts and its base below the turn-on level of +5.7 volts. The collector is at +10.1 volts, and is prevented from rising further above the +9.6 volts supply by CR2828. When negative-going sync pulses arrive at Q2813, they are inverted by Q2824 and provide sufficient base current to saturate Q2834. Q2834 is driven between saturation and cutoff, and generates approximately 4.9 volts p-p of sync signal, attenuated to approximately 0.1 volt, suitable for A and B Sweep triggering, and is ac coupled to the A and B Sweep Trigger circuitry.

The Vertical Sync Recognizer, Q2854 and Q2863, recognizes the various forms of TV Vertical (Field Rate) sync pulses by providing an output signal proportional in amplitude to the duration (width) of a preceding negative-going pulse. The output signal occurs on the trailing edge of the input pulse. In most TV systems using sync-negative video, a vertical sync pulse consists of a train of negative-going pulses about five times wider than horizontal sync pulses, and separated by narrow intervals (serrations) of about the same width as horizontal sync pulses. In these systems, the recognizer produces a train of narrow output pulses, one for each serration of the sync pulse. In some 405/50 and 819/50 broadcast systems and in many closed circuit TV systems, the vertical sync pulse is a single negative-going (sync-negative) pulse having a duration of several full horizontal lines. In these systems, the recognizer puts out a single narrow pulse at the end of the sync pulse.

Q2854 is driven by the Q2834 Sync Amplifier with a 4.9 volt signal, with the negative portion of the signal representing the sync portion of the incoming waveform. In the absence of sync pulses, the collector of Q2834 is high and CR2831 holds the base of Q2834 at about +9.6 volts. When the Q2834 collector steps negative with a sync pulse, Q2834 is cut off and its collector steps positive by about 350 millivolts. The output stage network sets the emitter of Q2863 near +10.2 volts and provides Q2854 with a collector voltage of around +12.2 volts. The 60 microamp collector current of Q2854 (set by approximately 9.0 volts drop across R2856) generates around a 0.35 volt drop in the equivalent 5.5 kilohm collector load. This sets the base voltage of Q2863 at +11.9 volts nominal, ensuring that Q2863 is cut off.

http://manoman.sqhill.com

When Q2854 is cut off, C2856 discharges toward ground on a 30 microsecond time-constant, starting at a rate of about −300 millivolts per microsecond. The Q2854 emitter voltage decreases 0.5 to 2.0 volts for the duration of a 2- to 6-microsecond wide horizontal sync or vertical equalizing pulse. For the longer duration vertical sync pulses, the emitter voltage decreases 4 volts (typical for 819/50 system with serrations) to 5.5 volts (voltage decrease stops when the emitter reaches +4.2 volts since the base is held at +4.7 volts).

When the collector of the Q2834 Sync Amplifier steps positive at the end of the pulse, a negative-going output pulse is generated at the collector of Q2854 that is proportional to the amount of emitter voltage decrease. The exact magnitude of this output pulse is a complex function of the rate of rise of the positive transition from Q2834, the value of C2856, the collector-to-base capacitance of Q2854 (including C2854) and the collector-to-ground capacitance of Q2854. The output pulse at the Q2854 collector is approximately 80% of the amount of voltage decrease.

The positive-going trailing edge of the differentiated Q2854 collector output pulse, which is coupled back to the base by C2854 and the Q2854 collector capacitance, creates an overshoot at the base of Q2854. This drives the base about 1.5 volts above the quiescent level at the end of a vertical sync pulse (this overshoot does not appear on the Q2834 collector bus). The Q2854 collector waveform stays negative during the time the base is being driven positive; when the base stops at the quiescent level, the collector voltage rises rapidly, coupling an apparent overshoot into the base waveform. This condition tends to delay the start of the emitter voltage decrease for vertical serrations following the first one, but is otherwise insignificant.

The output stage bias network, keeping Q2863 cut off in the quiescent state, inhibits the output of Q2854 collector pulses of less than about 2 volts peak (negative) amplitude. The larger pulses corresponding to the trailing edge of vertical sync pulses are large enough to turn on Q2863, and provide output signals of 1 to 2.5 volts at the input end of C2865. Because of the short rise time of the generated pulses, the output stage responds a small amount, even during cutoff, due to base-emitter capacitance in Q2863; this is particularly noticeable when the load is removed.

With the load disconnected, the negative-going output pulses are 2 to 2.5 volts in amplitude (somewhat smaller in 819/50 systems with serrated sync pulses), with a rise time of about 25 nanoseconds and a width of about 150 nanoseconds. Because they are so narrow, with a low repetition rate, they are hard to locate in an oscilloscope display. They are frequently misinterpreted as to their presence or absence, their amplitude, and even polarity (a small trailing-edge overshoot is often mistaken for the pulse itself).

The output stage is diode-connected to limit positive-going peaks in the output. Output coupling capacitor C2865 attenuates the signal, providing a proper level to the A Trigger circuits, to permit correct A TRIGGER LEVEL control action.

ADJUSTMENT PROCEDURE

Introduction

This procedure ensures proper calibration and performance of the TV Sync Separator circuitry included in Option 05, and is based on the 525/60 line and field system. If your Option 05 instrument is calibrated with the equipment prescribed for the 525/60 system, it should perform satisfactorily with other line and field systems.

Before starting this procedure, make sure the rest of your instrument meets all the specifications covered by the Performance Check or Adjustment Procedure in the main portion of this manual. For Option 05 instruments, during the main Performance Check or Adjustment Procedure, use the 24 picofarad Normalizer for vertical attenuator input compensation. Refer to Table 6-1 for complete information on the Normalizer.

Preliminary Procedure for Sync Separator Calibration

1. Refer to the instructions in the main portion of this manual and remove the front cover and cabinet from your Option 05 instrument.

2. Set the controls as stated under Preliminary Control Settings for Option 05 calibration.

3. Connect the Option 05 instrument to a power source within the range of its overall voltage and frequency specifications.

4. Refer to the Performance Temperature Specifications in the Performance Check or Adjustment Procedure in the Specification section of this manual.

5. Allow at least 20 minutes warm-up before proceeding.

http://manoman.sqhill.com

Table 6-1

OPTION 05 TEST EQUIPMENT REQUIRED

Description	Minimum Specifications	Examples
Television Test Signal Generator	Composite Video Output with 525/60 and 1201/60 line and field rate; Output 350 mV to 1 V into 75 Ω termination.	Tektronix Part Number 067-0601-00 Calibration Fixture with 067-5002-00 (525/60) and 067-5010-00 (1201/60) plug-in units.
Test Oscilloscope with 10X Probe	Bandwidth, dc to 20 MHz; minimum deflection factor, 5 mV/division at 20 MHz; Accuracy within 3%.	TEKTRONIX 465B Oscilloscope with included 10X probe.
Termination	Impedance, 75 Ω; connectors, bnc.	Tektronix Part Number 011-0055-00.
Cable, Coaxial (two required)	Impedance, 75 Ω (not critical, 50 Ω may be substituted); length, 42 inches; connectors, bnc.	Tektronix Part Number 012-0074-00.
Input Normalizer	RC Time Constant, 24 pF times 1 MΩ (used during Vertical Input Compensation in main Performance Check and Adjustment Procedure).	Tektronix Part Number 067-0539-00.

Preliminary Control Settings for Option 05 Calibration

(unlisted controls may be left at any position)

Power Controls

Regulating Range Selector	At center of range of available power source.
Line Voltage Selector	As specified for available power source.
POWER	ON (pull)

CRT Controls

INTENSITY	Midrange (for viewable trace)
FOCUS	Midrange (for focused trace)
SCALE ILLUM	Midrange

Vertical Controls

VERT MODE	CH 2
CH 2 VOLTS/DIV	.1 V
CH 2 Input Coupling	AC
INVERT	Out (Normal)
20 MHz BW LIMIT	Full bandwidth (button out)

Sweep Controls

HORIZ DISPLAY	A
A AND B TIME/DIV	20 μs

Triggering Controls

TRIG MODE	AUTO
A LEVEL	11 o'clock
B LEVEL	0 (12 o'clock)
A AND B SLOPE	Minus (−)
A COUPLING	TV FIELD
B COUPLING	AC
A SOURCE	NORM
B SOURCE	TV LINE

Procedure

1. Clipping Level Adjustment (R2826 on Sync Separator Board)

a. Connect the Television Test Signal Generator (with the 525/60 plug-in installed) Composite Video Output to the CH 2 input via a 75 Ω cable and 75 Ω termination.

b. Adjust the Average Picture Level fully counterclockwise and the Composite Video Amplitude for a 3-division display.

http://manoman.sqhill.com

c. Set the CH 2 VOLTS/DIV switch to 0.5 V.

d. Adjust the Average Picture Level control for a 2-division display. Set CH 2 VOLTS/DIV switch to 2 V.

e. Connect a 10X probe from the test oscilloscope (Vertical Volts/Division set for 0.2 V) to TP2865 (see Figure 6-1).

f. Connect the generator rear panel Field Rate Trigger Output through a coaxial cable to the Test Oscilloscope External Trigger input. Set Test Oscilloscope Trigger Source to External, Time/Division to 1.0 ms, and Trigger Level for a stable triggered display.

g. ADJUST—R2826. Starting at the counterclockwise stop, adjust in a clockwise direction until the test oscilloscope display consists of a sequence of 6 narrow—6 wide—6 narrow pulses (for systems other than 525/60 the number and shape of pulses will differ). Adjust until top of displayed pulses are clean and free of any distortion (disregard bottom of pulses). Set Test Oscilloscope Volts/Division to 0.5 V.

h. Set the Option 05 instrument CH 2 VOLTS/DIV switch to 0.5 V, 0.2 V, 0.1 V, and 50 mV and check at each setting for a test oscilloscope display with top and bottom of waveform clean and free of distortion. If any distortion is noted, repeat parts a through h.

i. Set the Option 05 A TRIGGER SLOPE switch to + and depress the INVERT button (in).

j. Repeat part h until no improvement is noted.

k. Replace the Test Signal Generator 525/60 plug-in with the 1201/60 plug-in; set the Option 05 instrument A TRIGGER SLOPE switch to − and release the INVERT button (out). Repeat parts h through j.

l. Disconnect the Test Oscilloscope probe and external trigger cable.

2. A and B Sweep TV Line Trigger Check

a. Replace the Television Test Signal Generator 1201/60 plug-in with the 525/60 plug-in.

b. Set the Option 05 instrument CH 2 VOLTS/DIV switch to 1.0 V, A TIME/DIV switch to 20 μs, and A TRIGGER COUPLING switch to TV LINE.

c. CHECK—that stable TV line triggering can be achieved by adjusting A TRIGGER LEVEL control (disregard field pulses moving through the display).

d. Set the Option 05 instrument A TRIGGER COUPLING switch to TV FIELD. Set A TIME/DIV switch to 2 ms and the B TIME/DIV switch to 0.1 ms. Adjust the A TRIGGER LEVEL control for a stable triggered display.

e. Select ALT Horizontal Display and adjust B TRIGGER LEVEL control for a stable triggered intensified zone and B DLY'D trace. Adjust B INTENSITY and TRACE SEP controls as necessary.

f. Rotate the DELAY TIME POSITION dial to position the start of the intensified portion of the trace just to the left of the second displayed field pulse.

g. Rotate the DELAY TIME POSITION dial and check that a stable display can be obtained for any sync pulse that is positioned on top of the field pulse (intensified zone should jump from one sync pulse to the next as the DELAY TIME POSITION dial is rotated).

h. Disconnect the test equipment, remove the power plug from the power source, and replace the cabinet on the Option 05 instrument.

This completes the Adjustment Procedure and check of the Option 05 portion of the instrument.

http://manoman.sqhill.com

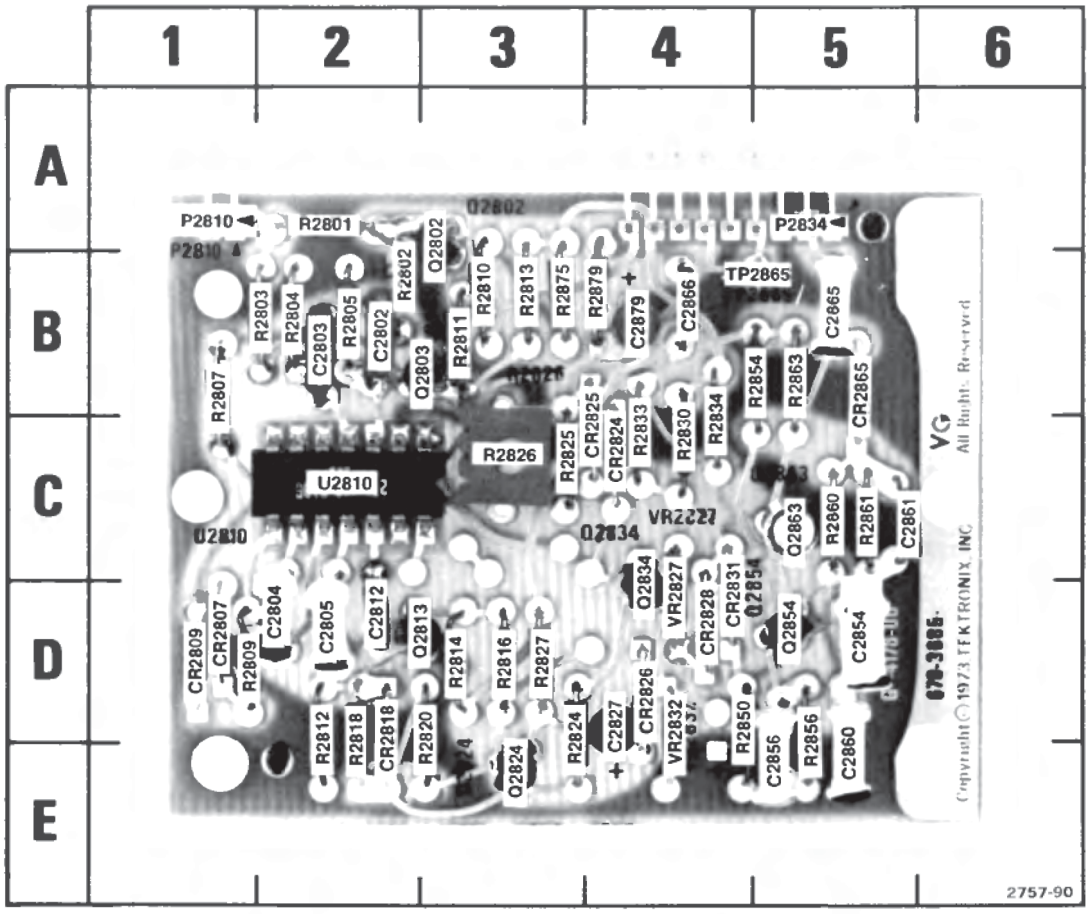

CKT NO	GRID LOC	CKT NO	GRID LOC	CKT NO	GRID LOC	CKT NO	GRID LOC	CKT NO	GRID LOC	CKT NO	GRID LOC	CKT NO	GRID LOC	CKT NO	GRID LOC
C2802	2B	C2861	5C	CR2825	4C	Q2824	3E	R2801	2A	R2812	2E	R2827	3D	R2863	5B
C2803	2B	C2865	5B	CR2826	4D	Q2834	4D	R2802	2B	R2813	3B	R2830	4C	R2875	3B
C2804	2D	C2866	4B	CR2828	4D	Q2854	5D	R2803	2B	R2814	3D	R2833	4C	R2879	4B
C2805	2D	C2879	4B	CR2831	4D	Q2863	5C	R2804	2B	R2816	3D	R2834	4C	TP2865	5B
C2812	2D			CR2865	5B			R2805	2B	R2818	2E	R2850	4D		
C2827	4D	CR2807	1D			P2810	1A	R2807	1B	R2820	3E	R2854	5B	U2810	2C
C2854	5D	CR2809	1D	Q2802	3A	P2834	4A	R2809	1D	R2824	3E	R2856	5E		
C2856	5E	CR2818	2E	Q2803	3B	P2833	4C	R2810	3B	R2825	3C	R2860	5C	VR2827	4D
C2880	5E	CR2824	4C	Q2813	3D	P2863	1A	R2811	3B	R2826	3C	R2861	5C	VR2832	4D

Figure 6-4. A12 TV Sync Separator and Inverter Amplifier board component locations.

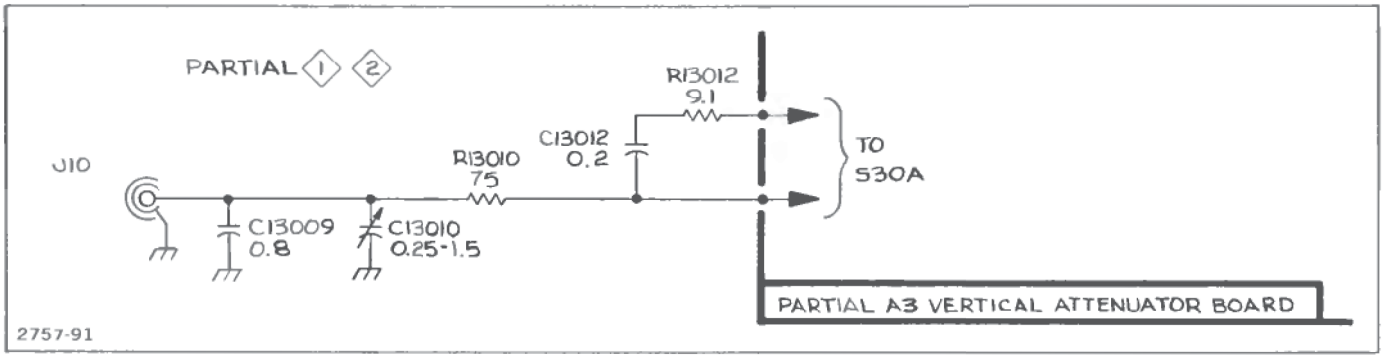

Figure 6-5. Option 05 465B Vertical Input changes.

http://manoman.sqhill.com

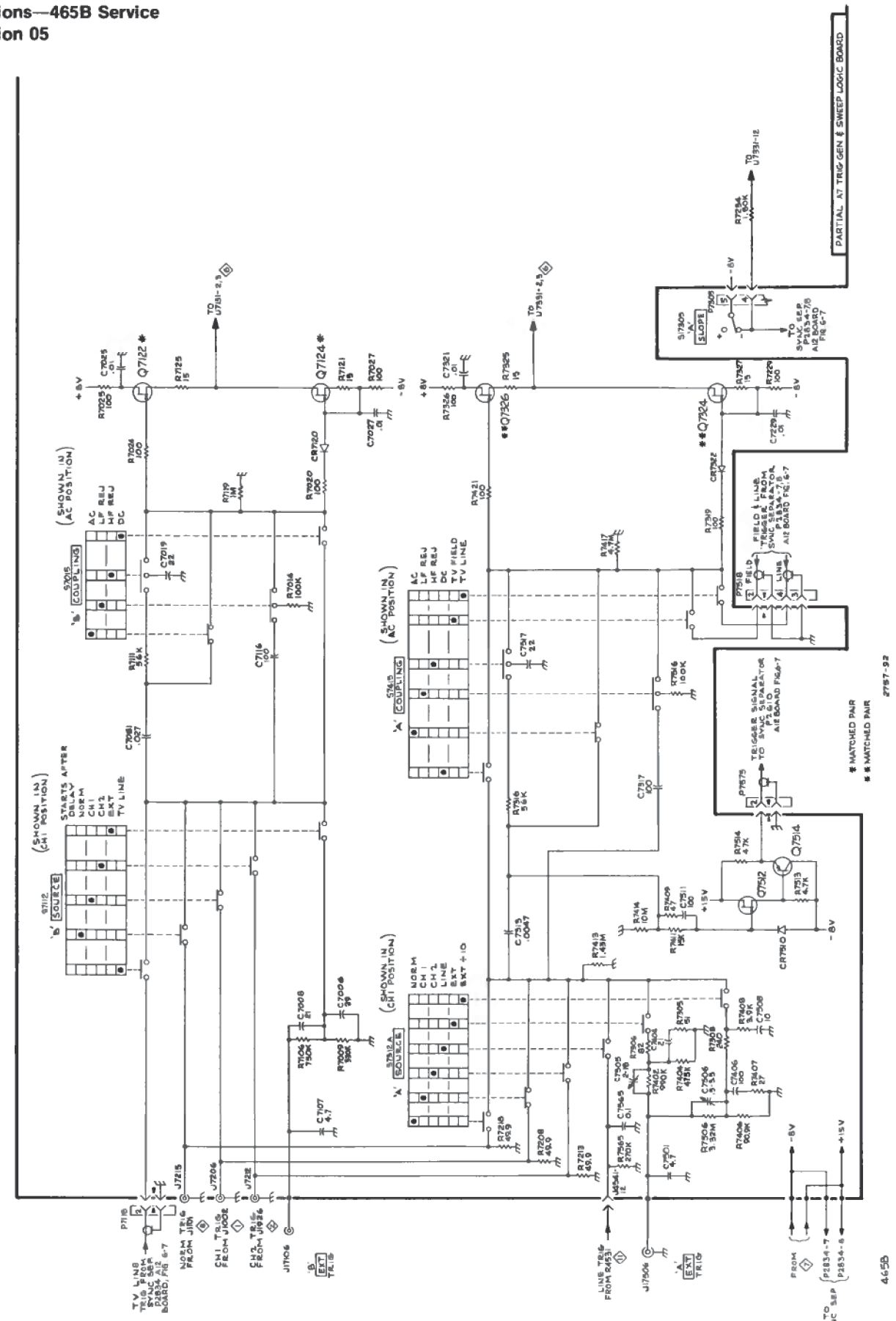

Figure 6-6. Option 05 Trigger Switches and Trigger Pickoff.

http://manoman.sqhill.com

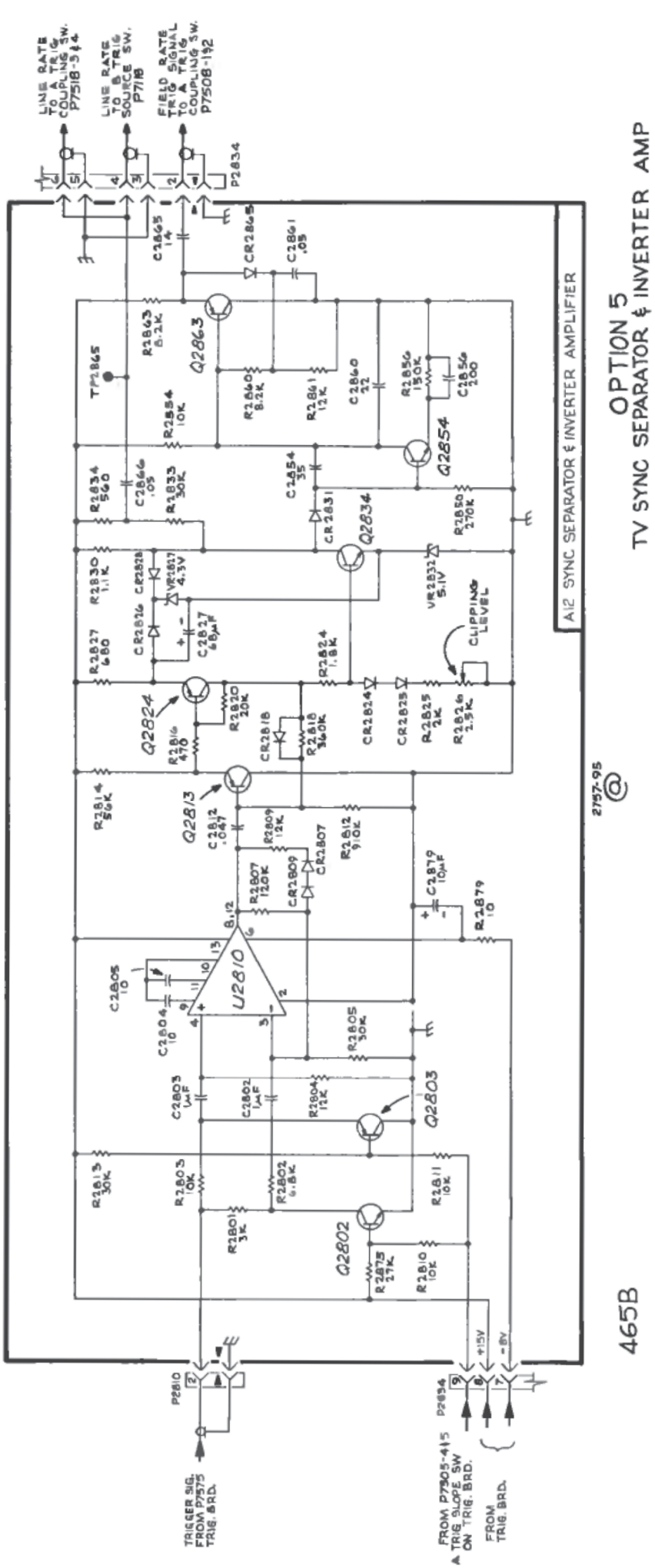

Figure 6-7. Option 05 TV Sync Separator and Inverter Amplifier.

http://manoman.sqhill.com

ELECTRICAL

Component No.	Tektronix Part No.	Serial/Model No. Eff	Dscont	Name & Description	Mfr Code	Mfr Part Number
				CHANGES FROM STANDARD 465B WHEN OPTION 05 IS ADDED		
(CHANGE TO):						
A7	670-6000-01			CKT BOARD ASSY:TRIGGER GEN & SWEEP LOGIC	80009	670-6000-01
A7C7313	281-0772-00			CAP.,FXD,CER DI:0.0047UF,10%,100V	72982	8005H9AADW5R472K
A7R7417	315-0475-00			RES.,FXD,CMPSN:4.7M OHM,5%,0.25W	01121	CB4755
A7S7112	263-0070-00			SW SL ACTR ASSY:A COUPLING,6 OF 6 POSITION	80009	263-0070-00
A7S7415	263-0070-00			SW SL ACTR ASSY:A COUPLING,6 OF 6 POSITION	80009	263-0070-00
(ADD):						
A7C7107	281-0592-00			CAP.,FXD,CER DI:4.7PF,+/-0.5PF,500V	72982	301-023C0H0479D
A7C7501	281-0592-00			CAP.,FXD,CER DI:4.7PF,+/-0.5PF,500V	72982	301-023C0H0479D
A7C7511	281-0814-00			CAP.,FXD,CER DI:100PF,10%,100V	72982	8035D2AADC0G101K
A7CR7510	152-0264-00			SEMICOND DEVICE:ZENER,3W,56V,5%	80009	152-0264-00
A7Q7512	151-1005-00			TRANSISTOR:SILICON,JFE,N-CHANNEL	80009	151-1005-00
A7Q7514	151-0220-03			TRANSISTOR:SILICON,PNP,SEL	80009	151-0220-03
A7R7409	315-0470-00			RES.,FXD,CMPSN:47 OHM,5%,0.25W	01121	CB4705
A7R7411	315-0153-00			RES.,FXD,CMPSN:15K OHM,5%,0.25W	01121	CB1535
A7R7413	321-0496-00			RES.,FXD,FILM:1.43M OHM,1%,0.125W	91637	HFF1813G14303F
A7R7414	315-0106-00			RES.,FXD,CMPSN:10M OHM,5%,0.25W	01121	CB1065
A7R7513	315-0472-00			RES.,FXD,CMPSN:4.7K OHM,5%,0.25W	01121	CB4725
A7R7514	315-0472-00			RES.,FXD,CMPSN:4.7K OHM,5%,0.25W	01121	CB4725
				CHASSIS PARTS		
(CHANGE TO:)						
C13012	285-1055-00			CAP.,FXD,PLSTC:0.2UF,10%,400V	80009	285-1055-00
(ADD):						
C13009	281-0661-00			CAP.,FXD,CER DI:0.8PF,+/-0.1PF,500V	72982	301-000C0K0808B
R13012	307-0116-00			RES.,FXD,CMPSN:9.1 OHM,5%,0.25W	01121	CB91G5
				A12 TV SYNC SEPARATOR		
A12	670-3685-00			CKT BOARD ASSY:TV SYNC SEPARATOR	80009	670-3685-00
A12C2802	283-0059-00			CAP.,FXD,CER DI:1UF,+80-20%,25V	72982	8131N031Z5U0105Z
A12C2803	283-0059-00			CAP.,FXD,CER DI:1UF,+80-20%,25V	72982	8131N031Z5U0105Z
A12C2804	281-0504-00			CAP.,FXD,CER DI:10PF,+/-1PF,500V	72982	301-055C0G0100F
A12C2805	281-0504-00			CAP.,FXD,CER DI:10PF,+/-1PF,500V	72982	301-055C0G0100F
A12C2812	283-0341-00			CAP.,FXD,CER DI:0.047UF,10%,100V	72982	8121N153X7R0473K
A12C2827	290-0530-00			CAP.,FXD,ELCTLT:68UF,20%,6V	90201	TDC686M006NLF
A12C2854	281-0632-00			CAP.,FXD,CER DI:35PF,1%,500V	72982	308-000C0G0350F
A12C2856	281-0605-00			CAP.,FXD,CER DI:200PF,10%,500V	04222	7001-1375
A12C2860	281-0511-00			CAP.,FXD,CER DI:22PF,+/-2.2PF,500V	72982	301-000C0G0220K
A12C2861	283-0010-00			CAP.,FXD,CER DI:0.05UF,+100-20%,50V	56289	273C20
A12C2865	281-0577-00			CAP.,FXD,CER DI:14PF,5%,500V	72982	301-050C0G0140J
A12C2866	283-0010-00			CAP.,FXD,CER DI:0.05UF,+100-20%,50V	56289	273C20

http://manoman.sqhill.com

Component No.	Tektronix Part No.	Serial/Model No. Eff	Dscont	Name & Description	Mfr Code	Mfr Part Number
A12C2879	290-0536-00			CAP.,FXD,ELCTLT:10UF,20%,25V	90201	TDC106M025FL
A12CR2807	152-0141-02			SEMICOND DEVICE:SILICON,30V,50NA	01295	1N4152R
A12CR2809	152-0141-02			SEMICOND DEVICE:SILICON,30V,50NA	01295	1N4152R
A12CR2818	152-0141-02			SEMICOND DEVICE:SILICON,30V,50NA	01295	1N4152R
A12CR2824	152-0141-02			SEMICOND DEVICE:SILICON,30V,50NA	01295	1N4152R
A12CR2825	152-0141-02			SEMICOND DEVICE:SILICON,30V,50NA	01295	1N4152R
A12CR2826	152-0141-02			SEMICOND DEVICE:SILICON,30V,50NA	01295	1N4152R
A12CR2828	152-0141-02			SEMICOND DEVICE:SILICON,30V,50NA	01295	1N4152R
A12CR2831	152-0141-02			SEMICOND DEVICE:SILICON,30V,50NA	01295	1N4152R
A12CR2865	152-0141-02			SEMICOND DEVICE:SILICON,30V,50NA	01295	1N4152R
A12Q2802	151-0190-00			TRANSISTOR:SILICON,NPN	07263	S032677
A12Q2803	151-0220-00			TRANSISTOR:SILICON,PNP	80009	151-0220-00
A12Q2813	151-0188-00			TRANSISTOR:SILICON,PNP	80009	151-0188-00
A12Q2824	151-0188-00			TRANSISTOR:SILICON,PNP	80009	151-0188-00
A12Q2834	151-0192-00			TRANSISTOR:SILICON,NPN,SEL FROM MPS6521	04713	SPS8801
A12Q2854	151-0192-00			TRANSISTOR:SILICON,NPN,SEL FROM MPS6521	04713	SPS8801
A12Q2863	151-0188-00			TRANSISTOR:SILICON,PNP	80009	151-0188-00
A12R2801	315-0302-00			RES.,FXD,CMPSN:3K OHM,5%,0.25W	01121	CB3025
A12R2802	315-0682-00			RES.,FXD,CMPSN:6.8K OHM,5%,0.25W	01121	CB6825
A12R2803	315-0103-00			RES.,FXD,CMPSN:10K OHM,5%,0.25W	01121	CB1035
A12R2804	315-0123-00			RES.,FXD,CMPSN:12K OHM,5%,0.25W	01121	CB1235
A12R2805	315-0303-00			RES.,FXD,CMPSN:30K OHM,5%,0.25W	01121	CB3035
A12R2807	315-0124-00			RES.,FXD,CMPSN:120K OHM,5%,0.25W	01121	CB1245
A12R2809	315-0123-00			RES.,FXD,CMPSN:12K OHM,5%,0.25W	01121	CB1235
A12R2810	315-0103-00			RES.,FXD,CMPSN:10K OHM,5%,0.25W	01121	CB1035
A12R2811	315-0103-00			RES.,FXD,CMPSN:10K OHM,5%,0.25W	01121	CB1035
A12R2812	315-0914-00			RES.,FXD,CMPSN:910K OHM,5%,0.25W	01121	CB9145
A12R2813	315-0303-00			RES.,FXD,CMPSN:30K OHM,5%,0.25W	01121	CB3035
A12R2814	315-0563-00			RES.,FXD,CMPSN:56K OHM,5%,0.25W	01121	CB5635
A12R2816	315-0471-00			RES.,FXD,CMPSN:470 OHM,5%,0.25W	01121	CB4715
A12R2818	315-0364-00			RES.,FXD,CMPSN:360K OHM,5%,0.25W	01121	CB3645
A12R2820	315-0203-00			RES.,FXD,CMPSN:20K OHM,5%,0.25W	01121	CB2035
A12R2824	315-0182-00			RES.,FXD,CMPSN:1.8K OHM,5%,0.25W	01121	CB1825
A12R2825	315-0202-00			RES.,FXD,CMPSN:2K OHM,5%,0.25W	01121	CB2025
A12R2826	311-1226-00			RES.,VAR,NONWIR:2.5K OHM,20%,0.50W	32997	3386F-T04-252
A12R2827	315-0681-00			RES.,FXD,CMPSN:680 OHM,5%,0.25W	01121	CB6815
A12R2830	315-0112-00			RES.,FXD,CMPSN:1.1K OHM,5%,0.25W	01121	CB1125
A12R2833	315-0303-00			RES.,FXD,CMPSN:30K OHM,5%,0.25W	01121	CB3035
A12R2834	315-0561-00			RES.,FXD,CMPSN:560 OHM,5%,0.25W	01121	CB5615
A12R2850	315-0274-00			RES.,FXD,CMPSN:270K OHM,5%,0.25W	01121	CB2745
A12R2854	315-0103-00			RES.,FXD,CMPSN:10K OHM,5%,0.25W	01121	CB1035
A12R2856	315-0154-00			RES.,FXD,CMPSN:150K OHM,5%,0.25W	01121	CB1545
A12R2860	315-0822-00			RES.,FXD,CMPSN:8.2K OHM,5%,0.25W	01121	CB8225
A12R2861	315-0123-00			RES.,FXD,CMPSN:12K OHM,5%,0.25W	01121	CB1235
A12R2863	315-0822-00			RES.,FXD,CMPSN:8.2K OHM,5%,0.25W	01121	CB8225
A12R2875	315-0273-00			RES.,FXD,CMPSN:27K OHM,5%,0.25W	01121	CB2735
A12R2879	315-0100-00			RES.,FXD,CMPSN:10 OHM,5%,0.25W	01121	CB1005
A12U2810	156-0136-00			MICROCIRCUIT,LI:OPNL AMPL	02735	CA3030
A12VR2827	152-0395-00			SEMICOND DEVICE:ZENER,0.4W,4.3V,5%	04713	1N749A
A12VR2832	152-0195-00			SEMICOND DEVICE:ZENER,0.4W,5.1V,5%	80009	152-0195-00

http://manoman.sqhill.com

MECHANICAL

Fig. & Index No.	Tektronix Part No.	Serial/Model No. Eff	Dscont	Qty	1 2 3 4 5	Name & Description	Mfr Code	Mfr Part Number
						CHANGES FROM STANDARD 465B WHEN OPTION 05 IS ADDED		
CHANGE TO:								
	672-0796-00			1		CKT BOARD ASSY:ATTENUATOR	80009	672-0796-00
	333-2524-01			1		PANEL,FRONT:	80009	333-2524-01
A7	670-6000-01			1		CKT BOARD ASSY:TRIGGER GEN & SWEEP LOGIC	80009	670-6000-01
	131-0608-00			8		. TERMINAL,PIN:0.365 L X 0.25 PH,BRZ,GOLD PL	22526	47357
	136-0252-04			6		. SOCKET,PIN TERM:U/W 0.016-0.018 DIA PINS	22526	75060-007
						CHASSIS PARTS		
	337-1762-00			1		SHLD,ELECTRICAL:FAN MOTOR	80009	337-1762-00
	105-0243-00			1		ACTUATOR,SWITCH:AC,DC	80009	105-0243-00
	441-1150-00			1		CHASSIS,SCOPE:SYNC SEPARATOR	80009	441-1150-00
	211-0101-00			4		SCREW,MACHINE:4-40 X 0.25" 100 DEG,FLH STL	83385	OBD
	211-0244-00			4		SCR,ASSEM WSHR:4-40 X 0.312 INCH,PNH STL	78189	OBD
	179-2194-00			1		WIRING HARNESS:OPTION 5	80009	179-2194-00
	198-2318-00			1		WIRE SET,ELEC:	80009	198-2318-00
	131-0707-00			5		. CONNECTOR,TERM.:22-26 AWG,BRS& CU BE GOLD	22526	47439
	175-0828-00			FT		. WIRE,ELECTRICAL:5 WIRE RIBBON	08261	OBD
	352-0163-00			1		. CONN BODY,PL,EL:5 WIRE BLACK	80009	352-0163-00
						STANDARD ACCESSORIES		
	337-1674-02			1		SHLD,IMPLOSION:FILTER MARKED FOR NTSC	80009	337-1674-02
	337-1674-03			1		SHLD,IMPLOSION:FILTER MARKED FOR CCIR	80009	337-1674-03

http://manoman.sqhill.com

OPTION 07
EXTERNAL DC OPERATION

INTRODUCTION

Option 07 is a dc-to-ac inverter that permits Tektronix oscilloscopes to operate on either 12 or 24 volts dc with no performance deterioration. Circuitry is provided to protect against damage due to connection of 24 volts when in the 12-volt mode of operation. The 24-volt external input permits use with marine and aircraft conventional dc power.

Option 07 is an integral part of the oscilloscope. The modified oscilloscope has a three-position voltage input selection slide switch (visible through the right side panel) at the rear of the line voltage selector switch. A dc-input connector is located below the fan cover on the rear panel.

Option 07 is not provided with 465B oscilloscopes equipped with the DM44 Digital Multimeter.

SPECIFICATION

Electrical characteristics and performance requirements listed in the Specification part of this manual are applicable to the 465B Option 07 oscilloscope with the following exceptions or additions:

DC REQUIREMENTS. Either 11.5 to 14 volts or 22 to 28 volts. Operation with 11.5 to 14 volts will not allow use of the graticule lights or Option 05. Operating range may be extended to 15 volts or 30 volts with a series dropping resistor. Maximum elevation for + or − power lead is 50 volts with respect to oscilloscope chassis or ground.

CONTROLS AND CONNECTORS

Mode Switch — Three-position switch located adjacent to the Line Voltage Selector switch on the right side panel and used to select the proper input power to the 465B.

AC — Permits application of ac power to the oscilloscope power switch.

DC 12 — Permits 12-volt operation of the instrument from an external 12-volt source.

DC 24 — Permits 24-volt operation of the instrument from either an external 24-volt power source or from the 1106 Battery Pack, which may be mechanically attached to the oscilloscope.

DC Input Connector — Used for connecting external dc power source to the 465B Option 07; located on rear panel.

OPERATION AND INSPECTION

To operate the 465B Option 07 oscilloscope:

CAUTION

Connect the oscilloscope frame to a ground (earth) reference before using.

1. Set the 465B Line Selector switch and the Option 07 Mode switch to the appropriate positions for the power source to be used. Refer to the following table for proper switch positions.

Power Source	465B Line Selector Switch	Option 07 Mode Switch
115 V ac	115	AC
230 V ac	230	AC
12 V dc	—	DC 12
24 V dc	—	DC 24
Tektronix 1106	—	DC 24

2. The 465B Option 07 oscilloscope may now be operated using the information, instructions, and procedures contained in preceding sections of this manual with the exception of DM44 digital multimeter operation.

THEORY OF OPERATION

Option 07 is a dc-to-ac inverter operating on 12 or 24 volts dc. The operating frequency of the inverter is approximately 400 Hz. The following circuit description is for 24-volt operation unless noted otherwise. Refer to the schematic diagrams (Figures 6-9 and 6-10) throughout the detailed circuit description.

http://manoman.sqhill.com

General Description

The dc source is applied to the Turn-off Level circuit, the Start circuit, and the primary of T14500 (see Figure 6-8). If the dc source is above the level set by Turn-off Level Adjustment R1613, the Turn-off circuit does not operate.

The Start circuit provides a large current surge through T1631 secondary to the bases of Q1652, Q1662, Q1654 and Q1664. This starts the inverter.

The Turn-off circuit is activated in two ways. In 24 V operation, Q1622 is turned on by the source voltage dropping below 22 volts. In 12 V mode of operation, Q1626 is turned on by the accidental application of 24 volts dc.

Turn-Off Level Circuit

For the following description, refer to Figure 6-9.

The voltage reference for the base of Q1606 is set by R1604, VR1604, and VR1605 to approximately 9.1 volts. This establishes the junction of R1607 and the emitters of Q1606 and Q1608 at about 9.7 volts. Power transients that occur whenever the inverter is turned on are prevented from activating the Turn-off circuit by the filtering action of C1605. This filtering action helps hold the 9.1 volt supply base of Q1606 constant and prevents Q1608 from turning on, thereby allowing sufficient time for the power source to recover after providing the initial-start surge.

Source voltages higher than 22 volts dc cause increased current through R1607, Q1606, and R1609. Q1608 is kept cut off by the increased voltage across R1609 and the resulting change across the divider comprised of R1611, R1613, and R1614. This permits no current through R1617. Since R1617 furnishes bias to Q1622, the transistor is cut off. This permits the collector of Q1622 and the rest of the turn-off circuit to rise to a voltage determined by the inverter circuit and the dc source voltage. The collector of Q1622 may be about 24 volts (with respect to −dc) with a 12-volt dc source and about 36 volts with a 24-volt dc source.

If the dc source voltage drops to less than 22 volts, the current through divider R1609, R1611, R1613 and R1614 is decreased. Q1608 conducts, taking current from Q1606, and causing less drop across R1609. This makes Q1608 conduct more, and Q1606 is cut off. Current flow through R1617 turns Q1622 on. Q1622 saturates, dropping its collector voltage to about 0.2 volt. The maximum base current of Q1622 is limited by R1618.

During 12-volt dc operation, there is no current flow through VR1604 and VR1605, since their series rating (about 18 volts) exceeds the applied voltage. The base current of Q1606, through R1605, turns Q1606 on enough to take all the current through R1607, which causes Q1608 to be cut off.

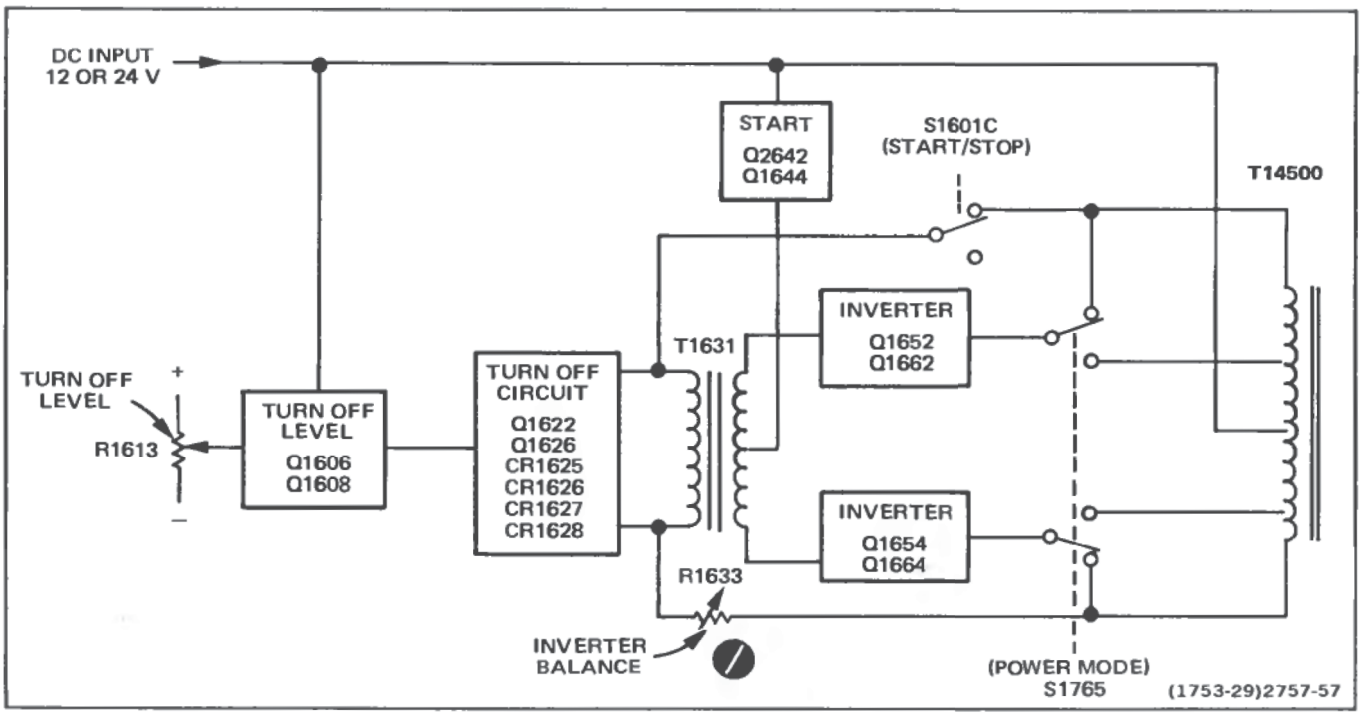

Figure 6-8. Option 07 simplified block diagram.

http://manoman.sqhill.com

Turn-Off Circuit

Q1622 is off under normal operating conditions until the dc source drops below 22 volts and causes Q1622 to conduct. Q1622 does not conduct during 12-volt dc operation, since the Turn-off Level circuit is disabled. CR1625, CR1626, CR1627, and CR1628 form a bridge rectifier. The inverter waveform is rectified to provide operating power for the Turn-off circuit. The inverter spikes are filtered by C1626 to keep them from firing Q1626 (silicon-controlled rectifier). Resistor R1623 prevents C1626 from charging to the peak-to-peak level of the inverter spikes.

When Q1622 is turned on, it saturates. The high current path required for feedback current via CR1625 or CR1626 is provided by C1622. Whenever the inverter is shut down, C1622 discharges through R1622.

If 24 volts dc is accidentally applied when the mode switch is in the 12-volt position, transformer T14500 attempts to produce two times the correct feedback. This is sufficient to cause VR1622 to conduct. VR1622 provides the firing current for silicon-controlled rectifier Q1626. Scr Q1626 fires and shorts out the bridge rectifier and the primary of T1631, stopping the inverter. R1625 prevents Q1626 from being fired by inverter noise. R1624 and C1626 provide holding current for Q1626, keeping it conducting until the surge created by the over-voltage conditions have terminated. Diode CR1624 permits rapid charging of C1626.

Start Circuit

When S1601 is closed, the external dc source is applied to C1614, VR1641, and R1645. The initial surge is coupled to Q1642 through C1614, VR1639, and R1641. Transistor Q1642 saturates until C1614 charges through R1639 to the value determined by VR1639 and the base-emitter junction of Q1642 (about 5.7 volts), then Q1642 is cut off. R1641 limits the base current in Q1642. Zener diode VR1639, once C1614 is charged, makes Q1642 insensitive to input variations. R1642 limits Q1642 collector current. Q1644, R1645, and VR1641 provide a constant current during the time Q1642 is saturated, regardless of the dc source voltage. CR1643 is reverse biased by this starting current. The starting current is applied to the inverter transistors through T1631.

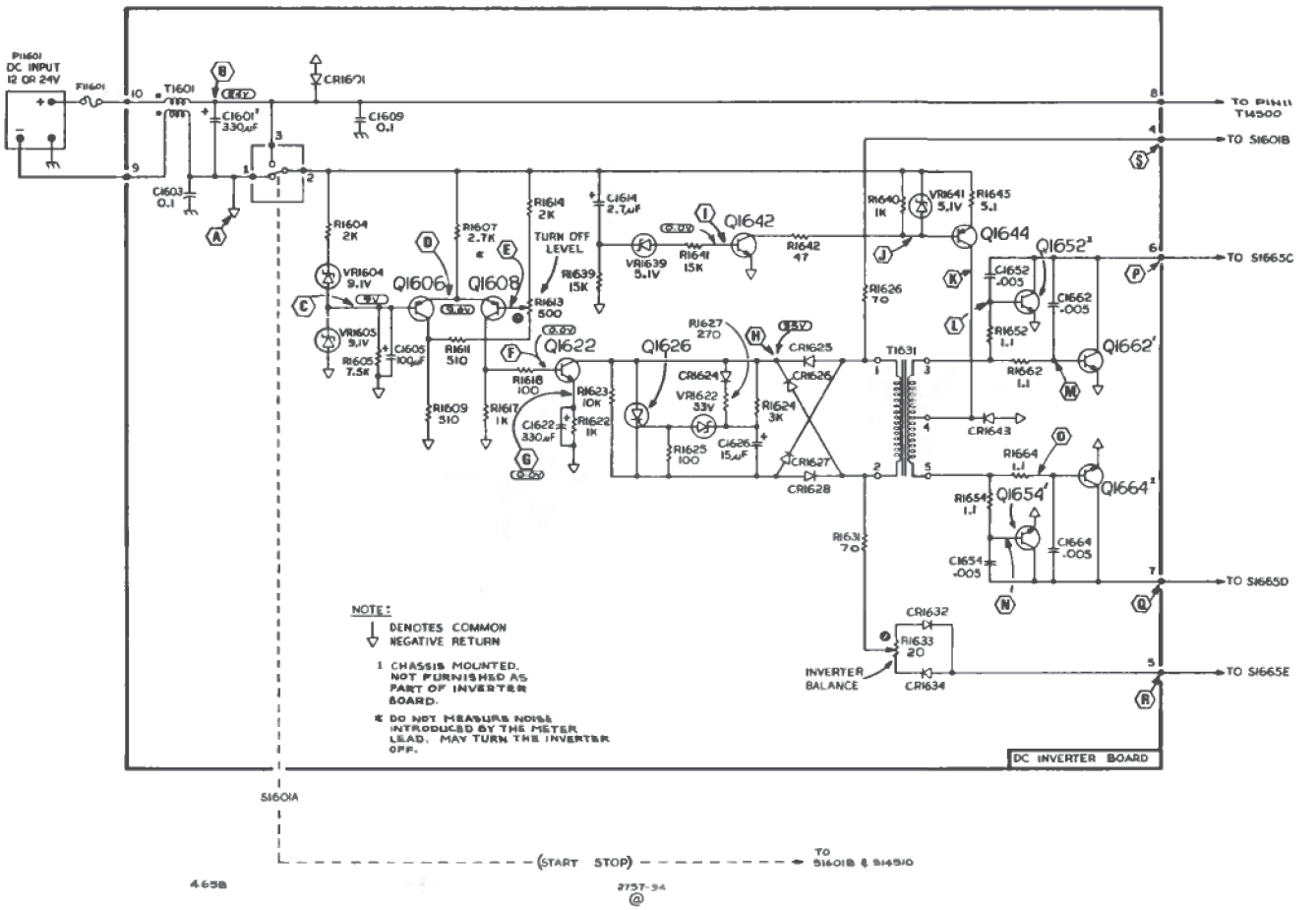

Figure 6-9. 465B Option 07 DC Inverter.

http://manoman.sqhill.com

Inverter Circuit

The starting surge is applied to the bases of Q1652, Q1662, Q1654, and Q1664 through T1631, R1652, R1662, R1654, and R1664. Since the transistors do not have identical parameters, one pair will conduct before the other and will start the inverter. Operating base current is provided through CR1643.

The main frequency-determining components for the inverter are R1626, R1631, and T1631 primary and secondary windings. Four base resistors (R1652, R1662, R1654, and R1664) distribute the drive evenly between the four transistors. C1652, C1662, C1654 and C1664 degenerate the high frequency response and reduce transients.

Feedback to maintain inverter operation is provided from T14500 primary to T1631 primary through R1626, R1631, R1633, CR1632 and CR1634. R1626 and R1631 provide frequency stability and current limiting. R1633, CR1632, and CR1634 compensate for differences in transistors and components. CR1632 and CR1634 conduct during different inverter half-cycles and permit R1633 to balance the drive to T14500.

Capacitors C4503, C4502, C4513, C4517, and C4501 are added to the secondary of T14500 with Option 07 to provide optimum reduction of transients during inverter operation.

DC Input

External power is applied through P11601. Diode CR1601 is normally reverse biased. If the wrong polarity external power is applied, CR1601 becomes forward biased and blows fuse F11601. A low-pass network comprised of T1601, C1601, C1603, and C1609 acts as a filter to reduce transients to the dc source.

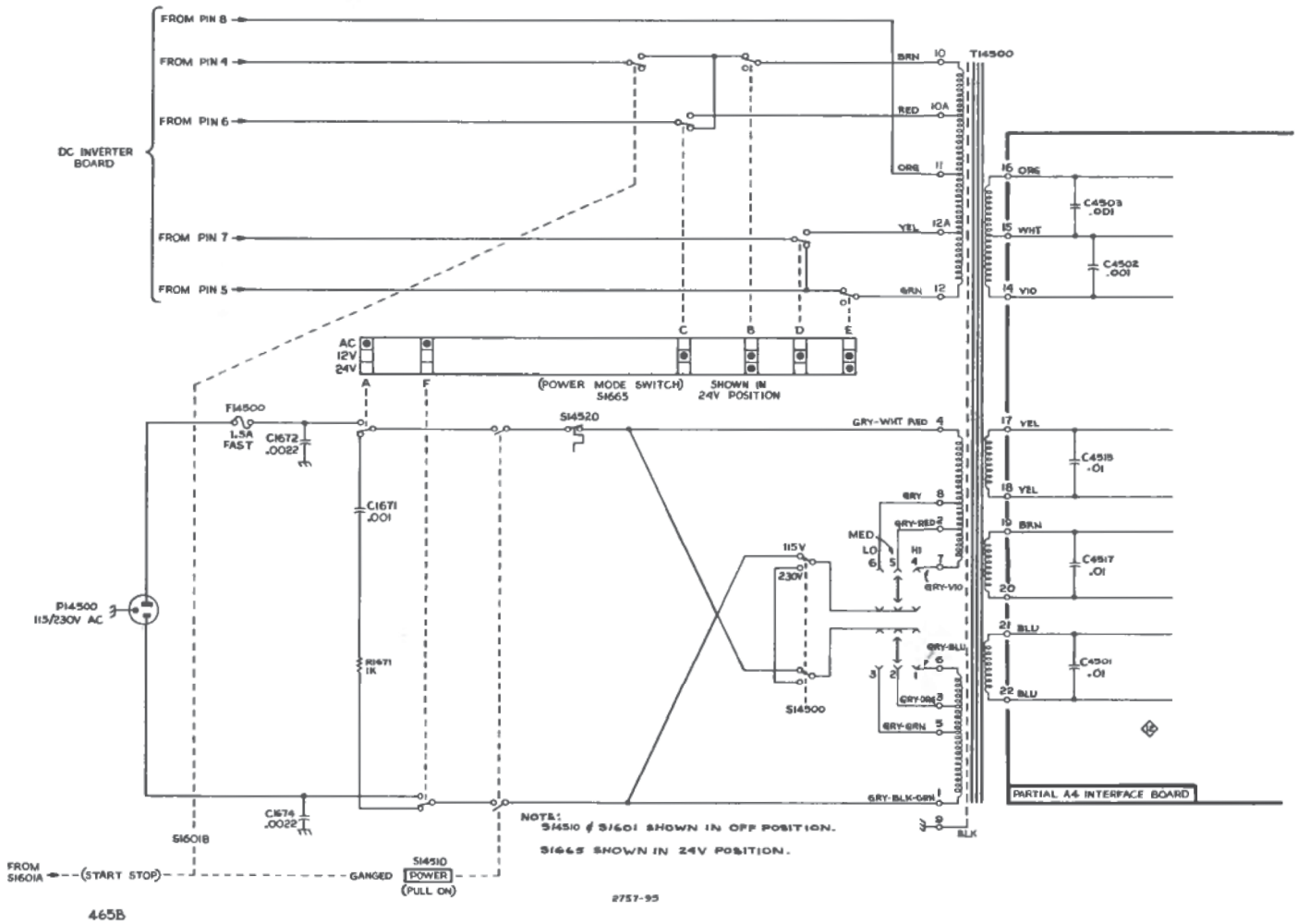

Figure 6-10. 465B Option 07 primary winding.

http://manoman.sqhill.com

Start-Stop Switch

The capacitors in the Turn-Off and Start circuits are discharged by section A of S1601 when the switch is set to the off (stop) position. This ensures the correct time constants when S1601 is changed to the on (start) position. In the start position, the dc input is applied to the inverter circuitry by S1601, section A. At the same time S1601 section B is closed, completing the feedback loop for the inverter transistors. S1601 section B stops the inverter in the off position by opening the feedback loop between T14500 and T1631.

Power-Mode Switch (S1665)

Sections A and F of S1665 connect filter C1671 and R1671 to T14500 during 12-volt or 24-volt operation to reduce converter transients (see Figure 6-10). Sections C and D of S1665 select either transformer terminals 10A and 12A or 10 and 12, to provide the same secondary output when operating on 12 or 24 volts. Sections B and E connect transformer terminals 10 and 12 to S1665 sections C and D and to the inverter feedback circuit during both 12-volt and 24-volt operation.

MAINTENANCE

Obtaining Replacement Parts

STANDARD PARTS. Most electrical and mechanical parts can be obtained through your local Tektronix field office or representative. However, you should be able to obtain many of the standard electronic components from a local commercial source in your area. Before you purchase or order a part from a source other than Tektronix Inc., please check the Electrical Parts list for the proper value, rating, tolerance and description.

SPECIAL PARTS. In addition to the standard electronic components, some special components are used in Option 07. These components are manufactured or selected by Tektronix, Inc. to meet specific performance requirements, or are manufactured for Tektronix in accordance with our specifications. Most of the mechanical parts used in this instrument have been manufactured by Tektronix, Inc. Order all special parts directly from your local Tektronix Field Office or representative.

ORDERING PARTS. When ordering replacement parts from Tektronix, Inc., include the following information:

1. Instrument type.
2. Instrument serial number.
3. A description of the part (if electrical, include the circuit number).
4. Tektronix part number.

Table 6-2

OPTION 07 TEST EQUIPMENT REQUIRED

Description	Minimum Specification	Usage	Examples
DC Voltmeter	22 V to 28 V, 1% accuracy.	Set input voltage.	a. Triplett Model 630-NA b. Simpson Model 262
Test Oscilloscope[a]	Bandwidth, dc to 500 kHz; minimum deflection, 10 mV/division.	Verify inverter balance.	a. TEKTRONIX 212 oscilloscope. b. TEKTRONIX 465B oscilloscope[a].
DC Power Source	22 V to 28 V and 11.5 V to 14 V. Handle starting surge of 4 to 10 A without dropping below 22 V. 12-volt starting surge is approximately 15 A.	Supply operating power for Option 07.	Any variable DC power supply that meets minimum specification.

[a]If the instrument under test and Option 07 are operational and the power source used has a negative ground, the instrument under test may be used as the test oscilloscope.

http://manoman.sqhill.com

Circuit Board Chassis Removal

The Option 07 circuit board is mounted on a small chassis located between the power transformer and the crt shield. To remove the chassis, first remove the two thread-forming screws located at the top of the chassis. Then remove one screw at the bottom right side of the chassis, just below the power transformer.

ADJUSTMENT

Option 07 may be calibrated without removing it from the oscilloscope.

In the following procedures the reference letters (A), (B), etc., refer to points indicated on the schematic diagram (Figure 6-9) and circuit board illustrations.

NOTE

Option 07 is calibrated at the factory using a power supply having the specifications given in Table 6-2, Equipment Required. This permits the most accurate setting of the turn-off volts and inverter balance adjustments. Because this type of power supply may not be available, several alternative possibilities are given. The alternate power supplies have drawbacks, including voltage stability vs. time with high discharge rates. See Figure 6-11.

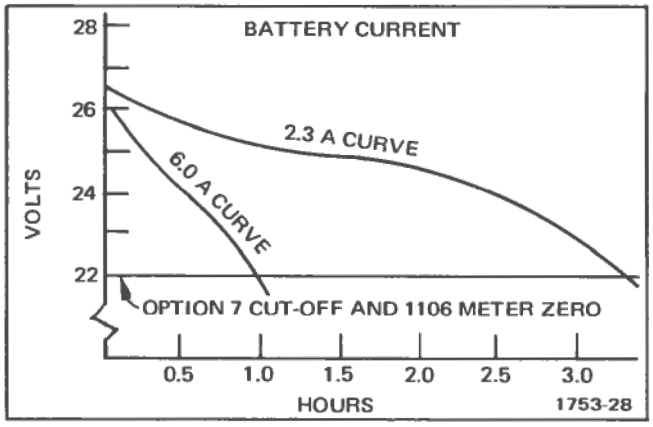

Figure 6-11. Typical battery pack discharge curves.

Power Supply Alternatives

1. Variable power supply with the capabilities given in Table 6-2.

2. Variable power supply with an adequate current rating, in series with the supply alternative in item 4 or item 5.

3. TEKTRONIX 1106 Battery Pack.[1]

4. Two 12-volt wet-cell storage batteries, in series, tapped at 20, 22, or 24 volts.[2]

5. 18 to 23 NiCd cells, 4.0 ampere-hour (D cells) or greater, furnishing 20 to 28 volts.[2]

CAUTION

This procedure is for an external dc source with the negative lead at ground potential (negative ground system).

Operating Range

a. Connect the dc source to the oscilloscope equipped with Option 07. Operate the oscilloscope in the 24 V mode. Connect the voltmeter between fuse F1601 (B) and the common negative return (A). Vary the dc source from 28 volts to 22 volts.

CHECK—that the oscilloscope operates over the voltage range.

b. Change the dc source to 12 volts. Operate the oscilloscope in the 12 V mode. Vary the dc source from 14 volts to 11.5 volts.

CHECK—that the oscilloscope operates over the voltage range.

[1] To set the turn-off level, the battery is charged above the cut-off point (22 V). An oscilloscope is connected and the battery allowed to discharge while its voltage is being monitored. As it reaches 22 V the turn-off point is set to cut off Option 07. The turn-off point on Option 07 approximately coincides with the meter zero on the 1106.

[2] This does not permit accurate adjustment of the turn-off level. NiCd batteries can be used, following the technique used for item 3.

http://manoman.sqhill.com

Inverter Balance

NOTE

If the major oscilloscope use is with a 12-volt source, perform this step while operating the oscilloscope with dc source on 12 volts.

Operate the oscilloscope in the 24 V mode. Set the dc source to 24 volts. Attach the probe ground to the common negative terminal (A) and connect the test oscilloscope probe tip to C1601 (C).

CHECK—that the signal is flat. See Figure 6-12.

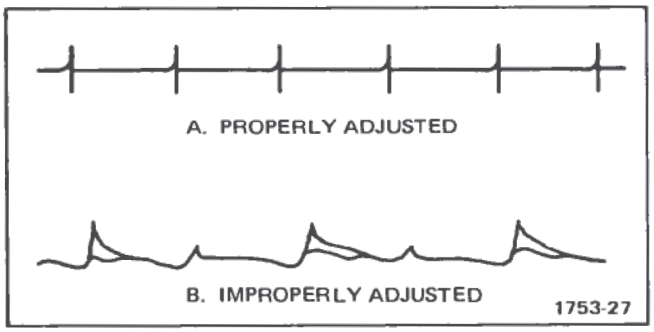

Figure 6-12. Option 07 Inverter balance.

ADJUST—Inverter Balance (R1633) for the flattest signal.

NOTE

There is a slow drift (about a second) after the Inverter Balance adjustment has been moved. This is due to transistor characteristics and will require a slight Inverter Balance readjustment.

A very close approximation of the preceding method can be obtained by setting the Inverter Balance control for the minimum sound coming from the Inverter.

Turn-Off Level

Set the dc source for 21.8 volts.

ADJUST—Turn-off Level (R1613) slowly until Option 07 turns off.

http://manoman.sqhill.com

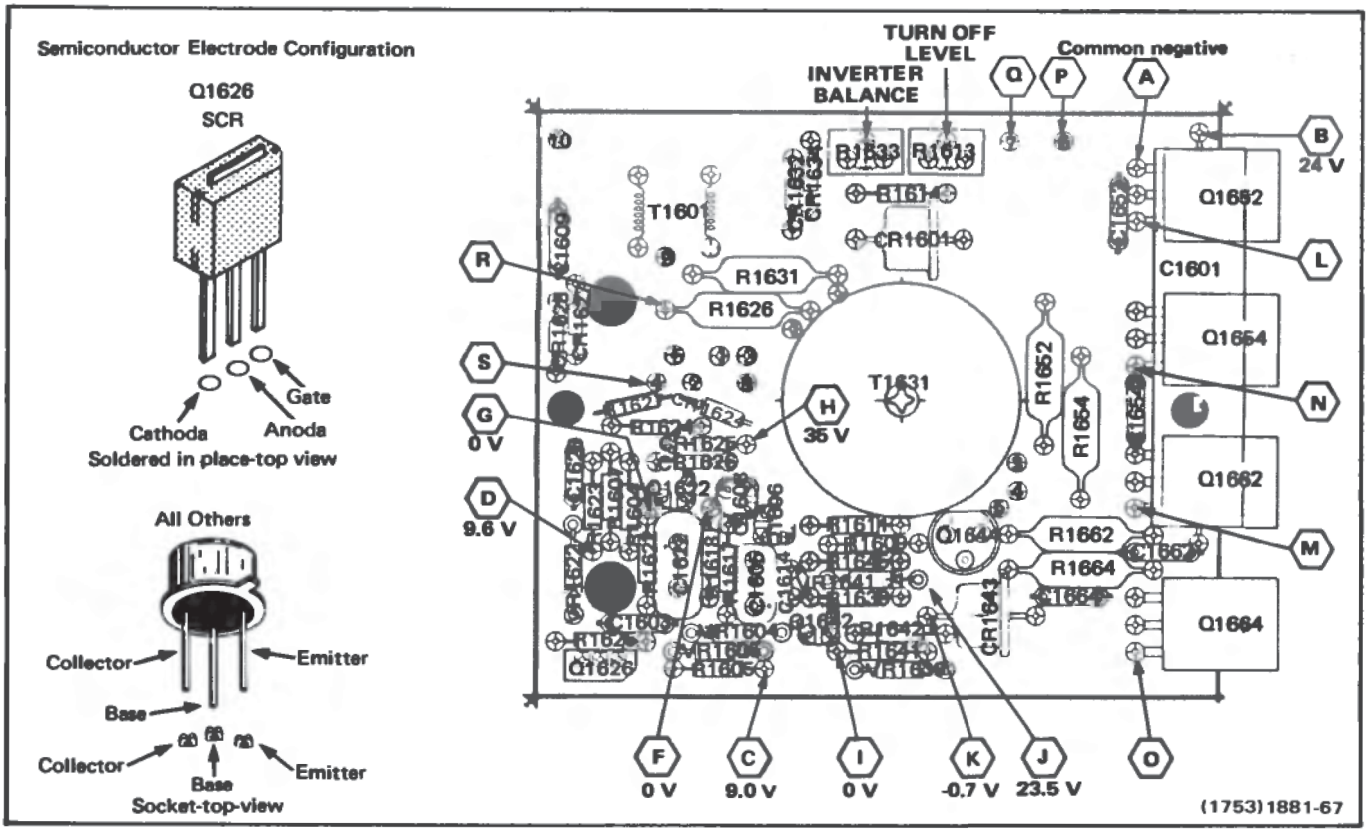

Figure 6-13. Option 07 DC Inverter circuit board adjustment and test point locations.

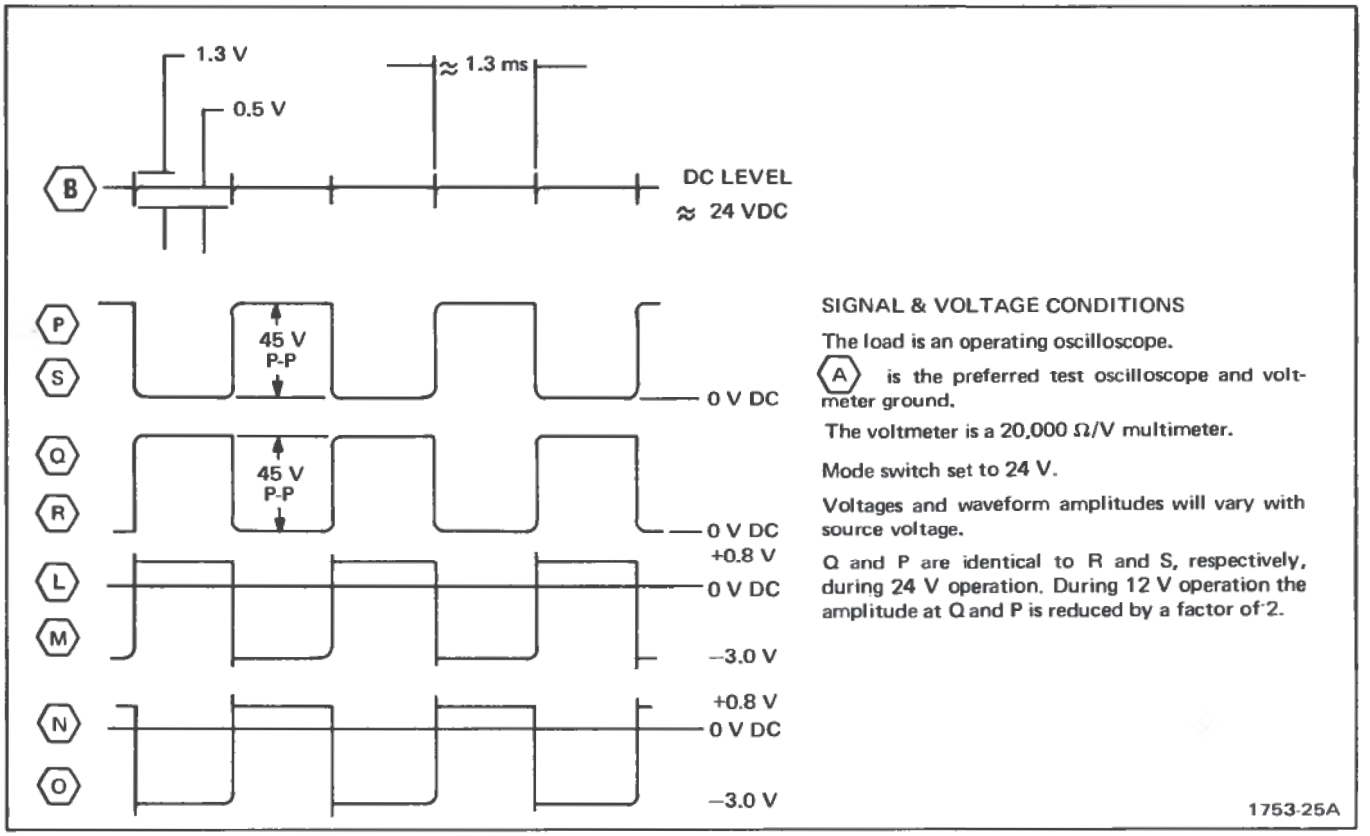

Figure 6-14. Option 07 DC Inverter idealized waveforms.

http://manoman.sqhill.com

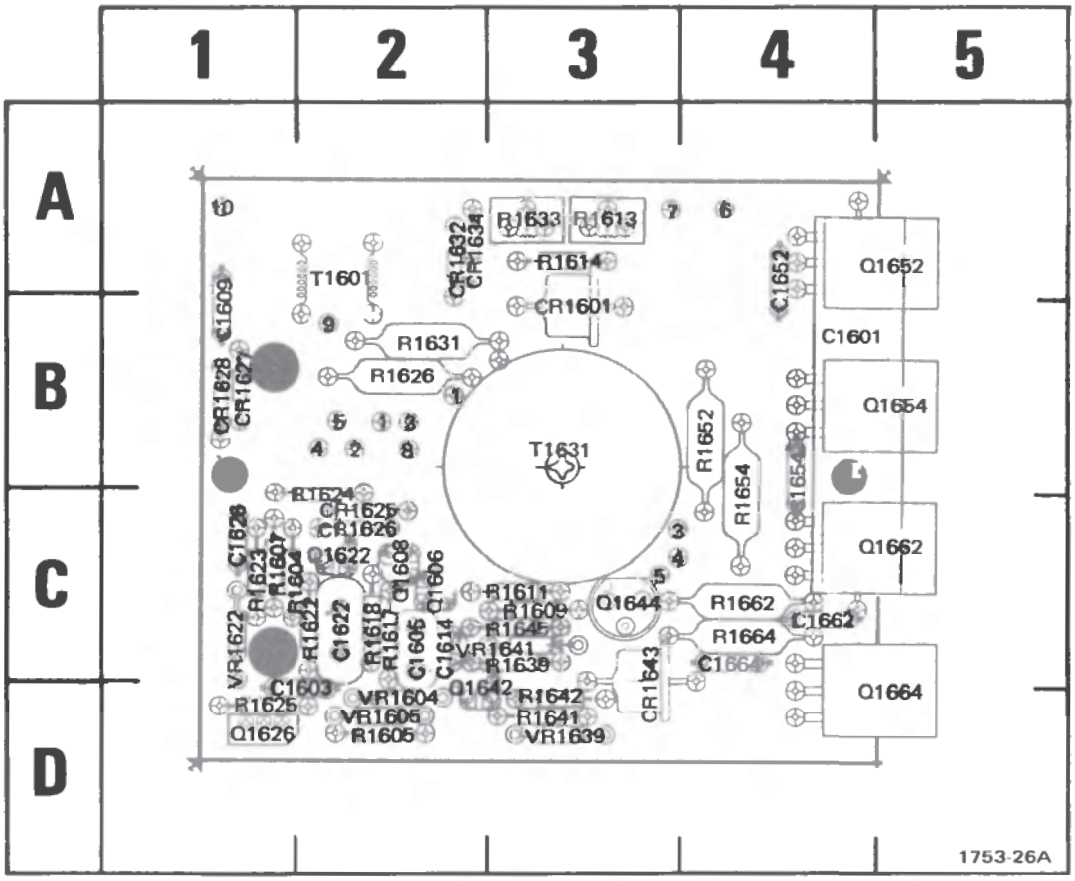

CKT NO	GRID LOC	CKT NO	GRID LOC	CKT NO	GRID LOC	CKT NO	GRID LOC
C1601	4B	CR1628	1B	R1605	2D	R1641	3D
C1603	2D	CR1632	2A	R1607	1C	R1642	3D
C1605	2C	CR1634	2A	R1609	3C	R1645	3C
C1609	1B	CR1643	3D	R1611	3C	R1652	4B
C1614	2C			R1613	3A	R1654	4B
C1622	2C	Q1606	2C	R1614	3A	R1662	4C
C1626	1C	Q1608	2C	R1617	2C	R1664	4C
C1652	4A	Q1622	2C	R1618	2C		
C1654	4B	Q1626	1D	R1622	2C	T1601	2A
C1662	4C	Q1642	2D	R1623	1C	T1631	3B
C1664	4C	Q1644	3C	R1624	2C		
		Q1652	5A	R1625	1D	VR1604	2D
CR1601	3B	Q1654	5B	R1626	2B	VR1605	2D
CR1624	2B	Q1662	5C			VR1622	1C
CR1625	2C	Q1664	5D	R1631	2B	VR1639	3D
CR1626	2C			R1633	3A	VR1641	3C
CR1627	1B	R1604	1C	R1639	3C		

Figure 6-15. Option 07 DC Inverter circuit board component locations.

http://manoman.sqhill.com

ELECTRICAL

Component No.	Tektronix Part No.	Serial/Model No. Eff	Dscont	Name & Description	Mfr Code	Mfr Part Number
				CHANGES FROM STANDARD 465B WHEN OPTION 07 IS ADDED		
(CHANGE TO):						
A4	670-5996-02	B010100	B029999	CKT BOARD ASSY:INTERFACE	80009	670-5996-02
A4	670-5996-05	B030000		CKT BOARD ASSY:INTERFACE	80009	670-5996-05
(ADD):						
A4C4501	283-0003-00			CAP.,FXD,CER DI:0.01UF,+80-20%,150V	72982	855-558Z5U-103Z
A4C4502	283-0000-00			CAP.,FXD,CER DI:0.001UF,+100-0%,500V	72982	831-516E102P
A4C4503	283-0000-00			CAP.,FXD,CER DI:0.001UF,+100-0%,500V	72982	831-516E102P
A4C4513	283-0003-00			CAP.,FXD,CER DI:0.01UF,+80-20%,150V	72982	855-558Z5U-103Z
A4C4517	283-0003-00			CAP.,FXD,CER DI:0.01UF,+80-20%,150V	72982	855-558Z5U-103Z
A4R4262	315-0223-00	XB011250		RES.,FXD,CMPSN:22K OHM,5%,0.25W	01121	CB2235
A14	670-2744-01			CKT BOARD ASSY:INVERTER	80009	670-2744-01
A14C1601	290-0667-00			CAP.,FXD,ELCTLT:330UF,+75-10%,50V	56289	500D158
A14C1603	283-0178-00			CAP.,FXD,CER DI:0.1UF,+80-20%,100V	72982	8131N145651 104Z
A14C1605	290-0531-00			CAP.,FXD,ELCTLT:100UF,20%,10V	90201	TDC107M010WLC
A14C1609	283-0178-00			CAP.,FXD,CER DI:0.1UF,+80-20%,100V	72982	8131N145651 104Z
A14C1614	290-0573-00			CAP.,FXD,ELCTLT:2.7UF,20%,50V	56289	196D275X0050JA1
A14C1622	290-0533-00			CAP.,FXD,ELCTLT:330UF,20%,,6V	90201	TDC337M006WLD
A14C1626	290-0528-00			CAP.,FXD,ELCTLT:15UF,20%,50V	90201	TDC156M050WLC
A14C1652	283-0110-00			CAP.,FXD,CER DI:0.005UF,+80-20%,150V	56289	19C242B
A14C1654	283-0110-00			CAP.,FXD,CER DI:0.005UF,+80-20%,150V	56289	19C242B
A14C1662	283-0110-00			CAP.,FXD,CER DI:0.005UF,+80-20%,150V	56289	19C242B
A14C1664	283-0110-00			CAP.,FXD,CER DI:0.005UF,+80-20%,150V	56289	19C242B
A14CR1601	152-0198-00			SEMICOND DEVICE:SILICON,200V,3A	03508	1N5624
A14CR1624	152-0333-00			SEMICOND DEVICE:SILICON,55V,200MA	80009	152-0333-00
A14CR1625	152-0107-00			SEMICOND DEVICE:SILICON,400V,400MA	80009	152-0107-00
A14CR1626	152-0107-00			SEMICOND DEVICE:SILICON,400V,400MA	80009	152-0107-00
A14CR1627	152-0107-00			SEMICOND DEVICE:SILICON,400V,400MA	80009	152-0107-00
A14CR1628	152-0107-00			SEMICOND DEVICE:SILICON,400V,400MA	80009	152-0107-00
A14CR1632	152-0333-00			SEMICOND DEVICE:SILICON,55V,200MA	80009	152-0333-00
A14CR1634	152-0333-00			SEMICOND DEVICE:SILICON,55V,200MA	80009	152-0333-00
A14CR1643	152-0198-00			SEMICOND DEVICE:SILICON,200V,3A	03508	1N5624
A14Q1606	151-0301-00			TRANSISTOR:SILICON,PNP	04713	2N2907A
A14Q1608	151-0301-00			TRANSISTOR:SILICON,PNP	04713	2N2907A
A14Q1622	151-0302-00			TRANSISTOR:SILICON,NPN	07263	S038487
A14Q1626	151-0506-00			SCR:SILICON	03508	C106B2X283
A14Q1642	151-0302-00			TRANSISTOR:SILICON,NPN	07263	S038487
A14Q1644	151-0335-00			TRANSISTOR:SILICON,PNP	80009	151-0335-00
A14Q1652	151-0436-00			TRANSISTOR:SILICON,NPN	80009	151-0436-00
A14Q1654	151-0436-00			TRANSISTOR:SILICON,NPN	80009	151-0436-00
A14Q1662	151-0436-00			TRANSISTOR:SILICON,NPN	80009	151-0436-00
A14Q1664	151-0436-00			TRANSISTOR:SILICON,NPN	80009	151-0436-00
A14R1604	315-0202-00			RES.,FXD,CMPSN:2K OHM,5%,0.25W	01121	CB2025
A14R1605	315-0752-00			RES.,FXD,CMPSN:7.5K OHM,5%,0.25W	01121	CB7525
A14R1607	315-0272-00			RES.,FXD,CMPSN:2.7K OHM,5%,0.25W	01121	CB2725
A14R1609	315-0511-00			RES.,FXD,CMPSN:510 OHM,5%,0.25W	01121	CB5115
A14R1611	315-0511-00			RES.,FXD,CMPSN:510 OHM,5%,0.25W	01121	CB5115
A14R1613	311-1248-00			RES.,VAR,NONWIR:500 OHM,10%,0.50W	73138	72X-23-0-501K
A14R1614	315-0202-00			RES.,FXD,CMPSN:2K OHM,5%,0.25W	01121	CB2025
A14R1617	315-0102-00			RES.,FXD,CMPSN:1K OHM,5%,0.25W	01121	CB1025

http://manoman.sqhill.com

Component No.	Tektronix Part No.	Serial/Model No. Eff	Dscont	Name & Description	Mfr Code	Mfr Part Number
A14R1622	315-0102-00			RES.,FXD,CMPSN:1K OHM,5%,0.25W	01121	CB1025
A14R1623	315-0103-00			RES.,FXD,CMPSN:10K OHM,5%,0.25W	01121	CB1035
A14R1624	315-0302-00			RES.,FXD,CMPSN:3K OHM,5%,0.25W	01121	CB3025
A14R1625	316-0101-00			RES.,FXD,CMPSN:100 OHM,10%,0.25W	01121	CB1011
A14R1626	308-0450-00			RES.,FXD,WW:70 OHM,1%,3W	91637	RS2B-B70R00F
A14R1627	315-0271-00			RES.,FXD,CMPSN:270 OHM,5%,0.25W	01121	CB2715
A14R1631	308-0450-00			RES.,FXD,WW:70 OHM,1%,3W	91637	RS2B-B70R00F
A14R1633	311-1501-00			RES.,VAR,NONWIR:20 OHM,10%,0.50W	73138	72-37-0
A14R1639	315-0153-00			RES.,FXD,CMPSN:15K OHM,5%,0.25W	01121	CB1535
A14R1640	315-0102-00			RES.,FXD,CMPSN:1K OHM,5%,0.25W	01121	CB1025
A14R1641	315-0153-00			RES.,FXD,CMPSN:15K OHM,5%,0.25W	01121	CB1535
A14R1642	315-0470-00			RES.,FXD,CMPSN:47 OHM,5%,0.25W	01121	CB4705
A14R1645	307-0113-00			RES.,FXD,CMPSN:5.1 OHM,5%,0.25W	01121	CB51G5
A14R1652	308-0459-00			RES.,FXD,WW:1.1 OHM,5%,3W	91637	CW2B-D1R100J
A14R1654	308-0459-00			RES.,FXD,WW:1.1 OHM,5%,3W	91637	CW2B-D1R100J
A14R1662	308-0459-00			RES.,FXD,WW:1.1 OHM,5%,3W	91637	CW2B-D1R100J
A14R1664	308-0459-00			RES.,FXD,WW:1.1 OHM,5%,3W	91637	CW2B-D1R100J
A14T1601	120-0637-00			XFMR,TOROID:5 TURNS BIFILAR	80009	120-0637-00
A14T1631	120-0852-00			XFMR,TOROID:2 WINDINGS	80009	120-0852-00
A14VR1604	152-0306-00			SEMICOND DEVICE:ZENER,0.4W,9.1V,5%	80009	152-0306-00
A14VR1605	152-0306-00			SEMICOND DEVICE:ZENER,0.4W,9.1V,5%	80009	152-0306-00
A14VR1622	152-0241-00			SEMICOND DEVICE:ZENER,0.4W,33V,5%	80009	152-0241-00
A14VR1639	152-0279-00			SEMICOND DEVICE:ZENER,0.4W,5.1V,5%	80009	152-0279-00
A14VR1641	152-0279-00			SEMICOND DEVICE:ZENER,0.4W,5.1V,5%	80009	152-0279-00
				CHASSIS PARTS		
C1671	283-0000-00			CAP.,FXD,CER DI:0.001UF,+100-0%,500V	72982	831-516E102P
C1672	283-0263-00 ----- ----- ----- ----- ----- -----			CAP.,FXD,CER DI:0.0022UF,20%,3000V (MOUNTED ON REAR PANEL. NOT USED WHEN INSTR IS EQUIPPED WITH BOTH OPTION 4 AND OPTION 7)	56289	33C319
C1674	283-0263-00 ----- -----			CAP.,FXD,CER DI:0.0022UF,20%,3000V (SEE FOOTNOTE ON C1672)	56289	33C319
C1681	283-0000-00 ----- -----			CAP.,FXD,CER DI:0.001UF,+100-0%,500V (SEE FOOTNOTE ON C1672)	72982	831-516E102P
C1682	283-0000-00 ----- ----- ----- ----- ----- -----			CAP.,FXD,CER DI:0.001UF,+100-0%,500V (WHEN EQUIPPED WITH BOTH OPTION 4 AND OPTION 7, ONLY ONE SET OF THESE CAPS IS USED)	72982	831-516E102P
C1683	283-0003-00 ----- -----			CAP.,FXD,CER DI:0.01UF,+80-20%,150V (SEE FOOTNOTE ON C1682)	72982	855-558Z5U-103Z
C1684	283-0003-00 ----- -----			CAP.,FXD,CER DI:0.01UF,+80-20%,150V (SEE FOOTNOTE ON C1682)	72982	855-558Z5U-103Z
C1685	283-0003-00 ----- -----			CAP.,FXD,CER DI:0.01UF,+80-20%,150V (SEE FOOTNOTE ON C1682)	72982	855-558Z5U-103Z
F1601	159-0038-00			FUSE,CARTRIDGE:3AG,15A,32V,FAST-BLOW	71400	MDL 15A
P1601	131-1333-00			CONNECTOR,RCPT,:POWER	80009	131-1333-00
R1671	308-0077-00			RES.,FXD,WW:1K OHM,5%,3W	14193	SA301001J
S1601	260-0834-00			SWITCH,TOGGLE:DPDT,5A,125VAC,0.25-40 THD	09353	U21-SHZQE
S1665	105-0479-00			ACTUATOR,SWITCH:SLIDE,INVERTER	80009	105-0479-00
S1665A	260-0760-00			SWITCH,SENS:10A,250V,SPDT,SNAP ACTION	01963	E62-10A
S1665B	260-0760-00			SWITCH,SENS:10A,250V,SPDT,SNAP ACTION	01963	E62-10A
S1665C	260-0760-00			SWITCH,SENS:10A,250V,SPDT,SNAP ACTION	01963	E62-10A
S1665D	260-0760-00			SWITCH,SENS:10A,250V,SPDT,SNAP ACTION	01963	E62-10A
S1665E	260-0760-00			SWITCH,SENS:10A,250V,SPDT,SNAP ACTION	01963	E62-10A
S1665F	260-0760-00			SWITCH,SENS:10A,250V,SPDT,SNAP ACTION	01963	E62-10A

http://manoman.sqhill.com

MECHANICAL

Fig. & Index No.	Tektronix Part No.	Serial/Model No. Eff	Dscont	Qty	1 2 3 4 5	Name & Description	Mfr Code	Mfr Part Number
-1	441-1171-00			1		CHASSIS,SCOPE:INVERTER	80009	441-1171-00
						(ATTACHING PARTS)		
	211-0008-00			2		SCREW,MACHINE:4-40 X 0.25 INCH,PNH STL	83385	OBD
	210-0938-00			2		WASHER,FLAT:0.109 ID X 0.25 INCH OD,STL	75497	AN960-3
						- - - * - - -		
-2	----- -----			1		CKT BOARD ASSY:INVERTER(SEE A14 EPL)		
-3	136-0252-04			15		. SOCKET,PIN TERM:U/W 0.016-0.018 DIA PINS	22526	75060-007
-4	----- -----			1		. XFMR,TOROID:(SEE T1601 EPL)		
						(ATTACHING PARTS)		
-5	343-0443-00			1		. RETAINER,XFMR:	80009	343-0443-00
-6	212-0011-00			1		. SCREW,MACHINE:8-32 X 0.750 INCH,FLH STL	83385	OBD
-7	210-0409-00			1		. NUT,PLAIN,HEX.:8-32 X 0.312 INCH,BRS	73743	3046-402
						- - - * - - -		
						(ATTACHING PARTS FOR CKT BD)		
-8	211-0116-00			2		SCR,ASSEM WSHR:4-40 X 0.312 INCH,PNH BRS	83385	OBD
						- - - * - - -		
-9	----- -----			4		TRANSISTOR:(SEE Q1652,Q1654,Q1662,1664 EPL)		
						(ATTACHING PARTS)		
-10	210-0586-00			3		NUT,PLAIN,EXT W:4-40 X 0.25 INCH,STL	78189	211-041800-00
-11	343-0451-00			1		RETAINER,XSTR:	80009	343-0451-00
-12	342-0195-00			1		INSULATOR,PLATE:0.70 X 3 INCHES LONG	08530	OBD
						- - - * - - -		
-13	348-0141-00			1		GROMMET,PLASTIC:U-SHP,0.625 X0.658 INCH	80009	348-0141-00
-14	348-0055-00			1		GROMMET,PLASTIC:0.25 INCH DIA	80009	348-0055-00
-15	352-0031-00			1		FUSEHOLDER:3AG FUSE	75915	357001
						(ATTACHING PARTS)		
-16	211-0507-00			1		SCREW,MACHINE:6-32 X 0.312 INCH,PNH STL	83385	OBD
-17	210-0006-00			1		WASHER,LOCK:#6 INTL,0.018THK,STL CD PL	78189	1206-00-00-0541C
-18	210-0407-00			1		NUT,PLAIN,HEX.:6-32 X 0.25 INCH,BRS	73743	3038-0228-402
						- - - * - - -		
	342-0228-00			1		INSULATOR,FILM:0.70 X 1.150 INCH LONG	80009	342-0228-00
-19	407-1341-00			1		BRACKET,ELEC SW:ALUMINUM	80009	407-1341-00
						(ATTACHING PARTS)		
-20	211-0101-00			2		SCREW,MACHINE:4-40 X 0.25" 100 DEG,FLH STL	83385	OBD
						- - - * - - -		
-21	105-0479-00			1		ACTUATOR,SWITCH:SLIDE,INVERTER	80009	105-0479-00
-22	260-0760-00			6		SWITCH,SENS:10A,250V,SPDT,SNAP ACTION	01963	E62-10A
						(ATTACHING PARTS)		
-23	211-0212-00			2		SCREW,MACHINE:2-56 X 1.75 INCH,PNH STL	83385	OBD
-24	210-0405-00			1		NUT,PLAIN,HEX.:2-56 X 0.188 INCH,BRS	73743	2X12157-402
						- - - * - - -		
-25	386-2649-00			1		PL,ACTR GUIDE:INVERTER	80009	386-2649-00
	214-1925-00			1		SPRING,SW ACT:POWER SOURCE	80009	214-1925-00
-26	----- -----			1		SWITCH,TOGGLE:(SEE S1665 EPL)		
						(ATTACHING PARTS)		
-27	210-0562-00			1		NUT,PLAIN,HEX.:0.25-40 X 0.312 INCH,BBS	73743	2X20224-402
-28	210-0046-00			1		WASHER,LOCK:INTL,0.26 ID X 0.40" OD,STL	78189	1214-05-00-0541C
						- - - * - - -		
	179-1962-00			1		WIRING HARNESS:VARIABLE RESISTOR	80009	179-1962-00
	348-0005-00			1		GROMMET,RUBBER:0.50 INCH DIA	70485	230
	200-1414-11			1		COVER,SCOPE:REAR	80009	200-1414-11
	131-1333-00			1		CONNECTOR,RCPT,:POWER	80009	131-1333-00
						(ATTACHING PARTS)		
	211-0101-00			2		SCREW,MACHINE:4-40 X 0.25" 100 DEG,FLH STL	83385	OBD
	348-0365-00			4		FOOT,CABINET:PLASTIC,W/LATCH GROOVE	80009	348-0365-00
						- - - * - - -		

http://manoman.sqhill.com

OPTION 07 EXPLODED VIEW

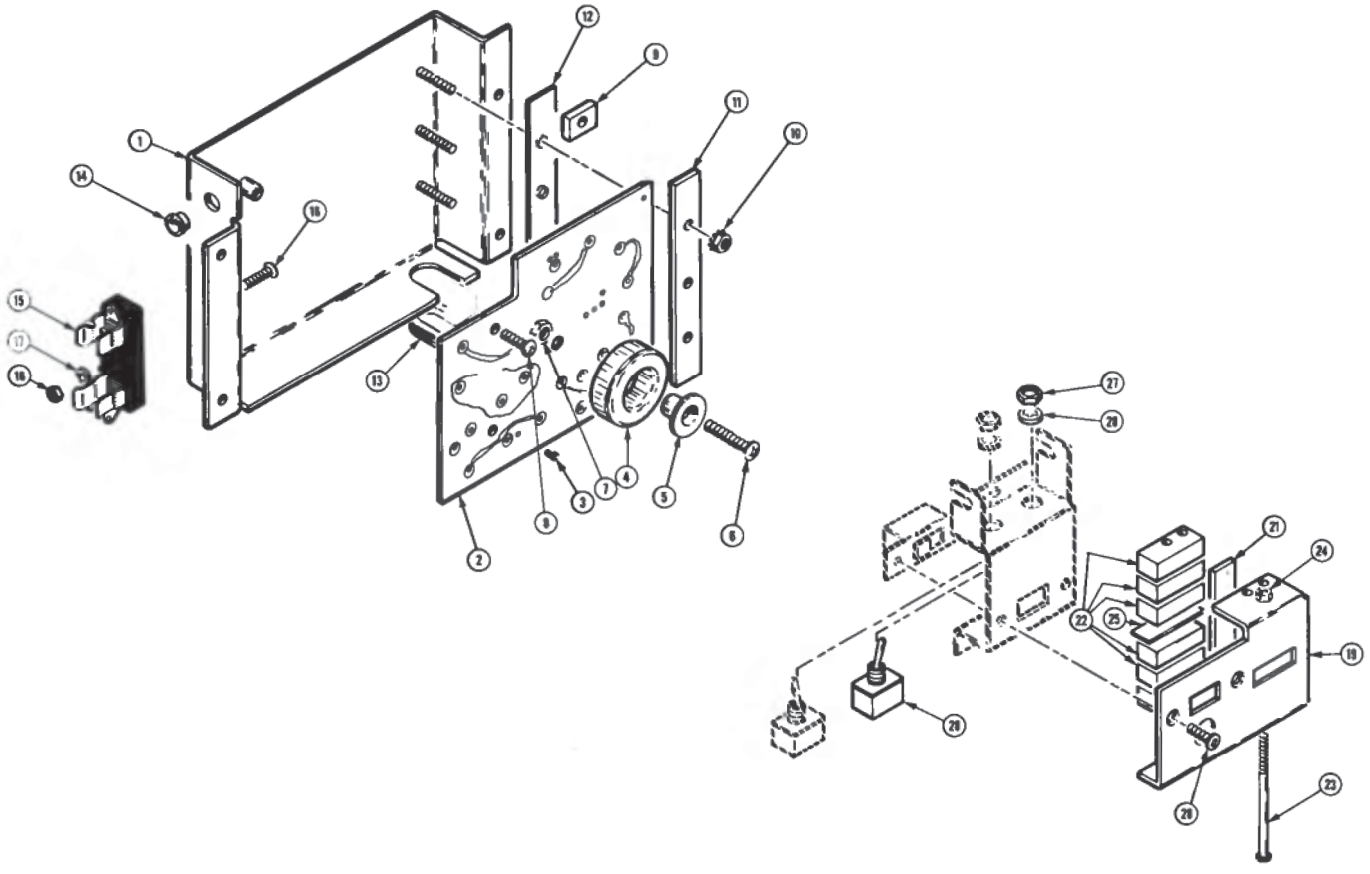

http://manoman.sqhill.com

OPTION 78
TYPE P11 PHOSPHOR

This option adds a Type P11 phosphor crt to the instrument.

If this option is being added to an instrument which is already equipped with a different phosphor, or if the cathode-ray tube requires replacement, use the following procedure:

1. Follow the crt removal and installation procedure in the Maintenance section of this manual.

2. After completing crt installation, check Table 4-6 (Adjustment Interactions), in the Adjustment Procedure of this manual, for calibration adjustments which may require readjustment.

PARTS LIST CHANGES

Delete

V14000	154-0676-15	CRT, P31 Phosphor

Add

V14000	154-0676-19	CRT, P11 Phosphor

http://manoman.sqhill.com

REPLACEABLE ELECTRICAL PARTS

PARTS ORDERING INFORMATION

Replacement parts are available from or through your local Tektronix, Inc. Field Office or representative.

Changes to Tektronix instruments are sometimes made to accommodate improved components as they become available, and to give you the benefit of the latest circuit improvements developed in our engineering department. It is therefore important, when ordering parts, to include the following information in your order: Part number, instrument type or number, serial number, and modification number if applicable.

If a part you have ordered has been replaced with a new or improved part, your local Tektronix, Inc. Field Office or representative will contact you concerning any change in part number.

Change information, if any, is located at the rear of this manual.

LIST OF ASSEMBLIES

A list of assemblies can be found at the beginning of the Electrical Parts List. The assemblies are listed in numerical order. When the complete component number of a part is known, this list will identify the assembly in which the part is located.

CROSS INDEX-MFR. CODE NUMBER TO MANUFACTURER

The Mfr. Code Number to Manufacturer index for the Electrical Parts List is located immediately after this page. The Cross Index provides codes, names and addresses of manufacturers of components listed in the Electrical Parts List.

ABBREVIATIONS

Abbreviations conform to American National Standard Y1.1.

COMPONENT NUMBER (column one of the Electrical Parts List)

A numbering method has been used to identify assemblies, subassemblies and parts. Examples of this numbering method and typical expansions are illustrated by the following:

Example a.



Read: Resistor 1234 of Assembly 23

Example b.

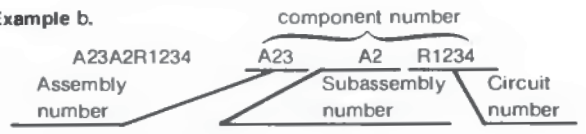

Read: Resistor 1234 of Subassembly 2 of Assembly 23

Only the circuit number will appear on the diagrams and circuit board illustrations. Each diagram and circuit board illustration is clearly marked with the assembly number. Assembly numbers are also marked on the mechanical exploded views located in the Mechanical Parts List. The component number is obtained by adding the assembly number prefix to the circuit number.

The Electrical Parts List is divided and arranged by assemblies in numerical sequence (e.g., assembly A1 with its subassemblies and parts, precedes assembly A2 with its subassemblies and parts).

Chassis-mounted parts have no assembly number prefix and are located at the end of the Electrical Parts List.

TEKTRONIX PART NO. (column two of the Electrical Parts List)

Indicates part number to be used when ordering replacement part from Tektronix.

SERIAL/MODEL NO. (columns three and four of the Electrical Parts List)

Column three (3) indicates the serial number at which the part was first used. Column four (4) indicates the serial number at which the part was removed. No serial number entered indicates part is good for all serial numbers.

NAME & DESCRIPTION (column five of the Electrical Parts List)

In the Parts List, an Item Name is separated from the description by a colon (:). Because of space limitations, an Item Name may sometimes appear as incomplete. For further Item Name identification, the U.S. Federal Cataloging Handbook H6-1 can be utilized where possible.

MFR. CODE (column six of the Electrical Parts List)

Indicates the code number of the actual manufacturer of the part. (Code to name and address cross reference can be found immediately after this page.)

MFR. PART NUMBER (column seven of the Electrical Parts List)

Indicates actual manufacturers part number.

http://manoman.sqhill.com

CROSS INDEX—MFR. CODE NUMBER TO MANUFACTURER

Mfr. Code	Manufacturer	Address	City, State, Zip
00779	AMP, INC.	P O BOX 3608	HARRISBURG, PA 17105
00853	SANGAMO ELECTRIC CO., S. CAROLINA DIV.	P O BOX 128	PICKENS, SC 29671
01121	ALLEN-BRADLEY COMPANY	1201 2ND STREET SOUTH	MILWAUKEE, WI 53204
01295	TEXAS INSTRUMENTS, INC., SEMICONDUCTOR GROUP	P O BOX 5012, 13500 N CENTRAL EXPRESSWAY	DALLAS, TX 75222
01963	CHERRY ELECTRICAL PRODUCTS CORPORATION	3600 SUNSET AVENUE	WAUKEGAN, IL 60085
02111	SPECTROL ELECTRONICS CORPORATION	17070 EAST GALE AVENUE	CITY OF INDUSTRY, CA 91745
02735	RCA CORPORATION, SOLID STATE DIVISION	ROUTE 202	SOMERVILLE, NY 08876
03508	GENERAL ELECTRIC COMPANY, SEMI-CONDUCTOR PRODUCTS DEPARTMENT	ELECTRONICS PARK	SYRACUSE, NY 13201
04222	AVX CERAMICS, DIVISION OF AVX CORP.	P O BOX 867, 19TH AVE. SOUTH	MYRTLE BEACH, SC 29577
04713	MOTOROLA, INC., SEMICONDUCTOR PROD. DIV.	5005 E MCDOWELL RD,PO BOX 20923	PHOENIX, AZ 85036
05397	UNION CARBIDE CORPORATION, MATERIALS SYSTEMS DIVISION	11901 MADISON AVENUE	CLEVELAND, OH 44101
07263	FAIRCHILD SEMICONDUCTOR, A DIV. OF FAIRCHILD CAMERA AND INSTRUMENT CORP.	464 ELLIS STREET	MOUNTAIN VIEW, CA 94042
07716	TRW ELECTRONIC COMPONENTS, IRC FIXED RESISTORS, BURLINGTON DIV.	2850 MT. PLEASANT	BURLINGTON, IA 52601
08806	GENERAL ELECTRIC CO., MINIATURE LAMP PRODUCTS DEPARTMENT	NELA PARK	CLEVELAND, OH 44112
09353	C AND K COMPONENTS, INC.	103 MORSE STREET	WATERTOWN, MA 02172
12697	CLAROSTAT MFG. CO., INC.	LOWER WASHINGTON STREET	DOVER, NH 03820
12954	SIEMENS CORPORATION, COMPONENTS GROUP	8700 E THOMAS RD, P O BOX 1390	SCOTTSDALE, AZ 85252
12969	UNITROOE CORPORATION	580 PLEASANT STREET	WATERTOWN, MA 02172
14193	CAL-R, INC.	1601 OLYMPIC BLVD.	SANTA MONICA, CA 90404
14298	AMERICAN COMPONENTS, INC., AN INSILCO COMPANY	8TH AVE. AT HARRY STREET	CONSHOHOCKEN, PA 19428
14433	ITT SEMICONDUCTORS	3301 ELECTRONICS WAY P O BOX 3049	WEST PALM BEACH, FL 33402
14552	MICRO SEMICONDUCTOR CORP.	2830 F FAIRVIEW ST.	SANTA ANA, CA 92704
15454	RODAN INDUSTRIES, INC.	2905 BLUE STAR ST.	ANAHEIM, CA 92806
16546	U.S. CAPACITOR CORP/CENTRALAB ELECTRONICS DIV.	4561 COLORADO	LOS ANGELES, CA 90039
18324	SIGNETICS CORP.	811 E. ARQUES	SUNNYVALE, CA 94086
24546	CORNING GLASS WORKS, ELECTRONIC COMPONENTS DIVISION	550 HIGH STREET	BRADFORD, PA 16701
25088	SIEMENS CORP.	186 WOOD AVE. S	ISELIN, NJ 08830
27014	NATIONAL SEMICONDUCTOR CORP.	2900 SEMICONDUCTOR DR.	SANTA CLARA, CA 95051
32293	INTERSIL, INC.	10900 N. TANTAU AVE.	CUPERTINO, CA 95014
32997	BOURNS, INC., TRIMPOT PRODUCTS DIV.	1200 COLUMBIA AVE.	RIVERSIDE, CA 92507
34335	ADVANCED MICRO DEVICES	901 THOMPSON PL.	SUNNYVALE, CA 94086
50157	MIDWEST COMPONENTS INC.	P. O. BOX 787 1981 PORT CITY BLVD.	MUSKEGON, MI 49443
50434	HEWLETT-PACKARD COMPANY	640 PAGE MILL ROAD	PALO ALTO, CA 94304
50437	RELIANCE STEEL PRODUCTS COMPANY	3700 WALNUT STREET	MCKEESPORT, PA 15132
52306	HIGH VOLTAGE DEVICES, INC.	7485 AVENUE 304	VISALIA, CA 93277
52763	STETTNER-TRUSH, INC.	67 ALBANY STREET	CAZENOVIA, NY 13035
53184	XCITON CORPORATION	5 HEMLOCK STREET	LATHAM, NY 12110
55210	GETTIG ENG. AND MFG. COMPANY	PO BOX 85, OFF ROUTE 45	SPRING MILLS, PA 16875
55680	NICHICON/AMERICA/CORP.	6435 N PROESEL AVENUE	CHICAGO, IL 60645
56289	SPRAGUE ELECTRIC CO.		NORTH ADAMS, MA 01247
71400	BUSSMAN MFG., DIVISION OF MCGRAW-EDISON CO.	2536 W. UNIVERSITY ST.	ST. LOUIS, MO 63107
71590	CENTRALAB ELECTRONICS, DIV. OF GLOBE-UNION, INC.	P O BOX 858	FORT DODGE, IA 50501
72619	DIALIGHT, DIV. AMPEREX ELECTRONIC	203 HARRISON PLACE	BROOKLYN, NY 11237
72982	ERIE TECHNOLOGICAL PRODUCTS, INC.	644 W. 12TH ST.	ERIE, PA 16512
73138	BECKMAN INSTRUMENTS, INC., HELIPOT DIV.	2500 HARBOR BLVD.	FULLERTON, CA 92634
73899	JFD ELECTRONICS COMPONENTS CORP.	PINETREE ROAD	OXFORD, NC 27565
74276	SIGNALITE DIV., GENERAL INSTRUMENT CORP.	1933 HECK AVE.	NEPTUNE, NJ 07753
74970	JOHNSON, E. F., CO.	299 10TH AVE. S. W.	WASECA, MN 56093
75042	TRW ELECTRONIC COMPONENTS, IRC FIXED RESISTORS, PHILADELPHIA DIVISION	401 N. BROAD ST.	PHILADELPHIA, PA 19108
76493	BELL INDUSTRIES, INC., MILLER, J. W., DIV.	19070 REYES AVE., P O BOX 5825	COMPTON, CA 90224
80009	TEKTRONIX, INC.	P O BOX 500	BEAVERTON, OR 97077
80031	ELECTRA-MIDLAND CORP., MEPCO DIV.	22 COLUMBIA ROAD	MORRISTOWN, NJ 07960

http://manoman.sqhill.com

CROSS INDEX—MFR. CODE NUMBER TO MANUFACTURER

Mfr. Code	Manufacturer	Address	City, State, Zip
82389	SWITCHCRAFT, INC.	5555 N. ELSTON AVE.	CHICAGO, IL 60630
90201	MALLORY CAPACITOR CO., DIV. OF P. R. MALLORY AND CO., INC.	3029 E. WASHINGTON STREET P. O. BOX 372	INDIANAPOLIS, IN 46206
91637	DALE ELECTRONICS, INC.	P. O. BOX 609	COLUMBUS, NE 68601
93410	ESSEX INTERNATIONAL, INC., CONTROLS DIV. LEXINGTON PLANT	P. O. BOX 1007	MANSFIELD, OH 44903

http://manoman.sqhill.com

Component No.	Tektronix Part No.	Serial/Model No. Eff	Dscont	Name & Description	Mfr Code	Mfr Part Number
A1	670-5997-00	B010100	B045774	CKT BOARD ASSY:VERTICAL PREAMP	80009	670-5997-00
A1	670-5997-01	B045775		CKT BOARD ASSY:VERTICAL PREAMP	80009	670-5997-01
A2	670-5999-00	B010100	B029999	CKT BOARD ASSY:VERTICAL OUTPUT	80009	670-5999-00
A2	670-6385-00	B030000		CKT BOARD ASSY:VERTICAL OUTPUT	80009	670-6385-00
A3	670-6003-00			CKT BOARD ASSY:ATTENUATOR	80009	670-6003-00
A4	670-5996-00	B010100	B029999	CKT BOARD ASSY:INTERFACE	80009	670-5996-00
A4	670-5996-03	B030000		CKT BOARD ASSY:INTERFACE	80009	670-5996-03
	----- -----			(SEE OPTION SECTION FOR OPT 4 & OPT 7)		
A5	670-5998-00			CKT BOARD ASSY:VERTICAL MODE SWITCH	80009	670-5998-00
A6	670-6001-00			CKT BOARD ASSY:TIMING	80009	670-6001-00
A7	670-6000-00			CKT BOARD ASSY:TRIGGER GEN & SWEEP LOGIC	80009	670-6000-00
A8	670-6002-01			CKT BOARD ASSY:FAN MOTOR	80009	670-6002-01
A9	670-6004-00			CKT BOARD ASSY:PROBE CODING	80009	670-6004-00
A10	670-2279-00			CKT BOARD ASSY:CRT SCALE ILLUMINATION	80009	670-2279-00
A1	----- -----			CKT BOARD ASSY:VERTICAL PREAMP		
A1C1016	281-0763-00	XB022260		CAP.,FXD,CER DI:47PF,10%,100V	72982	8035D9AADC1G470K
A1C1026	281-0815-00			CAP.,FXD,CER DI:0.027UF,20%,50V	72982	8005D9AABW5R273M
A1C1037	281-0815-00			CAP.,FXD,CER DI:0.027UF,20%,50V	72982	8005D9AABW5R273M
A1C1048	281-0812-00			CAP.,FXD,CER DI:1000PF,10%,100V	72982	8035D9AADX7R102K
A1C1071	281-0813-00			CAP.,FXD CER DI:0.047UF,20%,50V	04222	GC705-E-473M
A1C1072	281-0786-00			CAP.,FXD,CER OI:150PF,10%,100V	72982	8035D2AADX5P151K
A1C1075	281-0773-00			CAP.,FXD,CER OI:0.01UF,10%,100V	72982	8005H9AADW5R103K
A1C1091	281-0773-00			CAP.,FXD,CER DI:0.01UF,10%,100V	72982	8005H9AADW5R103K
A1C1095	281-0815-00			CAP.,FXD,CER DI:0.027UF,20%,50V	72982	8005D9AABW5R273K
A1C1112	281-0798-00			CAP.,FXD,CER DI:51PF,1%,100V	04222	MC101A510G
A1C1119	290-0517-00			CAP.,FXD,ELCTLT:6.8UF,20%,35V	56289	196D685X0035KA1
A1C1135	290-0517-00			CAP.,FXD,ELCTLT:6.8UF,20%,35V	56289	196D685X0035KA1
A1C1142	281-0823-00			CAP.,FXD,CER DI:470PF,10%,50V	12969	CGB471KDN
A1C1144	281-0763-00	B010100	B010239	CAP.,FXD,CER DI:47PF,10%,100V	72982	8035D9AADC1G470K
A1C1144	281-0819-00	B010240		CAP.,FXD,CER DI:33PF,5%,50V	72982	8035BC0G330J
A1C1152	281-0809-00			CAP.,FXD,CER DI:200PF,5%,100V	72982	8013T2ADDC1G201J
A1C1173	283-0114-00			CAP.,FXD,CER DI:0.0015UF,5%,200V	72982	805-509B152J
A1C1192	281-0205-00			CAP.,VAR,PLSTC:4-65PF,100V	80031	2810C5R565QJ02F0
A1C1287	281-0815-00			CAP.,FXD,CER DI:0.027UF,20%,50V	72982	8005D9AA8W5R273M
A1C1306	281-0579-00			CAP.,FXD,CER DI:21PF,5%,500V	72982	301-050C0G0210J
A1C1334	281-0773-00			CAP.,FXD,CER DI:0.01UF,10%,100V	72982	8005H9AADW5R103K
A1C1342	281-0204-00			CAP.,VAR,PLSTC:2-22PF,100V	80031	287C00222MJ02
A1C1353	281-0809-00			CAP.,FXD,CER DI:200PF,5%,100V	72982	8013T2ADDC1G201J
A1C1384	281-0815-00			CAP.,FXD,CER DI:0.027UF,20%,50V	72982	8005D9AABW5R273M
A1C1385	281-0815-00			CAP.,FXD,CER DI:0.027UF,20%,50V	72982	8005D9AABW5R273M
A1C1396	290-0517-00			CAP.,FXD,ELCTLT:6.8UF,20%,35V	56289	196D685X0035KA1
A1C1398	281-0547-00	B010100	B038899	CAP.,FXD,CER DI:2.7PF,10%,500V	72982	301-000C0J0279C
A1C1398	281-0547-00	B038900		CAP.,FXD,CER DI:2.7PF,10%,500V	72982	301-000C0J0279C
	----- -----			(NOMINAL VALUE,SELECTED)		
A1C1405	281-0589-00			CAP.,FXD,CER DI:170PF,5%,500V	72982	301000Z5D0171J
A1C1422	281-0823-00			CAP.,FXD,CER DI:470PF,10%,50V	12969	CGB471KDN
A1C1462	290-0517-00			CAP.,FXD,ELCTLT:6.8UF,20%,35V	56289	196D685X0035KA1
A1C1464	290-0517-00			CAP.,FXD,ELCTLT:6.8UF,20%,35V	56289	1960685X0035KA1
A1C1466	290-0517-00			CAP.,FXD,ELCTLT:6.8UF,20%,35V	56289	196D685X0035KA1
A1C1502	281-0773-00			CAP.,FXD,CER DI:0.01UF,10%,100V	72982	8005H9AADW5K1U3K
A1C1517	281-0773-00			CAP.,FXD,CER DI:0.01UF,10%,100V	72982	8005H9AADW5R103K
A1C1521	281-0823-00			CAP.,FXD,CER DI:470PF,10%,50V	12969	CGB471KDN
A1C1525	290-0527-00			CAP.,FXD,ELCTLT:15UF,20%,20V	90201	TDC156M020FL
A1C1586	283-0114-00			CAP.,FXD,CER DI:0.0015UF,5%,200V	72982	805-509B152J
A1C1587	281-0786-00			CAP.,FXD,CER DI:150PF,10%,100V	72982	8035D2AADX5P151K
A1C1592	281-0773-00			CAP.,FXD,CER DI:0.01UF,10%,100V	72982	8005H9AADW5R103K

http://manoman.sqhill.com

Component No.	Tektronix Part No.	Serial/Model No. Eff	Dscont	Name & Description	Mfr Code	Mfr Part Number
A1C1597	281-0815-00			CAP.,FXD,CER DI:0.027UF,20%,50V	72982	8005D9AABW5R273M
A1C1611	281-0814-00			CAP.,FXD,CER DI:100PF,10%,100V	04222	GC70-1-A101K
A1C1615	281-0814-00			CAP.,FXD,CER DI:100PF,10%,100V	04222	GC70-1-A101K
A1C1623	281-0814-00			CAP.,FXD,CER DI:100PF,10%,100V	04222	GC70-1-A101K
A1C1643	281-0204-00			CAP.,VAR,PLSTC:2-22PF,100V	80031	287C00222MJ02
A1C1647	281-0809-00			CAP.,FXD,CER DI:200PF,5%,100V	72982	8013T2ADDC1G201J
A1C1682	281-0773-00			CAP.,FXD,CER DI:0.01UF,10%,100V	72982	8005H9AADW5R103K
A1C1683	281-0813-00			CAP.,FXD CER DI:0.047UF,20%,50V	04222	GC705-E-473M
A1C1690	281-0205-00			CAP.,VAR,PLSTC:4-65PF,100V	80031	2810C5R565QJ02F0
A1C1714	281-0814-00			CAP.,FXD,CER DI:100PF,10%,100V	04222	GC70-1-A101K
A1C1723	281-0814-00			CAP.,FXD,CER DI:100PF,10%,100V	04222	GC70-1-A101K
A1C1726	281-0814-00			CAP.,FXD,CER DI:100PF,10%,100V	04222	GC70-1-A101K
A1C1734	290-0527-00			CAP.,FXD,ELCTLT:15UF,20%,20V	90201	TDC156M020FL
A1C1787	281-0815-00			CAP.,FXD,CER DI:0.027UF,20%,50V	72982	8005D9AABW5R273M
A1C1804	281-0630-00			CAP.,FXD,CER DI:390PF,5%,500V	72982	630000Y5D391J
A1C1813	281-0809-00			CAP.,FXD,CER DI:200PF,5%,100V	72982	8013T2ADDC1G201J
A1C1822	281-0763-00			CAP.,FXD,CER DI:47PF,10%,100V	72982	8035D9AADC1G470K
A1C1827	281-0798-00			CAP.,FXD,CER DI:51PF,1%,100V	04222	MC101A510G
A1C1832	290-0517-00			CAP.,FXD,ELCTLT:6.8UF,20%,35V	56289	196D685X0035KA1
A1C1837	281-0815-00			CAP.,FXD,CER DI:0.027UF,20%,50V	72982	8005D9AABW5R273M
A1C1846	281-0812-00			CAP.,FXD,CER DI:1000PF,10%,100V	72982	8035D9AADX7R102K
A1C1848	281-0759-00			CAP.,FXD,CER DI:22PF,10%,100V	72982	8035D9AADC1G220K
A1C1854	281-0809-00			CAP.,FXD,CER DI:200PF,5%,100V	72982	8013T2ADDC1G201J
A1C1885	281-0815-00			CAP.,FXD,CER DI:0.027UF,20%,50V	72982	8005D9AABW5R273M
A1C1886	281-0815-00			CAP.,FXD,CER DI:0.027UF,20%,50V	72982	8005D9AABW5R273M
A1C1894	290-0517-00			CAP.,FXD,ELCTLT:6.8UF,20%,35V	56289	196D685X0035KA1
A1C1896	281-0547-00	B010100	B038899	CAP.,FXD,CER DI:2.7PF,10%,500V	72982	301-000C0J0279C
A1C1896	281-0547-00	B038900		CAP.,FXD,CER DI:2.7PF,10%,500V	72982	301-000C0J0279C
	----- -----			(NOMINAL VALUE,SELECTED)		
A1C1906	281-0799-00	XB045775		CAP.,FXD,CER DI:62PF,2%,100V	72982	8035D2AADC1G510G
A1C1911	281-0773-00			CAP.,FXD,CER DI:0.01UF,10%,100V	72982	8005H9AADW5R103K
A1C1912	290-0517-00			CAP.,FXD,ELCTLT:6.8UF,20%,35V	56289	196D685X0035KA1
A1C1943	281-0823-00			CAP.,FXD,CER DI:470PF,10%,50V	12969	CGB471KDN
A1CR1013	152-0141-02			SEMICOND DEVICE:SILICON,30V,150MA	01295	1N4152R
A1CR1014	152-0141-02			SEMICOND DEVICE:SILICON,30V,150MA	01295	1N4152R
A1CR1015	152-0141-02			SEMICOND DEVICE:SILICON,30V,150MA	01295	1N4152R
A1CR1023	152-0141-02			SEMICOND DEVICE:SILICON,30V,150MA	01295	1N4152R
A1CR1024	152-0141-02			SEMICOND DEVICE:SILICON,30V,150MA	01295	1N4152R
A1CR1034	152-0141-02			SEMICOND DEVICE:SILICON,30V,150MA	01295	1N4152R
A1CR1193	152-0153-00			SEMICOND DEVICE:SILICON,15V,50MA	07263	FD7003
A1CR1263	152-0612-00			SEMICOND DEVICE:V VAR CAP.,4V,17.5PF	80009	152-0612-00
A1CR1264	152-0612-00			SEMICOND DEVICE:V VAR CAP.,4V,17.5PF	80009	152-0612-00
A1CR1298	152-0323-00			SEMICOND DEVICE:SILICON,35V,0.1A	80009	152-0323-00
A1CR1312	152-0141-02			SEMICOND DEVICE:SILICON,30V,150MA	01295	1N4152R
A1CR1327	152-0141-02			SEMICOND DEVICE:SILICON,30V,150MA	01295	1N4152R
A1CR1432	152-0322-00			SEMICOND DEVICE:SILICON,15V,HOT CARRIER	50434	5082-2672
A1CR1434	152-0322-00			SEMICOND DEVICE:SILICON,15V,HOT CARRIER	50434	5082-2672
A1CR1436	152-0322-00			SEMICOND DEVICE:SILICON,15V,HOT CARRIER	50434	5082-2672
A1CR1438	152-0322-00			SEMICOND DEVICE:SILICON,15V,HOT CARRIER	50434	5082-2672
A1CR1441	152-0322-00			SEMICOND DEVICE:SILICON,15V,HOT CARRIER	50434	5082-2672
A1CR1443	152-0322-00			SEMICOND DEVICE:SILICON,15V,HOT CARRIER	50434	5082-2672
A1CR1445	152-0322-00			SEMICOND DEVICE:SILICON,15V,HOT CARRIER	50434	5082-2672
A1CR1447	152-0322-00			SEMICOND DEVICE:SILICON,15V,HOT CARRIER	50434	5082-2672
A1CR1529	152-0141-02			SEMICOND DEVICE:SILICON,30V,150MA	01295	1N4152R
A1CR1541	152-0322-00			SEMICOND DEVICE:SILICON,15V,HOT CARRIER	50434	5082-2672
A1CR1543	152-0322-00			SEMICOND DEVICE:SILICON,15V,HOT CARRIER	50434	5082-2672
A1CR1545	152-0322-00			SEMICOND DEVICE:SILICON,15V,HOT CARRIER	50434	5082-2672
A1CR1547	152-0322-00			SEMICOND DEVICE:SILICON,15V,HOT CARRIER	50434	5082-2672

http://manoman.sqhill.com

Component No.	Tektronix Part No.	Serial/Model No. Eff	Dscont	Name & Description	Mfr Code	Mfr Part Number
A1CR1693	152-0153-00			SEMICOND DEVICE:SILICON,15V,50MA	07263	FD7003
A1CR1727	152-0141-02			SEMICOND DEVICE:SILICON,30V,150MA	01295	1N4152R
A1CR1763	152-0612-00			SEMICOND DEVICE:V VAR CAP.,4V,17.5PF	80009	152-0612-00
A1CR1764	152-0612-00			SEMICOND DEVICE:V VAR CAP.,4V,17.5PF	80009	152-0612-00
A1CR1796	152-0323-00			SEMICOND DEVICE:SILICON,35V,0.1A	80009	152-0323-00
A1CR1818	152-0141-02			SEMICOND DEVICE:SILICON,30V,150MA	01295	1N4152R
A1CR1918	152-0141-02			SEMICOND DEVICE:SILICON,30V,150MA	01295	1N4152R
A1CR1936	152-0141-02			SEMICOND DEVICE:SILICON,30V,150MA	01295	1N4152R
A1L1245	108-0433-00			COIL,RF:0.09UH	80009	108-0433-00
A1L1412	108-0182-00			COIL,RF:0.3UH	80009	108-0182-00
A1L1512	108-0182-00			COIL,RF:0.3UH	80009	108-0182-00
A1L1642	108-0433-00			COIL,RF:0.09UH	80009	108-0433-00
A1Q1004	151-0190-00			TRANSISTOR:SILICON,NPN	07263	S032677
A1Q1028	151-0221-00	B010100	B022259	TRANSISTOR:SILICON,PNP	04713	SPS246
A1Q1028	151-0220-00	B022260	B045774	TRANSISTOR:SILICON,PNP	07263	S036228
A1Q1028	151-0438-00	B045775		TRANSISTOR:SILICON,PNP,SEL FROM SPS6927	80009	151-0438-00
A1Q1038	151-0271-00			TRANSISTOR:SILICON,PNP	04713	SPS5648
A1Q1045	151-0271-00			TRANSISTOR:SILICON,PNP	04713	SPS5648
A1Q1062	151-0190-00			TRANSISTOR:SILICON,NPN	07263	S032677
A1Q1118	151-0221-00			TRANSISTOR:SILICON,PNP	04713	SPS246
A1Q1125	151-0221-00			TRANSISTOR:SILICON,PNP	04713	SPS246
A1Q1145	151-0271-00			TRANSISTOR:SILICON,PNP	04713	SPS5648
A1Q1150	151-0221-00			TRANSISTOR:SILICON,PNP	04713	SPS246
A1Q1155	151-0434-00			TRANSISTOR:SILICON,PNP	04713	SS7144
A1Q1175	151-0198-00			TRANSISTOR:SILICON,NPN,SEL FROM MPS918	04713	SPS8802-1
A1Q1215	151-0198-00			TRANSISTOR:SILICON,NPN,SEL FROM MPS918	04713	SPS8802-1
A1Q1225	151-0221-00			TRANSISTOR:SILICON,PNP	04713	SPS246
A1Q1235	151-0221-00			TRANSISTOR:SILICON,PNP	04713	SPS246
A1Q1250	151-0221-00			TRANSISTOR:SILICON,PNP	04713	SPS246
A1Q1297	151-1090-00			TRANSISTOR:SILICON,DUAL,N CHANNEL,FET	80009	151-1090-00
A1Q1344	151-0221-00			TRANSISTOR:SILICON,PNP	04713	SPS246
A1Q1346	151-0221-00			TRANSISTOR:SILICON,PNP	04713	SPS246
A1Q1355	151-0434-00			TRANSISTOR:SILICON,PNP	04713	SS7144
A1Q1375	151-0198-00			TRANSISTOR:SILICON,NPN,SEL FROM MPS918	04713	SPS8802-1
A1Q1426	151-0472-00			TRANSISTOR:SILICON,NPN	80009	151-0472-00
A1Q1428	151-0472-00			TRANSISTOR:SILICON,NPN	80009	151-0472-00
A1Q1555	151-0190-00			TRANSISTOR:SILICON,NPN	07263	S032677
A1Q1617	151-0188-00			TRANSISTOR:SILICON,PNP	04713	SPS6868K
A1Q1619	151-0188-00			TRANSISTOR:SILICON,PNP	04713	SPS6868K
A1Q1636	151-0367-00			TRANSISTOR:SILICON,NPN,SEL FROM 3571TP	01295	SKA6516
A1Q1644	151-0221-00			TRANSISTOR:SILICON,PNP	04713	SPS246
A1Q1646	151-0221-00			TRANSISTOR:SILICON,PNP	04713	SPS246
A1Q1655	151-0434-00			TRANSISTOR:SILICON,PNP	04713	SS7144
A1Q1675	151-0198-00			TRANSISTOR:SILICON,NPN,SEL FROM MPS918	04713	SPS8802-1
A1Q1698	151-1090-00			TRANSISTOR:SILICON,DUAL,N CHANNEL,FET	80009	151-1090-00
A1Q1719	151-0188-00			TRANSISTOR:SILICON,PNP	04713	SPS6868K
A1Q1746	151-0221-00			TRANSISTOR:SILICON,PNP	04713	SPS246
A1Q1812	151-0188-00			TRANSISTOR:SILICON,PNP	04713	SPS6868K
A1Q1833	151-0221-00			TRANSISTOR:SILICON,PNP	04713	SPS246
A1Q1845	151-0271-00			TRANSISTOR:SILICON,PNP	04713	SPS5648
A1Q1855	151-0434-00			TRANSISTOR:SILICON,PNP	04713	SS7144
A1Q1875	151-0198-00			TRANSISTOR:SILICON,NPN,SEL FROM MPS918	04713	SPS8802-1
A1Q1938	151-0271-00			TRANSISTOR:SILICON,PNP	04713	SPS5648
A1Q1948	151-0271-00			TRANSISTOR:SILICON,PNP	04713	SPS5648
A1Q1954	151-0221-00			TRANSISTOR:SILICON,PNP	04713	SPS246
A1R1015	315-0472-00			RES.,FXD,CMPSN:4.7K OHM,5%,0.25W	01121	CB4725
A1R1016	321-0064-00			RES.,FXD,FILM:45.3 OHM,1%,0.125W	91637	MFF1816G45R30F
A1R1032	321-0201-00	B010100	B022259	RES.,FXD,FILM:1.21K OHM,1%,0.125W	91637	MFF1816G12100F

http://manoman.sqhill.com

Component No.	Tektronix Part No.	Serial/Model No. Eff	Dscont	Name & Description	Mfr Code	Mfr Part Number
A1R1032	321-0204-00	B022260		RES.,FXD,FILM:1.3K OHM,1%,0.125W	91637	MFF1816G13000F
A1R1033	315-0331-00			RES.,FXD,CMPSN:330 OHM,5%,0.25W	01121	CB3315
A1R1035	315-0470-00			RES.,FXD,CMPSN:47 OHM,5%,0.25W	01121	CB4705
A1R1042	315-0431-00			RES.,FXD,CMPSN:430 OHM,5%,0.25W	01121	CB4315
A1R1052	315-0101-00			RES.,FXD,CMPSN:100 OHM,5%,0.25W	01121	CB1015
A1R1055	311-1311-00			RES.,VAR,NONWIR:1K OHM,20%,1W	01121	73M4G048L102M
A1R1064	321-0190-00			RES.,FXD,FILM:931 OHM,1%,0.125W	91637	MFF1816G931R0F
A1R1072	315-0112-00			RES.,FXD,CMPSN:1.1K OHM,5%,0.25W	01121	CB1125
A1R1081	321-0229-00			RES.,FXD,FILM:2.37K OHM,1%,0.125W	91637	MFF1816G23700F
A1R1082	321-0229-00			RES.,FXD,FILM:2.37K OHM,1%,0.125W	91637	MFF1816G23700F
A1R1087	315-0470-00			RES.,FXD,CMPSN:47 OHM,5%,0.25W	01121	CB4705
A1R1095	321-0030-00			RES.,FXD,FILM:20 OHM,1%,0.125W	91637	MFF1816G20R00F
A1R1106	321-0064-00			RES.,FXD,FILM:45.3 OHM,1%,0.125W	91637	MFF1816G45R30F
A1R1107	321-0068-00			RES.,FXD,FILM:49.9 OHM,1%,0.125W	91637	MFF1816G49R90F
A1R1108	321-0126-00			RES.,FXD,FILM:200 OHM,1%,0.125W	91637	MFF1816G200R0F
A1R1116	315-0751-00			RES.,FXD,CMPSN:750 OHM,5%,0.25W	01121	CB7515
A1R1117	315-0331-00			RES.,FXD,CMPSN:330 OHM,5%,0.25W	01121	CB3315
A1R1126	311-1564-00			RES.,VAR,NONWIR:TRMR,500 OHM,0.5W	73138	91-86-0
A1R1135	311-1558-00			RES.,VAR,NONWIR:20K OHM,20%,0.50W	73138	91-80-0
A1R1136	315-0331-00			RES.,FXD,CMPSN:330 OHM,5%,0.25W	01121	CB3315
A1R1143	321-0195-00	B010100	B010239	RES.,FXD,FILM:1.05K OHM,1%,0.125W	91637	MFF1816G10500F
A1R1143	321-0192-00	B010240		RES.,FXD,FILM:976 OHM,1%,0.125W	91637	MFF1816G976R0F
A1R1144	321-0087-00	B010100	B010239	RES.,FXD,FILM:78.7 OHM,1%,0.125W	91637	MFF1816G78R70F
A1R1144	321-0126-00	B010240		RES.,FXD,FILM:200 OHM,1%,0.125W	91637	MFF1816G200R0F
A1R1147	315-0390-00			RES.,FXD,CMPSN:39 OHM,5%,0.25W	01121	CB3905
A1R1148	315-0222-00			RES.,FXD,CMPSN:2.2K OHM,5%,0.25W	01121	CB2225
A1R1152	315-0241-00			RES.,FXD,CMPSN:240 OHM,5%,0.25W	01121	CB2415
A1R1159	321-0126-00			RES.,FXD,FILM:200 OHM,1%,0.125W	91637	MFF1816G200R0F
A1R1168	315-0183-00			RES.,FXD,CMPSN:18K OHM,5%,0.25W	01121	CB1835
A1R1173	315-0241-00			RES.,FXD,CMPSN:240 OHM,5%,0.25W	01121	CB2415
A1R1176	311-1560-00			RES.,VAR,NONWIR:5K OHM,20%,0.50W	73138	91-82-0
A1R1185	311-1560-00			RES.,VAR,NONWIR:5K OHM,20%,0.50W	73138	91-82-0
A1R1186	315-0470-00			RES.,FXD,CMPSN:47 OHM,5%,0.25W	01121	CB4705
A1R1188	315-0470-00			RES.,FXD,CMPSN:47 OHM,5%,0.25W	01121	CB4705
A1R1190	311-1567-00			RES.,VAR,NONWIR:TRMR,100 OHM,0.50W	73138	91-89-0
A1R1202	311-1564-00			RES.,VAR,NONWIR:TRMR,500 OHM,0.5W	73138	91-86-0
A1R1205	321-0206-00			RES.,FXD,FILM:1.37K OHM,1%,0.125W	91637	MFF1816G13700F
A1R1206	321-0177-00			RES.,FXD,FILM:681 OHM,1%,0.125W	91637	MFF1816G681R0F
A1R1207	315-0271-00			RES.,FXD,CMPSN:270 OHM,5%,0.25W	01121	CB2715
A1R1208	323-0156-00			RES.,FXD,FILM:412 OHM,1%,0.50W	75042	CECT0-4120F
A1R1216	315-0511-00			RES.,FXD,CMPSN:510 OHM,5%,0.25W	01121	CB5115
A1R1232	315-0430-00			RES.,FXD,CMPSN:43 OHM,5%,0.25W	01121	CB4305
A1R1233	315-0512-00			RES.,FXD,CMPSN:5.1K OHM,5%,0.25W	01121	CB5125
A1R1234	321-0149-00	B010100	B010239	RES.,FXD,FILM:348 OHM,1%,0.125W	91637	MFF1816G348R0F
A1R1234	321-0196-00	B010240		RES.,FXD,FILM:1.07K OHM,1%,0.125W	91637	MFF1816G10700F
A1R1242	321-0195-00	B010100	B010239	RES.,FXD,FILM:1.05K OHM,1%,0.125W	91637	MFF1816G10500F
A1R1242	321-0192-00	B010240		RES.,FXD,FILM:976 OHM,1%,0.125W	91637	MFF1816G976R0F
A1R1243	315-0392-00			RES.,FXD,CMPSN:3.9K OHM,5%,0.25W	01121	CB3925
A1R1244	315-0392-00			RES.,FXD,CMPSN:3.9K OHM,5%,0.25W	01121	CB3925
A1R1246	315-0390-00			RES.,FXD,CMPSN:39 OHM,5%,0.25W	01121	CB3905
A1R1247	315-0222-00			RES.,FXD,CMPSN:2.2K OHM,5%,0.25W	01121	CB2225
A1R1252	321-0170-00			RES.,FXD,FILM:576 OHM,1%,0.125W	91637	MFF1816G576R0F
A1R1253	321-0170-00			RES.,FXD,FILM:576 OHM,1%,0.125W	91637	MFF1816G576R0F
A1R1254	321-0089-00			RES.,FXD,FILM:82.5 OHM,1%,0.125W	91637	MFF1816G82R50F
A1R1256	315-0100-00			RES.,FXD,CMPSN:10 OHM,5%,0.25W	01121	CB1005
A1R1258	315-0100-00			RES.,FXD,CMPSN:10 OHM,5%,0.25W	01121	CB1005
A1R1274	315-0301-00			RES.,FXD,CMPSN:300 OHM,5%,0.25W	01121	CB3015

http://manoman.sqhill.com

Component No.	Tektronix Part No.	Serial/Model No. Eff	Dscont	Name & Description	Mfr Code	Mfr Part Number
A1R1275	321-0181-00			RES.,FXD,FILM:750 OHM,1%,0.125W	91637	MFF1816G750R0F
A1R1276	321-0181-00			RES.,FXD,FILM:750 OHM,1%,0.125W	91637	MFF1816G750R0F
A1R1278	315-0270-00			RES.,FXD,CMPSN:27 OHM,5%,0.25W	01121	CB2705
A1R1285	311-1403-00			RES.,VAR,NONWIR:5K OHM,20%,0.50W	01121	10M922
A1R1296	321-0030-00			RES.,FXD,FILM:20 OHM,1%,0.125W	91637	MFF1816G20R00F
A1R1299	315-0621-00	B010100	B038899	RES.,FXD,CMPSN:620 OHM,5%,0.25W	01121	CB6215
A1R1299	315-0621-00 -----	B038900		RES.,FXD,CMPSN:620 OHM,5%,0.25W (NOMINAL VALUE,SELECTED)	01121	CB6215
A1R1311	321-0049-00			RES.,FXD,FILM:31.6 OHM,1%,0.125W	91637	MFF1816G31R60F
A1R1314	321-0065-00			RES.,FXD,FILM:46.4 OHM,1%,0.125W	91637	MFF1816G46R40F
A1R1326	315-0430-00			RES.,FXD,CMPSN:43 OHM,5%,0.25W	01121	CB4305
A1R1328	321-0126-00			RES.,FXD,FILM:200 OHM,1%,0.125W	91637	MFF1816G200R0F
A1R1333	315-0821-00			RES.,FXD,CMPSN:820 OHM,5%,0.25W	01121	CB8215
A1R1334	315-0821-00			RES.,FXD,CMPSN:820 OHM,5%,0.25W	01121	CB8215
A1R1335	311-1563-00			RES.,VAR,NONWIR:1K OHM,20%,0.50W	73138	91-85-0
A1R1353	315-0241-00			RES.,FXD,CMPSN:240 OHM,5%,0.25W	01121	CB2415
A1R1358	321-0126-00			RES.,FXD,FILM:200 OHM,1%,0.125W	91637	MFF1816G200R0F
A1R1376	315-0301-00			RES.,FXD,CMPSN:300 OHM,5%,0.25W	01121	CB3015
A1R1382	315-0470-00			RES.,FXD,CMPSN:47 OHM,5%,0.25W	01121	CB4705
A1R1384	315-0101-00			RES.,FXD,CMPSN:100 OHM,5%,0.25W	01121	CB1015
A1R1385	315-0101-00			RES.,FXD,CMPSN:100 OHM,5%,0.25W	01121	CB1015
A1R1391	315-0151-00			RES.,FXD,CMPSN:150 OHM,5%,0.25W	01121	CB1515
A1R1392	315-0103-00			RES.,FXD,CMPSN:10K OHM,5%,0.25W	01121	CB1035
A1R1422	315-0750-00			RES.,FXD,CMPSN:75 OHM,5%,0.25W	01121	CB7505
A1R1438	315-0302-00			RES.,FXD,CMPSN:3K OHM,5%,0.25W	01121	CB3025
A1R1439	315-0302-00			RES.,FXD,CMPSN:3K OHM,5%,0.25W	01121	CB3025
A1R1448	315-0511-00			RES.,FXD,CMPSN:510 OHM,5%,0.25W	01121	CB5115
A1R1449	315-0751-00			RES.,FXD,CMPSN:750 OHM,5%,0.25W	01121	CB7515
A1R1482	311-1561-00			RES.,VAR,NONWIR:2.5K OHM,20%,0.50W	73138	91-83-0
A1R1484	311-1559-00			RES.,VAR,NONWIR:10K OHM,20%,0.50W	73138	91-81-0
A1R1486	321-0307-00			RES.,FXD,FILM:15.4K OHM,1%,0.125W	91637	MFF1816G15401F
A1R1487	321-0239-00			RES.,FXD,FILM:3.01K OHM,1%,0.125W	91637	MFF1816G30100F
A1R1488	321-0277-00			RES.,FXD,FILM:7.5K OHM,1%,0.125W	91637	MFF1816G75000F
A1R1504	315-0331-00			RES.,FXD,CMPSN:330 OHM,5%,0.25W	01121	CB3315
A1R1514	321-0065-00			RES.,FXD,FILM:46.4 OHM,1%,0.125W	91637	MFF1816G46R40F
A1R1516	323-0161-00			RES.,FXD,FILM:464 OHM,1%,0.50W	75042	CECT0-4640F
A1R1521	315-0750-00			RES.,FXD,CMPSN:75 OHM,5%,0.25W	01121	CB7505
A1R1522	321-0126-00			RES.,FXD,FILM:200 OHM,1%,0.125W	91637	MFF1816G200R0F
A1R1532	321-0186-00			RES.,FXD,FILM:845 OHM,1%,0.125W	91637	MFF1816G845R0F
A1R1534	321-0186-00			RES.,FXD,FILM:845 OHM,1%,0.125W	91637	MFF1816G845R0F
A1R1536	321-0133-00			RES.,FXD,FILM:237 OHM,1%,0.125W	91637	MFF1816G237R0F
A1R1538	321-0133-00			RES.,FXD,FILM:237 OHM,1%,0.125W	91637	MFF1816G237R0F
A1R1548	315-0751-00			RES.,FXD,CMPSN:750 OHM,5%,0.25W	01121	CB7515
A1R1549	315-0511-00			RES.,FXD,CMPSN:510 OHM,5%,0.25W	01121	CB5115
A1R1558	311-1311-00			RES.,VAR,NONWIR:1K OHM,20%,1W	01121	73M4G048L102M
A1R1562	321-0190-00			RES.,FXD,FILM:931 OHM,1%,0.125W	91637	MFF1816G931R0F
A1R1579	321-0229-00			RES.,FXD,FILM:2.37K OHM,1%,0.125W	91637	MFF1816G23700F
A1R1580	311-1560-00			RES.,VAR,NONWIR:5K OHM,20%,0.50W	73138	91-82-0
A1R1582	311-1560-00			RES.,VAR,NONWIR:5K OHM,20%,0.50W	73138	91-82-0
A1R1586	315-0241-00			RES.,FXD,CMPSN:240 OHM,5%,0.25W	01121	CB2415
A1R1587	315-0112-00			RES.,FXD,CMPSN:1.1K OHM,5%,0.25W	01121	CB1125
A1R1589	315-0470-00			RES.,FXD,CMPSN:47 OHM,5%,0.25W	01121	CB4705
A1R1590	321-0229-00			RES.,FXD,FILM:2.37K OHM,1%,0.125W	91637	MFF1816G23700F
A1R1612	315-0752-00			RES.,FXD,CMPSN:7.5K OHM,5%,0.25W	01121	CB7525
A1R1613	315-0103-00			RES.,FXD,CMPSN:10K OHM,5%,0.25W	01121	CB1035
A1R1616	315-0752-00			RES.,FXD,CMPSN:7.5K OHM,5%,0.25W	01121	CB7525

http://manoman.sqhill.com

Component No.	Tektronix Part No.	Serial/Model No. Eff	Dscont	Name & Description	Mfr Code	Mfr Part Number
A1R1624	321-0145-00			RES.,FXD,FILM:316 OHM,1%,0.125W	91637	MFF1816G316R0F
A1R1625	321-0151-00			RES.,FXD,FILM:365 OHM,1%,0.125W	91637	MFF1816G365R0F
A1R1626	321-0145-00			RES.,FXD,FILM:316 OHM,1%,0.125W	91637	MFF1816G316R0F
A1R1632	323-0106-00			RES.,FXD,FILM:124 OHM,1%,0.50W	91637	MFF1226G124R0F
A1R1634	311-1563-00			RES.,VAR,NONWIR:1K OHM,20%,0.50W	73138	91-85-0
A1R1645	315-0392-00			RES.,FXD,CMPSN:3.9K OHM,5%,0.25W	01121	CB3925
A1R1647	315-0241-00			RES.,FXD,CMPSN:240 OHM,5%,0.25W	01121	CB2415
A1R1661	321-0126-00			RES.,FXD,FILM:200 OHM,1%,0.125W	91637	MFF1816G200R0F
A1R1683	315-0470-00			RES.,FXD,CMPSN:47 OHM,5%,0.25W	01121	CB4705
A1R1684	315-0470-00			RES.,FXD,CMPSN:47 OHM,5%,0.25W	01121	CB4705
A1R1685	311-1567-00			RES.,VAR,NONWIR:TRMR,100 OHM,0.50W	73138	91-89-0
A1R1687	315-0270-00			RES.,FXD,CMPSN:27 OHM,5%,0.25W	01121	CB2705
A1R1695	321-0030-00			RES.,FXD,FILM:20 OHM,1%,0.125W	91637	MFF1816G20R00F
A1R1712	315-0103-00			RES.,FXD,CMPSN:10K OHM,5%,0.25W	01121	CB1035
A1R1714	315-0752-00			RES.,FXD,CMPSN:7.5K OHM,5%,0.25W	01121	CB7525
A1R1716	315-0103-00			RES.,FXD,CMPSN:10K OHM,5%,0.25W	01121	CB1035
A1R1724	321-0145-00			RES.,FXD,FILM:316 OHM,1%,0.125W	91637	MFF1816G316R0F
A1R1725	321-0151-00			RES.,FXD,FILM:365 OHM,1%,0.125W	91637	MFF1816G365R0F
A1R1735	311-1558-00			RES.,VAR,NONWIR:20K OHM,20%,0.50W	73138	91-80-0
A1R1742	315-0392-00			RES.,FXD,CMPSN:3.9K OHM,5%,0.25W	01121	CB3925
A1R1744	315-0390-00			RES.,FXD,CMPSN:39 OHM,5%,0.25W	01121	CB3905
A1R1752	321-0170-00			RES.,FXD,FILM:576 OHM,1%,0.125W	91637	MFF1816G576R0F
A1R1753	321-0170-00			RES.,FXD,FILM:576 OHM,1%,0.125W	91637	MFF1816G576R0F
A1R1754	321-0089-00			RES.,FXD,FILM:82.5 OHM,1%,0.125W	91637	MFF1816G82R50F
A1R1756	315-0100-00			RES.,FXD,CMPSN:10 OHM,5%,0.25W	01121	CB1005
A1R1758	315-0100-00			RES.,FXD,CMPSN:10 OHM,5%,0.25W	01121	CB1005
A1R1774	315-0301-00			RES.,FXD,CMPSN:300 OHM,5%,0.25W	01121	CB3015
A1R1775	321-0181-00			RES.,FXD,FILM:750 OHM,1%,0.125W	91637	MFF1816G750R0F
A1R1776	321-0181-00			RES.,FXD,FILM:750 OHM,1%,0.125W	91637	MFF1816G750R0F
A1R1782	311-1403-00			RES.,VAR,NONWIR:5K OHM,20%,0.50W	01121	10M922
A1R1794	321-0030-00			RES.,FXD,FILM:20 OHM,1%,0.125W	91637	MFF1816G20R00F
A1R1798	315-0621-00	B010100	B038899	RES.,FXD,CMPSN:620 OHM,5%,0.25W	01121	CB6215
A1R1798	315-0621-00	B038900		RES.,FXD,CMPSN:620 OHM,5%,0.25W	01121	CB6215
	----- -----			(NOMIMAL VALUE,SELECTED)		
A1R1815	315-0102-00			RES.,FXD,CMPSN:1K OHM,5%,0.25W	01121	CB1025
A1R1816	315-0302-00			RES.,FXD,CMPSN:3K OHM,5%,0.25W	01121	CB3025
A1R1817	315-0302-00			RES.,FXD,CMPSN:3K OHM,5%,0.25W	01121	CB3025
A1R1818	315-0103-00	XB010965		RES.,FXD,CMPSN:10K OHM,5%,0.25W	01121	CB1035
A1R1825	315-0102-00			RES.,FXD,CMPSN:1K OHM,5%,0.25W	01121	CB1025
A1R1828	321-0064-00			RES.,FXD,FILM:45.3 OHM,1%,0.125W	91637	MFF1816G45R30F
A1R1834	321-0201-00	B010100	B022259	RES.,FXD,FILM:1.21K OHM,1%,0.125W	91637	MFF1816G12100F
A1R1834	321-0204-00	B022260		RES.,FXD,FILM:1.3K OHM,1%,0.125W	91637	MFF1816G13000F
A1R1835	311-1564-00			RES.,VAR,NONWIR:TRMR,500 OHM,0.5W	73138	91-86-0
A1R1838	315-0470-00			RES.,FXD,CMPSN:47 OHM,5%,0.25W	01121	CB4705
A1R1839	315-0431-00			RES.,FXD,CMPSN:430 OHM,5%,0.25W	01121	CB4315
A1R1842	321-0195-00	B010100	B010239	RES.,FXD,FILM:1.05K OHM,1%,0.125W	91637	MFF1816G10500F
A1R1842	321-0192-00	B010240		RES.,FXD,FILM:976 OHM,1%,0.125W	91637	MFF1816G976R0F
A1R1843	321-0195-00	B010100	B010239	RES.,FXD,FILM:1.05K OHM,1%,0.125W	91637	MFF1816G10500F
A1R1843	321-0192-00	B010240		RES.,FXD,FILM:976 OHM,1%,0.125W	91637	MFF1816G976R0F
A1R1849	315-0222-00			RES.,FXD,CMPSN:2.2K OHM,5%,0.25W	01121	CB2225
A1R1854	315-0241-00			RES.,FXD,CMPSN:240 OHM,5%,0.25W	01121	CB2415
A1R1858	321-0126-00			RES.,FXD,FILM:200 OHM,1%,0.125W	91637	MFF1816G200R0F
A1R1868	315-0183-00			RES.,FXD,CMPSN:18K OHM,5%,0.25W	01121	CB1835
A1R1876	315-0301-00			RES.,FXD,CMPSN:300 OHM,5%,0.25W	01121	CB3015
A1R1881	315-0470-00			RES.,FXD,CMPSN:47 OHM,5%,0.25W	01121	CB4705
A1R1882	311-1561-00			RES.,VAR,NONWIR:2.5K OHM,20%,0.50W	73138	91-83-0

http://manoman.sqhill.com

Component No.	Tektronix Part No.	Serial/Model No. Eff	Dscont	Name & Description	Mfr Code	Mfr Part Number
A1R1885	315-0101-00			RES.,FXD,CMPSN:100 OHM,5%,0.25W	01121	CB1015
A1R1886	315-0101-00			RES.,FXD,CMPSN:100 OHM,5%,0.25W	01121	CB1015
A1R1889	315-0103-00			RES.,FXD,CMPSN:10K OHM,5%,0.25W	01121	CB1035
A1R1891	315-0151-00			RES.,FXD,CMPSN:150 OHM,5%,0.25W	01121	CB1515
A1R1893	315-0103-00			RES.,FXD,CMPSN:10K OHM,5%,0.25W	01121	CB1035
A1R1903	315-0112-00			RES.,FXD,CMPSN:1.1K OHM,5%,0.25W	01121	CB1125
A1R1904	315-0221-00			RES.,FXD,CMPSN:220 OHM,5%,0.25W	01121	CB2215
A1R1906	315-0203-00			RES.,FXD,CMPSN:20K OHM,5%,0.25W	01121	CB2035
A1R1914	315-0122-00			RES.,FXD,CMPSN:1.2K OHM,5%,0.25W	01121	CB1225
A1R1916	315-0471-00			RES.,FXD,CMPSN:470 OHM,5%,0.25W	01121	CB4715
A1R1922	315-0102-00			RES.,FXD,CMPSN:1K OHM,5%,0.25W	01121	CB1025
A1R1924	315-0122-00			RES.,FXD,CMPSN:1.2K OHM,5%,0.25W	01121	CB1225
A1R1932	315-0751-00			RES.,FXD,CMPSN:750 OHM,5%,0.25W	01121	CB7515
A1R1934	321-0149-00	B010100	B010239	RES.,FXD,FILM:348 OHM,1%,0.125W	91637	MFF1816G348R0F
A1R1934	321-0196-00	B010240		RES.,FXD,FILM:1.07K OHM,1%,0.125W	91637	MFF1816G10700F
A1R1944	315-0331-00			RES.,FXD,CMPSN:330 OHM,5%,0.25W	01121	CB3315
A1R1946	321-0087-00	B010100	B010239	RES.,FXD,FILM:78.7 OHM,1%,0.125W	91637	MFF1816G78R70F
A1R1946	321-0126-00	B010240		RES.,FXD,FILM:200 OHM,1%,0.125W	91637	MFF1816G200R0F
A1R1952	315-0101-00			RES.,FXD,CMPSN:100 OHM,5%,0.25W	01121	CB1015
A1R1956	315-0390-00			RES.,FXD,CMPSN:39 OHM,5%,0.25W	01121	CB3905
A1R1958	315-0222-00			RES.,FXD,CMPSN:2.2K OHM,5%,0.25W	01121	CB2225
A1R1975	311-1559-00			RES.,VAR,NONWIR:10K OHM,20%,0.50W	73138	91-81-0
A1R1981	321-0307-00			RES.,FXD,FILM:15.4K OHM,1%,0.125W	91637	MFF1816G15401F
A1R1983	321-0307-00			RES.,FXD,FILM:15.4K OHM,1%,0.125W	91637	MFF1816G15401F
A1R1986	321-0277-00			RES.,FXD,FILM:7.5K OHM,1%,0.125W	91637	MFF1816G75000F
A1R1987	321-0277-00			RES.,FXD,FILM:7.5K OHM,1%,0.125W	91637	MFF1816G75000F
A1R1988	321-0253-00	B010100	B010964	RES.,FXD,FILM:4.22K OHM,1%,0.125W	91637	MFF1816G42200F
A1R1988	321-0260-00	B010965		RES.,FXD,FILM:4.99K OHM,1%,0.125W	91637	MFF1816G49900F
A1R1989	321-0253-00	B010100	B010964	RES.,FXD,FILM:4.22K OHM,1%,0.125W	91637	MFF1816G42200F
A1R1989	321-0260-00	B010965		RES.,FXD,FILM:4.99K OHM,1%,0.125W	91637	MFF1816G49900F
A1RT1267	307-0181-00			RES.,THERMAL:100K OHM,10%,4MW/DEG C	15454	1DE104-K-220EC
A1RT1767	307-0181-00			RES.,THERMAL:100K OHM,10%,4MW/DEG C	15454	1DE104-K-220EC
A1S1414	260-1486-00			SWITCH,PUSH:1 BUTTON,PB1,4P,PUSH-PUSH	80009	260-1486-00
A1S1995	260-1208-00			SWITCH,PUSH:DPDT,28VDC,PUSH-PUSH	80009	260-1208-00
A1U1290	155-0078-10			MICROCIRCUIT,LI:ML,VERTICAL AMPLIFIER	80009	155-0078-10
A1U1605	160-0204-00	B010100	B010959	MICROCIRCUIT,DI:256 X 4 ROM,CUSTOM MASK	80009	160-0204-00
A1U1605	160-0204-01	B010960		MICROCIRCUIT,DI:256 X 4 ROM,SCRN	80009	160-0204-01
A1U1705	156-0392-00			MICROCIRCUIT,DI:QUAD LATCH	34335	SN74LS175N OR J
A1U1790	155-0078-10			MICROCIRCUIT,LI:ML,VERTICAL AMPLIFIER	80009	155-0078-10
A1U1805	156-0480-00			MICROCIRCUIT,DI:QUAD 2-INPUT AND GATE	01295	SN74LS08(N OR J)
A1U1905	156-0382-00			MICROCIRCUIT,DI:QUAD 2-INPUT NAND GATE	01295	SN74LS00(N OR J)
A1VR1096	152-0166-00			SEMICOND DEVICE:ZENER,0.4W,6.2V,5%	04713	SZ11738
A1VR1356	152-0166-00			SEMICOND DEVICE:ZENER,0.4W,6.2V,5%	04713	SZ11738
A1VR1597	152-0166-00			SEMICOND DEVICE:ZENER,0.4W,6.2V,5%	04713	SZ11738
A1VR1662	152-0166-00			SEMICOND DEVICE:ZENER,0.4W,6.2V,5%	04713	SZ11738
A1VR1824	152-0306-00			SEMICOND DEVICE:ZENER,0.4W,9.1V,5%	14433	1N960B
A1W1527	131-0566-00			BUS CONDUCTOR:DUMMY RES,2.375,22 AWG	55210	L-2007-1
A1W1732	131-0566-00			BUS CONDUCTOR:DUMMY RES,2.375,22 AWG	55210	L-2007-1

http://manoman.sqhill.com

Component No.	Tektronix Part No.	Serial/Model No. Eff	Dscont	Name & Description	Mfr Code	Mfr Part Number
A2	----- -----			CKT BOARD ASSY:VERTICAL OUTPUT		
A2C2016	281-0775-00	B010100	B029999X	CAP.,FXD,CER DI:0.1UF,20%,50V	72982	8005D9AABZ5U104M
A2C2038	281-0768-00	XB030000		CAP.,FXD,CER DI:470PF,20%,100V	72982	8035D9AADW5R471M
A2C2047	281-0775-00	XB030000		CAP.,FXD,CER DI:0.1UF,20%,50V	72982	8005D9AABZ5U104M
A2C2112	281-0773-00	B010100	B029999X	CAP.,FXD,CER DI:0.01UF,10%,100V	72982	8005H9AADW5R103K
A2C2126	281-0773-00	XB030000		CAP.,FXD,CER DI:0.01UF,10%,100V	72982	8005H9AADW5R103K
A2C2133	281-0771-00	B010100	B029999X	CAP.,FXD,CER DI:0.0022UF,20%,200V	72982	314-0222Z5U0222M
A2C2172	281-0775-00	XB030000		CAP.,FXD,CER DI:0.1UF,20%,50V	72982	8005D9AABZ5U104M
A2C2174	281-0775-00	B010100	B029999X	CAP.,FXD,CER DI:0.1UF,20%,50V	72982	8005D9AABZ5U104M
A2C2196	281-0783-00	XB030000		CAP.,FXD,CER DI:0.1UF,20%,100V	72982	8045-D-Z5U104M
A2C2293	281-0783-00	B010100	B029999X	CAP.,FXD,CER DI:0.1UF,20%,100V	72982	8045-D-Z5U104M
A2C2308	281-0089-00	B010100	B029999X	CAP.,VAR,CER DI:2-8PF,350V	72982	538-006-A2-8
A2C2315	281-0089-00	XB030000		CAP.,VAR,CER DI:2-8PF,350V	72982	538-006-A2-8
A2C2334	281-0772-00	XB030000		CAP.,FXD,CER DI:0.0047UF,10%,100V	72982	8005H9AADW5R472K
A2C2335	281-0775-00	XB030000		CAP.,FXD,CER DI:0.1UF,20%,50V	72982	8005D9AABZ5U104M
A2C2336	281-0812-00	XB030000		CAP.,FXD,CER DI:1000PF,10%,100V	72982	8035D9AADX7R102K
A2C2337	281-0797-00	XB030000		CAP.,FXD,CER DI:15PF,10%,100V	72982	8035D9AADC0G150K
A2C2338	281-0797-00	B010100	B029999X	CAP.,FXD,CER DI:15PF,10%,100V	72982	8035D9AADC0G150K
A2C2339	281-0773-00	XB030000		CAP.,FXD,CER DI:0.01UF,10%,100V	72982	8005H9AADW5R103K
A2C2346	281-0096-00	XB030000		CAP.,VAR,AIR DI:5.5-18PF,350V	72982	538-006-A5.5-18
A2C2350	281-0096-00	B010100	B029999X	CAP.,VAR,AIR DI:5.5-18PF,350V	72982	538-006-A5.5-18
A2C2412	281-0775-00	B010100	B029999X	CAP.,FXD,CER DI:0.1UF,20%,50V	72982	8005D9AABZ5U104M
A2C2415	281-0812-00	B010100	B029999X	CAP.,FXD,CER DI:1000PF,10%,100V	72982	8035D9AADX7R102K
A2C2417	281-0775-00	XB030000		CAP.,FXD,CER DI:0.1UF,20%,50V	72982	8005D9AABZ5U104M
A2C2421	281-0788-00	B010100	B029999X	CAP.,FXD,CER DI:470PF,10%,100V	72982	8005H9AADW5R471K
A2C2422	281-0812-00	XB030000		CAP.,FXD,CER DI:1000PF,10%,100V	72982	8035D9AADX7R102K
A2C2424	281-0788-00	XB042675		CAP.,FXD,CER DI:470PF,10%,100V	72982	8005H9AADW5R471K
A2C2428	281-0773-00	B010100	B029999X	CAP.,FXD,CER DI:0.01UF,10%,100V	72982	8005H9AADW5R103K
A2C2436	281-0812-00	B010100	B029999X	CAP.,FXD,CER DI:1000PF,10%,100V	72982	8035D9AADX7R102K
A2C2438	281-0773-00	B010100	B029999X	CAP.,FXD,CER DI:0.01UF,10%,100V	72982	8005H9AADW5R103K
A2C2439	281-0772-00	B010100	B029999X	CAP.,FXD,CER DI:0.0047UF,10%,100V	72982	8005H9AADW5R472K
A2C2481	281-0775-00	B010100	B029999X	CAP.,FXD,CER DI:0.1UF,20%,50V	72982	8005D9AABZ5U104M
A2C2483	281-0775-00	B010100	B029999X	CAP.,FXD,CER DI:0.1UF,20%,50V	72982	8005D9AABZ5U104M
A2C2486	281-0775-00	XB030000		CAP.,FXD,CER DI:0.1UF,20%,50V	72982	8005D9AABZ5U104M
A2C2488	281-0775-00	XB030000		CAP.,FXD,CER DI:0.1UF,20%,50V	72982	8005D9AABZ5U104M
A2L2264	108-0328-00	XB030000		COIL,RF:0.3UH	80009	108-0328-00
A2L2267	108-0328-00	XB030000		COIL,RF:0.3UH	80009	108-0328-00
A2L2296	108-0538-00	XB030000		COIL,RF:2.7UH	76493	70F276A1
A2L2393	108-0538-00	B010100	B029999X	COIL,RF:2.7UH	76493	70F276A1
A2L2419	108-0760-00	B010100	B029999X	COIL,RF:FIXED,57NH	80009	108-0760-00
A2L2485	108-0538-00	B010100	B029999X	COIL,RF:2.7UH	76493	70F276A1
A2L2487	108-0538-00	B010100	B029999X	COIL,RF:2.7UH	76493	70F276A1
A2L2492	108-0538-00	XB030000		COIL,RF:2.7UH	76493	70F276A1
A2L2494	108-0538-00	XB030000		COIL,RF:2.7UH	76493	70F276A1
A2LR2264	108-0328-00	XB030000		COIL,RF:0.3UH	80009	108-0328-00
A2LR2265	108-0328-00	XB030000		COIL,RF:0.3UH	80009	108-0328-00
A2LR2267	108-0328-00	XB030000		COIL,RF:0.3UH	80009	108-0328-00
A2LR2268	108-0328-00	B010100	B029999X	COIL,RF:0.3UH	80009	108-0328-00
A2LR2366	108-0328-00	B010100	B029999X	COIL,RF:0.3UH	80009	108-0328-00
A2Q2105	151-0190-00	XB030000		TRANSISTOR:SILICON,NPN	07263	S032677
A2Q2115	151-0190-00	XB030000		TRANSISTOR:SILICON,NPN	07263	S032677
A2Q2130	151-0190-00	B010100	B029999X	TRANSISTOR:SILICON,NPN	07263	S032677
A2Q2140	151-0190-00	B010100	B029999X	TRANSISTOR:SILICON,NPN	07263	S032677
A2Q2306	151-0190-00	XB030000		TRANSISTOR:SILICON,NPN	07263	S032677
A2Q2308	151-0190-00	XB030000		TRANSISTOR:SILICON,NPN	07263	S032677
A2R2005	311-1238-00	B010100	B029999X	RES.,VAR,NONWIR:5K OHM,10%,0.50W	73138	72X-27-0-502K

http://manoman.sqhill.com

Component No.	Tektronix Part No.	Serial/Model No. Eff	Dscont	Name & Description	Mfr Code	Mfr Part Number
A2R2016	321-0251-00	XB030000		RES.,FXD,FILM:4.02K OHM,1%,0.125W	91637	MFF1816G40200F
A2R2017	321-0250-00	XB030000		RES.,FXD,FILM:3.92K OHM,1%,0.125W	91637	MFF1816G39200F
A2R2025	321-0160-00	B010100	B029999	RES.,FXD,FILM:453 OHM,1%,0.125W	91637	MFF1816G453R0F
A2R2025	311-1238-00	B030000		RES.,VAR,NONWIR:5K OHM,10%,0.50W	73138	72X-27-0-502K
A2R2029	315-0470-00	B010100	B029999X	RES.,FXD,CMPSN:47 OHM,5%,0.25W	01121	CB4705
A2R2030	311-1245-00	B010100	B029999X	RES.,VAR,NONWIR:10K OHM,10%,0.50W	73138	72-28-0
A2R2035	311-1237-00	B010100	B029999X	RES.,VAR,NONWIR:1K OHM,10%,0.50W	32997	3386X-T07-102
A2R2045	315-0133-00	XB030000		RES.,FXD,CMPSN:13K OHM,5%,0.25W	01121	CB1335
A2R2054	321-0080-00	XB030000		RES.,FXD,FILM:66.5 OHM,1%,0.125W	91637	MFF1816G66R50F
A2R2055	321-0175-00	XB030000		RES.,FXD,FILM:649 OHM,1%,0.125W	91637	MFF1816G649R0F
A2R2057	323-0127-00	XB030000		RES.,FXD,FILM:205 OHM,1%,0.50W	91637	MFF1226G205R0F
A2R2058	323-0155-00	XB030000		RES.,FXD,FILM:402 OHM,1%,0.50W	75042	CECT0-4020F
A2R2063	323-0127-00	B010100	B029999X	RES.,FXD,FILM:205 OHM,1%,0.50W	91637	MFF1226G205R0F
A2R2073	315-0473-00			RES.,FXD,CMPSN:47K OHM,5%,0.25W	01121	CB4735
A2R2074	323-0055-00	XB030000		RES.,FXD,FILM:36.5 OHM,1%,0.5W	75042	CECT0-35R50F
A2R2075	315-0473-00	XB030000		RES.,FXD,CMPSN:47K OHM,5%,0.25W	01121	CB4735
A2R2103	315-0472-00	XB030000		RES.,FXD,CMPSN:4.7K OHM,5%,0.25W	01121	CB4725
A2R2104	315-0392-00	XB030000		RES.,FXD,CMPSN:3.9K OHM,5%,0.25W	01121	CB3925
A2R2105	321-0188-00	B010100	B029999X	RES.,FXD,FILM:887 OHM,1%,0.125W	91637	MFF1816G887R0F
A2R2106	321-0227-00	B010100	B029999X	RES.,FXD,FILM:2.26K OHM,1%,0.125W	91637	MFF1816G22600F
A2R2107	321-0198-00	B010100	B029999X	RES.,FXD,FILM:1.13K OHM,1%,0.125W	91637	MFF1816G11300F
A2R2108	321-0085-00	XB030000		RES.,FXD,FILM:75 OHM,1%,0.125W	91637	MFF1816G75R00F
A2R2113	315-0270-00	B010100	B029999X	RES.,FXD,CMPSN:27 OHM,5%,0.25W	01121	CB2705
A2R2115	323-0140-00	B010100	B029999X	RES.,FXD,FILM:280 OHM,1%,0.50W	75042	CECT0-2800F
A2R2117	311-1236-00	XB030000		RES.,VAR,NONWIR:250 OHM,10%,0.50W	73138	72X-22-0-251K
A2R2119	321-0193-00	XB030000		RES.,FXD,FILM:1K OHM,1%,0.125W	91637	MFF1816G10000F
A2R2123	321-0183-00	XB030000		RES.,FXD,FILM:787 OHM,1%,0.125W	91637	MFF1816G787R0F
A2R2124	321-0223-00	XB030000		RES.,FXD,FILM:2.05K OHM,1%,0.125W	91637	MFF1816G20500F
A2R2125	321-0198-00	XB030000		RES.,FXD,FILM:1.13K OHM,1%,0.125W	91637	MFF1816G11300F
A2R2127	315-0270-00	XB030000		RES.,FXD,CMPSN:27 OHM,5%,0.25W	01121	CB2705
A2R2134	315-0561-00	B010100	B029999X	RES.,FXD,CMPSN:560 OHM,5%,0.25W	01121	CB5615
A2R2135	323-0140-00	XB030000		RES.,FXD,FILM:280 OHM,1%,0.50W	75042	CECT0-2800F
A2R2136	315-0121-00	B010100	B029999X	RES.,FXD,CMPSN:120 OHM,5%,0.25W	01121	CB1215
A2R2137	323-0140-00	XB030000		RES.,FXD,FILM:280 OHM,1%,0.50W	75042	CECT0-2800F
A2R2138	321-0061-00	B010100	B029999X	RES.,FXD,FILM:42.2 OHM,1%,0.125W	91637	MFF1816G42R20F
A2R2142	315-0561-00	XB030000		RES.,FXD,CMPSN:560 OHM,5%,0.25W	01121	CB5615
A2R2143	321-0061-00	XB030000		RES.,FXD,FILM:42.2 OHM,1%,0.125W	91637	MFF1816G42R20F
A2R2144	315-0152-00	B010100	B029999X	RES.,FXD,CMPSN:1.5K OHM,5%,0.25W	01121	CB1525
A2R2146	321-0160-00	B010100	B029999X	RES.,FXD,FILM:453 OHM,1%,0.125W	91637	MFF1816G453R0F
A2R2151	315-0202-00	B010100	B029999X	RES.,FXD,CMPSN:2K OHM,5%,0.25W	01121	CB2025
A2R2153	321-0080-00	B010100	B029999X	RES.,FXD,FILM:66.5 OHM,1%,0.125W	91637	MFF1816G66R50F
A2R2154	323-0155-00	XB030000		RES.,FXD,FILM:402 OHM,1%,0.50W	75042	CECT0-4020F
A2R2155	321-0175-00	B010100	B029999X	RES.,FXD,FILM:649 OHM,1%,0.125W	91637	MFF1816G649R0F
A2R2156	321-0052-00	XB030000		RES.,FXD,FILM:34 OHM,1%,0.125W	91637	MFF1816G34R00F
A2R2164	323-0155-00	B010100	B029999X	RES.,FXD,FILM:402 OHM,1%,0.50W	75042	CECT0-4020F
A2R2165	321-0155-00	B010100	B029999X	RES.,FXD,FILM:402 OHM,1%,0.125W	91637	MFF1816G402R0F
A2R2166	321-0052-00	B010100	B029999X	RES.,FXD,FILM:34 OHM,1%,0.125W	91637	MFF1816G34R00F
A2R2168	315-0101-00			RES.,FXD,CMPSN:100 OHM,5%,0.25W	01121	CB1015
A2R2172	323-0055-00	B010100	B029999X	RES.,FXD,FILM:36.5 OHM,1%,0.5W	75042	CECT0-35R50F
A2R2173	315-0473-00	B010100	B029999X	RES.,FXD,CMPSN:47K OHM,5%,0.25W	01121	CB4735
A2R2185	308-0758-00	XB030000		RES.,FXD,WW:430 OHM,1%,7W	14193	SP1151S-430R0F
A2R2202	321-0068-00	B010100	B029999X	RES.,FXD,FILM:49.9 OHM,1%,0.125W	91637	MFF1816G49R90F
A2R2206	321-0068-00	B010100	B029999X	RES.,FXD,FILM:49.9 OHM,1%,0.125W	91637	MFF1816G49R90F
A2R2207	321-0001-00	XB030000		RES.,FXD,FILM:10 OHM,1%,0.125W	75042	CEAT0-10R00F
A2R2208	321-0001-00	XB030000		RES.,FXD,FILM:10 OHM,1%,0.125W	75042	CEAT0-10R00F
A2R2212	321-0193-00	XB030000		RES.,FXD,FILM:1K OHM,1%,0.125W	91637	MFF1816G10000F
A2R2214	321-0068-00	XB030000		RES.,FXD,FILM:49.9 OHM,1%,0.125W	91637	MFF1816G49R90F

http://manoman.sqhill.com

Component No.	Tektronix Part No.	Serial/Model No. Eff	Dscont	Name & Description	Mfr Code	Mfr Part Number
A2R2218	321-0068-00	XB030000		RES.,FXD,FILM:49.9 OHM,1%,0.125W	91637	MFF1816G49R90F
A2R2232	315-0121-00	B010100	B029999X	RES.,FXD,CMPSN:120 OHM,5%,0.25W	01121	CB1215
A2R2242	315-0270-00	B010100	B029999X	RES.,FXD,CMPSN:27 OHM,5%,0.25W	01121	CB2705
A2R2243	311-1236-00	XB030000		RES.,VAR,NONWIR:250 OHM,10%,0.50W	73138	72X-22-0-251K
A2R2244	315-0270-00	XB030000		RES.,FXD,CMPSN:27 OHM,5%,0.25W	01121	CB2705
A2R2245	311-1236-00	B010100	B029999X	RES.,VAR,NONWIR:250 OHM,10%,0.50W	73138	72X-22-0-251K
A2R2246	315-0270-00	XB030000		RES.,FXD,CMPSN:27 OHM,5%,0.25W	01121	CB2705
A2R2247	321-0147-00	B010100	B029999	RES.,FXD,FILM:332 OHM,1%,0.125W	91637	MFF1816G332R0F
A2R2247	321-0139-00	B030000		RES.,FXD,FILM:274 OHM,1%,0.125W	91637	MFF1816G274R0F
A2R2262	315-0100-00	XB030000		RES.,FXD,CMPSN:10 OHM,5%,0.25W	01121	CB1005
A2R2267	315-0100-00	B010100	B029999X	RES.,FXD,CMPSN:10 OHM,5%,0.25W	01121	CB1005
A2R2268	315-0100-00	XB030000		RES.,FXD,CMPSN:10 OHM,5%,0.25W	01121	CB1005
A2R2284	308-0758-00	XB030000		RES.,FXD,WW:430 OHM,1%,7W	14193	SP1151S-430R0F
A2R2285	308-0758-00	B010100	B029999X	RES.,FXD,WW:430 OHM,1%,7W	14193	SP1151S-430R0F
A2R2304	321-0147-00	XB030000		RES.,FXD,FILM:332 OHM,1%,0.125W	91637	MFF1816G332R0F
A2R2305	321-0147-00	XB030000		RES.,FXD,FILM:332 OHM,1%,0.125W	91637	MFF1816G332R0F
A2R2306	315-0750-00	B010100	B029999X	RES.,FXD,CMPSN:75 OHM,5%,0.25W	01121	CB7505
A2R2308	315-0470-00	B010100	B029999X	RES.,FXD,CMPSN:47 OHM,5%,0.25W	01121	CB4705
A2R2311	323-0140-00	B010100	B029999X	RES.,FXD,FILM:280 OHM,1%,0.50W	75042	CECT0-2800F
A2R2312	311-1236-00	B010100	B029999X	RES.,VAR,NONWIR:250 OHM,10%,0.50W	73138	72X-22-0-251K
A2R2318	315-0621-00	B010100	B029999	RES.,FXD,CMPSN:620 OHM,5%,0.25W	01121	CB6215
A2R2318	315-0331-00	B030000		RES.,FXD,CMPSN:330 OHM,5%,0.25W	01121	CB3315
A2R2323	315-0750-00	XB030000		RES.,FXD,CMPSN:75 OHM,5%,0.25W	01121	CB7505
A2R2325	311-1236-00	XB030000		RES.,VAR,NONWIR:250 OHM,10%,0.50W	73138	72X-22-0-251K
A2R2326	315-0470-00	XB030000		RES.,FXD,CMPSN:47 OHM,5%,0.25W	01121	CB4705
A2R2328	315-0470-00	XB030000		RES.,FXD,CMPSN:47 OHM,5%,0.25W	01121	CB4705
A2R2331	321-0061-00	B010100	B029999X	RES.,FXD,FILM:42.2 OHM,1%,0.125W	91637	MFF1816G42R20F
A2R2333	315-0561-00	B010100	B029999X	RES.,FXD,CMPSN:560 OHM,5%,0.25W	01121	CB5615
A2R2335	315-0561-00	XB030000		RES.,FXD,CMPSN:560 OHM,5%,0.25W	01121	CB5615
A2R2336	315-0270-00	B010100	B029999X	RES.,FXD,CMPSN:27 OHM,5%,0.25W	01121	CB2705
A2R2337	321-0061-00	XB030000		RES.,FXD,FILM:42.2 OHM,1%,0.125W	91637	MFF1816G42R20F
A2R2344	315-0470-00	XB030000		RES.,FXD,CMPSN:47 OHM,5%,0.25W	01121	CB4705
A2R2352	315-0470-00	B010100	B029999X	RES.,FXD,CMPSN:47 OHM,5%,0.25W	01121	CB4705
A2R2354	315-0470-00	XB030000		RES.,FXD,CMPSN:47 OHM,5%,0.25W	01121	CB4705
A2R2356	321-0052-00	XB030000		RES.,FXD,FILM:34 OHM,1%,0.125W	91637	MFF1816G34R00F
A2R2357	323-0155-00	XB030000		RES.,FXD,FILM:402 OHM,1%,0.50W	75042	CECT0-4020F
A2R2358	323-0155-00	XB030000		RES.,FXD,FILM:402 OHM,1%,0.50W	75042	CECT0-4020F
A2R2361	321-0052-00	B010100	B029999X	RES.,FXD,FILM:34 OHM,1%,0.125W	91637	MFF1816G34R00F
A2R2363	323-0155-00	B010100	B029999X	RES.,FXD,FILM:402 OHM,1%,0.50W	75042	CECT0-4020F
A2R2367	315-0100-00	B010100	B029999X	RES.,FXD,CMPSN:10 OHM,5%,0.25W	01121	CB1005
A2R2385	308-0758-00	B010100	B029999X	RES.,FXD,WW:430 OHM,1%,7W	14193	SP1151S-430R0F
A2R2413	315-0621-00	B010100	B029999X	RES.,FXD,CMPSN:620 OHM,5%,0.25W	01121	CB6215
A2R2414	321-0147-00	B010100	B029999X	RES.,FXD,FILM:332 OHM,1%,0.125W	91637	MFF1816G332R0F
A2R2422	315-0102-00	B010100	B029999X	RES.,FXD,CMPSN:1K OHM,5%,0.25W	01121	CB1025
A2R2425	321-0147-00	B010100	B011167	RES.,FXD,FILM:332 OHM,1%,0.125W	91637	MFF1816G332R0F
A2R2425	321-0152-00	B011168	B029999X	RES.,FXD,FILM:374 OHM,1%,0.125W	91637	MFF1816G374R0F
A2R2426	311-1564-00	XB030000		RES.,VAR,NONWIR:TRMR,500 OHM,0.5W	73138	91-86-0
A2R2432	311-1560-00	XB030000		RES.,VAR,NONWIR:5K OHM,20%,0.50W	73138	91-82-0
A2R2436	311-1559-00	XB030000		RES.,VAR,NONWIR:10K OHM,20%,0.50W	73138	91-81-0
A2R2445	315-0470-00	B010100	B029999X	RES.,FXD,CMPSN:47 OHM,5%,0.25W	01121	CB4705
A2R2446	311-1559-00	XB030000		RES.,VAR,NONWIR:10K OHM,20%,0.50W	73138	91-81-0
A2R2447	321-0178-00	XB030000		RES.,FXD,FILM:698 OHM,1%,0.125W	91637	MFF1816G698R0F
A2R2448	311-1558-00	B010100	B029999	RES.,VAR,NONWIR:20K OHM,20%,0.50W	73138	91-80-0
A2R2448	311-1556-00	B030000		RES.,VAR,NONWIR:50K OHM,20%,0.50W	73138	91-78-0
A2R2451	321-0178-00	B010100	B029999X	RES.,FXD,FILM:698 OHM,1%,0.125W	91637	MFF1816G698R0F
A2R2455	321-0178-00	XB030000		RES.,FXD,FILM:698 OHM,1%,0.125W	91637	MFF1816G698R0F
A2R2461	323-0155-00	B010100	B029999X	RES.,FXD,FILM:402 OHM,1%,0.50W	75042	CECT0-4020F

http://manoman.sqhill.com

Component No.	Tektronix Part No.	Serial/Model No. Eff	Dscont	Name & Description	Mfr Code	Mfr Part Number
A2R2463	321-0178-00	B010100	B029999X	RES.,FXD,FILM:698 OHM,1%,0.125W	91637	MFF1816G698R0F
A2R2465	315-0473-00	XB030000		RES.,FXD,CMPSN:47K OHM,5%,0.25W	01121	CB4735
A2R2466	315-0473-00	XB030000		RES.,FXD,CMPSN:47K OHM,5%,0.25W	01121	CB4735
A2R2467	315-0473-00	B010100	B029999X	RES.,FXD,CMPSN:47K OHM,5%,0.25W	01121	CB4735
A2R2468	315-0473-00	B010100	B029999X	RES.,FXD,CMPSN:47K OHM,5%,0.25W	01121	CB4735
A2R2472	315-0202-00	XB030000		RES.,FXD,CMPSN:2K OHM,5%,0.25W	01121	CB2025
A2R2475	315-0202-00	B010100	B029999X	RES.,FXD,CMPSN:2K OHM,5%,0.25W	01121	CB2025
A2R2476	315-0821-00	XB030000		RES.,FXD,CMPSN:820 OHM,5%,0.25W	01121	CB8215
A2R2520	311-1564-00	B010100	B029999X	RES.,VAR,NONWIR:TRMR,500 OHM,0.5W	73138	91-86-0
A2R2530	311-1560-00	B010100	B029999X	RES.,VAR,NONWIR:5K OHM,20%,0.50W	73138	91-82-0
A2R2535	311-1559-00	B010100	B029999X	RES.,VAR,NONWIR:10K OHM,20%,0.50W	73138	91-81-0
A2R2540	311-1559-00	B010100	B029999X	RES.,VAR,NONWIR:10K OHM,20%,0.50W	73138	91-81-0
A2R2550	311-1558-00	B010100	B029999X	RES.,VAR,NONWIR:20K OHM,20%,0.50W	73138	91-80-0
A2RT2304	307-0125-00	B010100	B029999X	RES.,THERMAL:500 OHM,10%,25 DEG C	50157	2D1595
A2RT2333	307-0125-00	XB030000		RES.,THERMAL:500 OHM,10%,25 DEG C	50157	2D1595
A2U2005	156-0067-00	XB030000		MICROCIRCUIT,LI:OPERATIONAL AMPLIFIER	02735	85145
A2U2210	155-0078-10	B010100	B029999X	MICROCIRCUIT,LI:ML,VERTICAL AMPLIFIER	80009	155-0078-10
A2U2225	155-0078-10	XB030000		MICROCIRCUIT,LI:ML,VERTICAL AMPLIFIER	80009	155-0078-10
A2U2255	155-0115-00	XB030000		MICROCIRCUIT,LI:CRT VERT DEFLECTION DRIVER	80009	155-0115-00
A2U2260	155-0115-00	B010100	B029999X	MICROCIRCUIT,LI:CRT VERT DEFLECTION DRIVER	80009	155-0115-00
A2U2385	156-0067-00	XB030000		MICROCIRCUIT,LI:OPERATIONAL AMPLIFIER	02735	85145
A2U2480	156-0067-00	B010100	B029999X	MICROCIRCUIT,LI:OPERATIONAL AMPLIFIER	02735	85145
A2VR2211	152-0195-00	B010100	B029999X	SEMICOND DEVICE:ZENER,0.4W,5.1V,5%	04713	SZ11755
A2VR2212	152-0278-00	B010100	B029999X	SEMICOND DEVICE:ZENER,0.4W,3V,5%	04713	SZG35009K20
A2VR2215	152-0195-00	B010100	B029999X	SEMICOND DEVICE:ZENER,0.4W,5.1V,5%	04713	SZ11755
A2VR2232	152-0195-00	XB030000		SEMICOND DEVICE:ZENER,0.4W,5.1V,5%	04713	SZ11755
A2VR2234	152-0278-00	XB030000		SEMICOND DEVICE:ZENER,0.4W,3V,5%	04713	SZG35009K20
A2VR2238	152-0195-00	XB030000		SEMICOND DEVICE:ZENER,0.4W,5.1V,5%	04713	SZ11755
A2W2472	131-0566-00	B010100	B029999X	BUS CONDUCTOR:DUMMY RES,2.375,22 AWG	55210	L-2007-1

http://manoman.sqhill.com

Component No.	Tektronix Part No.	Serial/Model No. Eff	Dscont	Name & Description	Mfr Code	Mfr Part Number
A3	----- -----			CKT BOARD ASSY:ATTENUATOR		
A3C30	----- -----			(SEE CHASSIS PARTS)		
A3C31	----- -----			(SEE CHASSIS PARTS)		
A3C32	----- -----			(SEE CHASSIS PARTS)		
A3C33	----- -----			(SEE CHASSIS PARTS)		
A3C34	----- -----			(SEE CHASSIS PARTS)		
A3C35	----- -----			(SEE CHASSIS PARTS)		
A3C36	----- -----			(SEE CHASSIS PARTS)		
A3C37	----- -----			(SEE CHASSIS PARTS)		
A3C3042	283-0156-00			CAP.,FXD,CER DI:1000PF,+100-0%,200V	72982	8111A208Z5U0102Z
A3R3014	315-0105-00			RES.,FXD,CMPSN:1M OHM,5%,0.25W	01121	CB1055
A3R3015	315-0220-00			RES.,FXD,CMPSN:22 OHM,5%,0.25W	01121	CB2205
A3R3030	317-0100-00	B010100	B010239	RES.,FXD,CMPSN:10 OHM,5%,0.125W	01121	BB1005
A3R3030	317-0220-00	B010240		RES.,FXD,CMPSN:22 OHM,5%,0.125W	01121	BB2205
A3R3032	315-0360-00			RES.,FXD,CMPSN:36 OHM,5%,0.25W	01121	CB3605
A3R3033	317-0220-00	B010100	B010872	RES.,FXD,CMPSN:22 OHM,5%,0.125W	01121	BB2205
A3R3033	317-0100-00	B010873		RES.,FXD,CMPSN:10 OHM,5%,0.125W	01121	BB1005
A3R3036	317-0100-00			RES.,FXD,CMPSN:10 OHM,5%,0.125W	01121	BB1005
A3R3039	321-0481-00			RES.,FXD,FILM:1M OHM,1%,0.125W	24546	NA4D1004F
A3R3042	317-0474-00			RES.,FXD,CMPSN:470K OHM,5%,0.125W	01121	BB4745
A3R3045	315-0300-00			RES.,FXD,CMPSN:30 OHM,5%,0.25W	01121	CB3005

http://manoman.sqhill.com

Component No.	Tektronix Part No.	Serial/Model No. Eff	Dscont	Name & Description	Mfr Code	Mfr Part Number
A4	----- -----			CKT BOARD ASSY:INTERFACE		
A4C4003	290-0536-00			CAP.,FXD,ELCTLT:10UF,20%,25V	90201	TDC106M025FL
A4C4005	283-0002-00			CAP.,FXD,CER DI:0.01UF,+80-20%,500V	72982	811-546E103Z
A4C4006	290-0316-00			CAP.,FXD,ELCTLT:47UF,20%,35V	56289	150D476X0035S2
A4C4010	281-0622-00			CAP.,FXD,CER DI:47PF,1%,500V	72982	308-000C0G0470F
A4C4012	283-0203-00			CAP.,FXD,CER DI:0.47UF,20%,50V	72982	8131N075 E474M
A4C4016	285-0509-01			CAP.,FXD,PLSTC:0.0068UF,20%,5000V	56289	430P507
A4C4020	285-0509-01			CAP.,FXD,PLSTC:0.0068UF,20%,5000V	56289	430P507
A4C4025	285-0509-01			CAP.,FXD,PLSTC:0.0068UF,20%,5000V	56289	430P507
A4C4036	281-0773-00			CAP.,FXD,CER DI:0.01UF,10%,100V	72982	8005H9AADW5R103K
A4C4037	283-0003-00			CAP.,FXD,CER DI:0.01UF,+80-20%,150V	72982	855-558Z5U-103Z
A4C4038	285-1040-00			CAP.,FXD,PLSTC:0.0012UF,10%,4000V	56289	430P522
A4C4039	283-0003-00			CAP.,FXD,CER DI:0.01UF,+80-20%,150V	72982	855-558Z5U-103Z
A4C4043	281-0773-00			CAP.,FXD,CER DI:0.01UF,10%,100V	72982	8005H9AADW5R103K
A4C4104	290-0164-00			CAP.,FXD,ELCTLT:1UF,+50-10%,150V	56289	500D105F150BA7
A4C4107	283-0178-00			CAP.,FXD,CER DI:0.1UF,+80-20%,100V	72982	8131N145651 104Z
A4C4113	283-0002-00			CAP.,FXD,CER DI:0.01UF,+80-20%,500V	72982	811-546E103Z
A4C4114	283-0057-00			CAP.,FXD,CER DI:0.1UF,+80-20%,200V	56289	274C10
A4C4116	283-0057-00			CAP.,FXD,CER DI:0.1UF,+80-20%,200V	56289	274C10
A4C4117	285-1040-00			CAP.,FXD,PLSTC:0.0012UF,10%,4000V	56289	430P522
A4C4118	285-0507-01			CAP.,FXD,PPR DI:0.0047UF,20%,6000V	56289	430P472060
A4C4126	285-1040-00			CAP.,FXD,PLSTC:0.0012UF,10%,4000V	56289	430P522
A4C4150	283-0328-00			CAP.,FXD,CER DI:0.03UF,+80-20%,200V	72982	8131N225Z5U0303Z
A4C4153	283-0003-00			CAP.,FXD,CER DI:0.01UF,+80-20%,150V	72982	855-558Z5U-103Z
A4C4159	281-0773-00			CAP.,FXD,CER DI:0.01UF,10%,100V	72982	8005H9AADW5R103K
A4C4164	281-0816-00			CAP.,FXD,CER DI:82PF,5%,100V	16546	C40A820J
A4C4175	281-0812-00			CAP.,FXD,CER DI:1000PF,10%,100V	72982	8035D9AADX7R102K
A4C4187	285-0686-00			CAP.,FXD,PLSTC:0.068UF,10%,100V	56289	410P68391
A4C4192	281-0767-00			CAP.,FXD,CER DI:330PF,20%,100V	12969	CGB331MEX
A4C4203	290-0535-00			CAP.,FXD,ELCTLT:33UF,20%,10V	56289	196D336X0010KA1
A4C4204	281-0775-00			CAP.,FXD,CER DI:0.1UF,20%,50V	72982	8005D9AABZ5U104M
A4C4216	283-0002-00			CAP.,FXD,CER DI:0.01UF,+80-20%,500V	72982	811-546E103Z
A4C4217	281-0064-00			CAP.,VAR,PLSTC:0.25-1.5PF,600V	72982	530-002
A4C4226	281-0788-00			CAP.,FXD,CER DI:470PF,10%,100V	72982	8005H9AADW5R471K
A4C4229	283-0198-00			CAP.,FXD,CER DI:0.22UF,20%,50V	72982	8121N083Z5U0224M
A4C4246	281-0168-00			CAP.,VAR,AIR DI:1.3-5.4PF,250V	74970	187-0103-035
A4C4247	281-0168-00			CAP.,VAR,AIR DI:1.3-5.4PF,250V	74970	187-0103-035
A4C4262	283-0024-00			CAP.,FXD,CER DI:0.1UF,+80-20%,50V	72982	8121N083Z5U0104Z
A4C4271	281-0812-00			CAP.,FXD,CER DI:1000PF,10%,100V	72982	8035D9AADX7R102K
A4C4283	283-0004-00			CAP.,FXD,CER DI:0.02UF,+80-20%,150V	72982	855-558Z5V0203Z
A4C4285	281-0775-00			CAP.,FXD,CER DI:0.1UF,20%,50V	72982	8005D9AABZ5U104M
A4C4288	283-0004-00			CAP.,FXD,CER DI:0.02UF,+80-20%,150V	72982	855-558Z5V0203Z
A4C4291	281-0762-00			CAP.,FXD,CER DI:27PF,20%,100V	72982	8035D9AADC0G270M
A4C4292	290-0532-00			CAP.,FXD,ELCTLT:150UF,20%,6V	90201	TDC157M006WLC
A4C4303	290-0305-00			CAP.,FXD,ELCTLT:3UF,20%,150V	56289	109D305X0150C2
A4C4305	281-0814-00			CAP.,FXD,CER DI:100PF,10%,100V	04222	GC70-1-A101K
A4C4306	281-0783-00			CAP.,FXD,CER DI:0.1UF,20%,100V	72982	8045-D-Z5U104M
A4C4307	281-0774-00			CAP.,FXD,CER DI:0.022UF,20%,100V	72982	8045A9ABDZ5U223M
A4C4311	281-0773-00			CAP.,FXD,CER DI:0.01UF,10%,100V	72982	8005H9AADW5R103K
A4C4326	290-0535-00			CAP.,FXD,ELCTLT:33UF,20%,10V	56289	196D336X0010KA1
A4C4327	290-0149-00			CAP.,FXD,ELCTLT:5UF,+75-10%,150V	56289	30D505G150DD4
A4C4331	290-0529-00			CAP.,FXD,ELCTLT:47UF,20%,20V	05397	T368C476M020AZ
A4C4341	283-0328-00			CAP.,FXD,CER DI:0.03UF,+80-20%,200V	72982	8131N225Z5U0303Z
A4C4351	281-0773-00			CAP.,FXD,CER DI:0.01UF,10%,100V	72982	8005H9AADW5R103K
A4C4352	283-0003-00			CAP.,FXD,CER DI:0.01UF,+80-20%,150V	72982	855-558Z5U-103Z
A4C4361	281-0816-00			CAP.,FXD,CER DI:82PF,5%,100V	16546	C40A820J
A4C4362	281-0775-00			CAP.,FXD,CER DI:0.1UF,20%,50V	72982	8005D9AABZ5U104M

http://manoman.sqhill.com

Component No.	Tektronix Part No.	Serial/Model No. Eff	Dscont	Name & Description	Mfr Code	Mfr Part Number
A4C4375	281-0775-00			CAP.,FXD,CER DI:0.1UF,20%,50V	72982	8005D9AABZ5U104M
A4C4391	281-0775-00			CAP.,FXD,CER DI:0.1UF,20%,50V	72982	8005D9AABZ5U104M
A4C4398	281-0773-00			CAP.,FXD,CER DI:0.01UF,10%,100V	72982	8005H9AADW5R103K
A4C4407	281-0775-00			CAP.,FXD,CER DI:0.1UF,20%,50V	72982	8005D9AABZ5U104M
A4C4419	290-0571-00			CAP.,FXD,ELCTLT:5000UF,+100-0%,25V	90201	PFP2U-36043
A4C4429	290-0638-00			CAP.,FXD,ELCTLT:1200UF,+75-10%,100V	56289	68D10529
A4C4439	290-0670-00			CAP.,FXD,ELCTLT:550UF,+75-10%,100V	56289	68D10512
A4C4441	290-0527-00			CAP.,FXD,ELCTLT:15UF,20%,20V	90201	TDC156M020FL
A4C4442	283-0178-00			CAP.,FXD,CER DI:0.1UF,+80-20%,100V	72982	8131N145651 104Z
A4C4461	290-0807-00			CAP.,FXD,ELCTLT:1000UF,+100-10%,10VDC	90201	TT102N010E1C3P
A4C4472	281-0774-00			CAP.,FXD,CER DI:0.022UF,20%,100V	72982	8045A9ABDZ5U223M
A4C4473	281-0767-00			CAP.,FXD,CER DI:330PF,20%,100V	12969	CGB331MEX
A4C4476	290-0527-00			CAP.,FXD,ELCTLT:15UF,20%,20V	90201	TDC156M020FL
A4C4477	281-0756-00			CAP.,FXD,CER DI:2.2PF,0.5%,200V	72982	0314022C0K0229D
A4C4487	281-0788-00			CAP.,FXD,CER DI:470PF,10%,100V	72982	8005H9AADW5R471K
A4C4497	281-0774-00			CAP.,FXD,CER DI:0.022UF,20%,100V	72982	8045A9ABDZ5U223M
A4C4521	290-0584-00			CAP.,FXD,ELCTLT:5500UF,+100-10%,30V	90201	PFP552GN4A3P2
A4C4531	290-0571-00			CAP.,FXD,ELCTLT:5000UF,+100-0%,25V	90201	PFP20-36043
A4C4532	281-0580-00			CAP.,FXD,CER DI:470PF,10%,500V	04222	7001-1374
A4C4533	281-0775-00			CAP.,FXD,CER DI:0.1UF,20%,50V	72982	8005D9AABZ5U104M
A4C4554	281-0760-00			CAP.,FXD,CER DI:22PF,10%,500V	72982	0314021 C0G0220K
A4C4563	281-0785-00			CAP.,FXD,CER DI:68PF,10%,100V	72982	8035D2AADC0G680K
A4C4567	281-0774-00			CAP.,FXD,CER DI:0.022UF,20%,100V	72982	8045A9ABDZ5U223M
A4C4568	281-0787-00			CAP.,FXD,CER DI:15PF,5%,500V	72982	0314021C0G0150J
A4C4569	281-0762-00			CAP.,FXD,CER DI:27PF,20%,100V	72982	8035D9AADC0G270M
A4C4571	290-0512-00			CAP.,FXD,ELCTLT:22UF,20%,15V	56289	196D226X0015KA1
A4C4572	290-0527-00			CAP.,FXD,ELCTLT:15UF,20%,20V	90201	TDC156M020FL
A4C4575	283-0178-00			CAP.,FXD,CER DI:0.1UF,+80-20%,100V	72982	8131N145651 104Z
A4C4585	281-0759-00			CAP.,FXD,CER DI:22PF,10%,100V	72982	8035D9AADC1G220K
A4C4592	281-0814-00			CAP.,FXD,CER DI:100PF,10%,100V	04222	GC70-1-A101K
A4C4593	281-0814-00			CAP.,FXD,CER DI:100PF,10%,100V	04222	GC70-1-A101K
A4C4594	281-0774-00			CAP.,FXD,CER DI:0.022UF,20%,100V	72982	8045A9ABDZ5U223M
A4C4597	281-0771-00			CAP.,FXD,CER DI:0.0022UF,20%,200V	72982	314-0222Z5U0222M
A4C4598	281-0760-00			CAP.,FXD,CER DI:22PF,10%,500V	72982	0314021 C0G0220K
A4CR4002	152-0141-02			SEMICOND DEVICE:SILICON,30V,150MA	01295	1N4152R
A4CR4004	152-0141-02			SEMICOND DEVICE:SILICON,30V,150MA	01295	1N4152R
A4CR4005	152-0141-02			SEMICOND DEVICE:SILICON,30V,150MA	01295	1N4152R
A4CR4010	152-0141-02			SEMICOND DEVICE:SILICON,30V,150MA	01295	1N4152R
A4CR4021	152-0409-00			SEMICOND DEVICE:SILICON,12,000V,5MA	80009	152-0409-00
A4CR4104	152-0141-02			SEMICOND DEVICE:SILICON,30V,150MA	01295	1N4152R
A4CR4105	152-0141-02			SEMICOND DEVICE:SILICON,30V,150MA	01295	1N4152R
A4CR4108	152-0107-00			SEMICOND DEVICE:SILICON,400V,400MA	01295	G727
A4CR4111	152-0061-00			SEMICOND DEVICE:SILICON,175V,100MA	07263	FDH2161
A4CR4112	152-0061-00			SEMICOND DEVICE:SILICON,175V,100MA	07263	FDH2161
A4CR4115	152-0141-02			SEMICOND DEVICE:SILICON,30V,150MA	01295	1N4152R
A4CR4122	152-0242-00			SEMICOND DEVICE:SILICON,225V,200MA	07263	FDH5004
A4CR4123	152-0242-00			SEMICOND DEVICE:SILICON,225V,200MA	07263	FDH5004
A4CR4144	152-0141-02			SEMICOND DEVICE:SILICON,30V,150MA	01295	1N4152R
A4CR4159	152-0141-02			SEMICOND DEVICE:SILICON,30V,150MA	01295	1N4152R
A4CR4216	152-0061-00			SEMICOND DEVICE:SILICON,175V,100MA	07263	FDH2161
A4CR4218	152-0141-02			SEMICOND DEVICE:SILICON,30V,150MA	01295	1N4152R
A4CR4261A,B	152-0141-02			SEMICOND DEVICE:SILICON,30V,150MA	01295	1N4152R
A4CR4266	152-0322-00			SEMICOND DEVICE:SILICON,15V,HOT CARRIER	50434	5082-2672
A4CR4267	152-0322-00			SEMICOND DEVICE:SILICON,15V,HOT CARRIER	50434	5082-2672
A4CR4285	152-0141-02			SEMICOND DEVICE:SILICON,30V,150MA	01295	1N4152R
A4CR4287	152-0141-02			SEMICOND DEVICE:SILICON,30V,150MA	01295	1N4152R
A4CR4291	152-0141-02			SEMICOND DEVICE:SILICON,30V,150MA	01295	1N4152R

http://manoman.sqhill.com

Component No.	Tektronix Part No.	Serial/Model No. Eff	Dscont	Name & Description	Mfr Code	Mfr Part Number
A4CR4302	152-0141-02			SEMICOND DEVICE:SILICON,30V,150MA	01295	1N4152R
A4CR4303	152-0066-00			SEMICOND DEVICE:SILICON,400V,750MA	14433	LG4016
A4CR4304	152-0061-00			SEMICOND DEVICE:SILICON,175V,100MA	07263	FDH2161
A4CR4311	152-0061-00			SEMICOND DEVICE:SILICON,175V,100MA	07263	FDH2161
A4CR4312	152-0141-02			SEMICOND DEVICE:SILICON,30V,150MA	01295	1N4152R
A4CR4318	152-0141-02			SEMICOND DEVICE:SILICON,30V,150MA	01295	1N4152R
A4CR4321	152-0141-02			SEMICOND DEVICE:SILICON,30V,150MA	01295	1N4152R
A4CR4322	152-0141-02			SEMICOND DEVICE:SILICON,30V,150MA	01295	1N4152R
A4CR4326	152-0304-00			SEMICOND DEVICE:ZENER,0.4W,20V,5%	14433	1N968B
A4CR4328	152-0061-00			SEMICOND DEVICE:SILICON,175V,100MA	07263	FDH2161
A4CR4329	152-0333-00			SEMICOND DEVICE:SILICON,55V,200MA	07263	FDH-6012
A4CR4342	152-0141-02			SEMICOND DEVICE:SILICON,30V,150MA	01295	1N4152R
A4CR4381	152-0141-02			SEMICOND DEVICE:SILICON,30V,150MA	01295	1N4152R
A4CR4396	152-0141-02			SEMICOND DEVICE:SILICON,30V,150MA	01295	1N4152R
A4CR4405	152-0066-00			SEMICOND DEVICE:SILICON,400V,750MA	14433	LG4016
A4CR4406	152-0141-02			SEMICOND DEVICE:SILICON,30V,150MA	01295	1N4152R
A4CR4411	152-0556-00			SEMICOND DEVICE:BRIDGE,50V,2.5A	04713	SDA10271K
A4CR4423	152-0107-00			SEMICOND DEVICE:SILICON,400V,400MA	01295	G727
A4CR4425	152-0066-00			SEMICOND DEVICE:SILICON,400V,750MA	14433	LG4016
A4CR4426	152-0066-00			SEMICOND DEVICE:SILICON,400V,750MA	14433	LG4016
A4CR4431	152-0107-00			SEMICOND DEVICE:SILICON,400V,400MA	01295	G727
A4CR4441	152-0141-02			SEMICOND DEVICE:SILICON,30V,150MA	01295	1N4152R
A4CR4442	152-0153-00			SEMICOND DEVICE:SILICON,15V,50MA	07263	FD7003
A4CR4465	152-0141-02			SEMICOND DEVICE:SILICON,30V,150MA	01295	1N4152R
A4CR4466	152-0141-02			SEMICOND DEVICE:SILICON,30V,150MA	01295	1N4152R
A4CR4467	152-0141-02			SEMICOND DEVICE:SILICON,30V,150MA	01295	1N4152R
A4CR4471	152-0141-02			SEMICOND DEVICE:SILICON,30V,150MA	01295	1N4152R
A4CR4472	152-0141-02			SEMICOND DEVICE:SILICON,30V,150MA	01295	1N4152R
A4CR4515	152-0066-00			SEMICOND DEVICE:SILICON,400V,750MA	14433	LG4016
A4CR4516	152-0556-00			SEMICOND DEVICE:BRIDGE,50V,2.5A	04713	SDA10271K
A4CR4528	152-0556-00			SEMICOND DEVICE:BRIDGE,50V,2.5A	04713	SDA10271K
A4CR4531	152-0488-00			SEMICOND DEVICE:SILICON,200V,1500MA	04713	3N55 FAMILY
A4CR4546	152-0141-02			SEMICOND DEVICE:SILICON,30V,150MA	01295	1N4152R
A4CR4551	152-0141-02			SEMICOND DEVICE:SILICON,30V,150MA	01295	1N4152R
A4CR4552	152-0141-02			SEMICOND DEVICE:SILICON,30V,150MA	01295	1N4152R
A4CR4567	152-0141-02			SEMICOND DEVICE:SILICON,30V,150MA	01295	1N4152R
A4CR4577	152-0141-02			SEMICOND DEVICE:SILICON,30V,150MA	01295	1N4152R
A4CR4581	152-0141-02			SEMICOND DEVICE:SILICON,30V,150MA	01295	1N4152R
A4CR4582	152-0141-02			SEMICOND DEVICE:SILICON,30V,150MA	01295	1N4152R
A4CR4592	152-0141-02			SEMICOND DEVICE:SILICON,30V,150MA	01295	1N4152R
A4CR4597	152-0141-02			SEMICOND DEVICE:SILICON,30V,150MA	01295	1N4152R
A4DS4124	150-0002-00			LAMP,GLOW:0.5 MA 60/125V	74276	NE-2T(T2)
A4DS4125	150-0002-00			LAMP,GLOW:0.5 MA 60/125V	74276	NE-2T(T2)
A4F4501	159-0059-00			FUSE,WIRE LEAD:5A,FAST-BLOW	71400	GFA5
A4F4507	159-0059-00			FUSE,WIRE LEAD:5A,FAST-BLOW	71400	GFA5
A4F4508	159-0016-00			FUSE,CARTRIDGE:3AG,1.5A,250V,FAST-BLOW	71400	AGC 1 1/2
A4J4463	136-0499-12			CONNECTOR,RCPT,:12 CONTACT	00779	4-380949-2
A4J4487	136-0499-14			CONNECTOR,RCPT,:14 CONTACT	00779	4-380949-4
A4L4006	108-0422-00			COIL,RF:FIXED,82UH	80009	108-0422-00
A4L4292	108-0245-00			COIL,RF:3.9UH	76493	B6310-1
A4L4593	108-0328-00			COIL,RF:0.3UH	80009	108-0328-00
A4Q4002	151-0188-00			TRANSISTOR:SILICON,PNP	04713	SPS6868K
A4Q4008	151-0136-00			TRANSISTOR:SILICON,NPN	02735	35495
A4Q4102	----- -----			(SEE CHASSIS PARTS)		
A4Q4103	151-0190-00			TRANSISTOR:SILICON,NPN	07263	S032677
A4Q4105	151-0302-00			TRANSISTOR:SILICON,NPN	07263	S038487
A4Q4106	151-0302-00			TRANSISTOR:SILICON,NPN	07263	S038487

http://manoman.sqhill.com

Component No.	Tektronix Part No.	Serial/Model No. Eff	Dscont	Name & Description	Mfr Code	Mfr Part Number
A4Q4146	151-0406-00			TRANSISTOR:SILICON,PNP	01295	SGC7282
A4Q4150	151-0407-00			TRANSISTOR:SILICON,NPN	04713	SS2456
A4Q4161	151-0302-00			TRANSISTOR:SILICON,NPN	07263	S038487
A4Q4169	151-0190-00			TRANSISTOR:SILICON,NPN	07263	S032677
A4Q4182	151-0342-00			TRANSISTOR:SILICON,PNP	07263	S035928
A4Q4190	----- -----			(SEE CHASSIS PARTS)		
A4Q4196	151-0342-00			TRANSISTOR:SILICON,PNP	07263	S035928
A4Q4213	151-0406-00			TRANSISTOR:SILICON,PNP	01295	SGC7282
A4Q4217	151-0407-00			TRANSISTOR:SILICON,NPN	04713	SS2456
A4Q4222	151-0188-00			TRANSISTOR:SILICON,PNP	04713	SPS6868K
A4Q4223	151-0223-00			TRANSISTOR:SILICON,NPN	04713	SPS8026
A4Q4228	151-0126-00			TRANSISTOR:SILICON,NPN	04713	2N2484
A4Q4233	151-0301-00			TRANSISTOR:SILICON,PNP	04713	2N2907A
A4Q4273	151-0188-00			TRANSISTOR:SILICON,PNP	04713	SPS6868K
A4Q4274	151-0188-00			TRANSISTOR:SILICON,PNP	04713	SPS6868K
A4Q4284	151-0220-00			TRANSISTOR:SILICON,PNP	07263	S036228
A4Q4285	151-0216-00			TRANSISTOR:SILICON,PNP	04713	SPS8803
A4Q4291	151-0164-00			TRANSISTOR:SILICON,PNP	01295	SKB3334
A4Q4301	----- -----			(SEE CHASSIS PARTS)		
A4Q4302	151-0347-00			TRANSISTOR:SILICON,NPN	04713	SPS7951
A4Q4303	151-0347-00			TRANSISTOR:SILICON,NPN	04713	SPS7951
A4Q4311	151-0302-00			TRANSISTOR:SILICON,NPN	07263	S038487
A4Q4312	----- -----			(SEE CHASSIS PARTS)		
A4Q4341	151-0406-00			TRANSISTOR:SILICON,PNP	01295	SGC7282
A4Q4342	151-0407-00			TRANSISTOR:SILICON,NPN	04713	SS2456
A4Q4361	151-0301-00			TRANSISTOR:SILICON,PNP	04713	2N2907A
A4Q4362	151-0188-00			TRANSISTOR:SILICON,PNP	04713	SPS6868K
A4Q4398	151-0190-00	B010100	B029999X	TRANSISTOR:SILICON,NPN	07263	S032677
A4Q4401	----- -----			(SEE CHASSIS PARTS)		
A4Q4403	151-0302-00			TRANSISTOR:SILICON,NPN	07263	S038487
A4Q4404	151-0302-00			TRANSISTOR:SILICON,NPN	07263	S038487
A4Q4425	151-0311-01			TRANSISTOR:SILICON,NPN	80009	151-0311-01
A4Q4431	151-0347-00			TRANSISTOR:SILICON,NPN	04713	SPS7951
A4Q4465	151-0188-00			TRANSISTOR:SILICON,PNP	04713	SPS6868K
A4Q4475	151-0188-00			TRANSISTOR:SILICON,PNP	04713	SPS6868K
A4Q4481	151-0190-00			TRANSISTOR:SILICON,NPN	07263	S032677
A4Q4482	151-0190-00			TRANSISTOR:SILICON,NPN	07263	S032677
A4Q4491	151-0190-00			TRANSISTOR:SILICON,NPN	07263	S032677
A4Q4492	151-0190-00			TRANSISTOR:SILICON,NPN	07263	S032677
A4Q4497	151-0283-00			TRANSISTOR:SILICON,NPN	07263	S032790
A4Q4498	151-1025-00			TRANSISTOR:SILICON,JFE,N-CHANNEL	01295	SFB8129
A4Q4545	151-0188-00			TRANSISTOR:SILICON,PNP	04713	SPS6868K
A4Q4554	151-0220-00			TRANSISTOR:SILICON,PNP	07263	S036228
A4Q4562	151-0220-00			TRANSISTOR:SILICON,PNP	07263	S036228
A4Q4563	151-0188-00			TRANSISTOR:SILICON,PNP	04713	SPS6868K
A4Q4564	151-0188-00			TRANSISTOR:SILICON,PNP	04713	SPS6868K
A4Q4565	151-0283-00			TRANSISTOR:SILICON,NPN	07263	S032790
A4Q4566	151-1025-00			TRANSISTOR:SILICON,JFE,N-CHANNEL	01295	SFB8129
A4Q4570	151-0127-00			TRANSISTOR:SILICON,NPN	07263	S006075
A4Q4581	151-0220-00			TRANSISTOR:SILICON,PNP	07263	S036228
A4Q4582	151-0220-00			TRANSISTOR:SILICON,PNP	07263	S036228
A4Q4588	151-0354-00			TRANSISTOR:SILICON,PNP,DUAL	32293	ITS1200A
A4Q4598	151-0127-00			TRANSISTOR:SILICON,NPN	07263	S006075
A4R4001	315-0103-00			RES.,FXD,CMPSN:10K OHM,5%,0.25W	01121	CB1035
A4R4002	315-0472-00			RES.,FXD,CMPSN:4.7K OHM,5%,0.25W	01121	CB4725
A4R4003	315-0392-00			RES.,FXD,CMPSN:3.9K OHM,5%,0.25W	01121	CB3925
A4R4004	321-0327-00			RES.,FXD,FILM:24.9K OHM,1%,0.125W	91637	MFF1816G24901F

http://manoman.sqhill.com

Component No.	Tektronix Part No.	Serial/Model No. Eff	Dscont	Name & Description	Mfr Code	Mfr Part Number
A4R4005	321-0329-00			RES.,FXD,FILM:26.1K OHM,1%,0.125W	91637	MFF1816G26101F
A4R4006	315-0106-00			RES.,FXD,CMPSN:10M OHM,5%,0.25W	01121	CB1065
A4R4008	315-0182-00			RES.,FXD,CMPSN:1.8K OHM,5%,0.25W	01121	CB1825
A4R4013	315-0104-00			RES.,FXD,CMPSN:100K OHM,5%,0.25W	01121	CB1045
A4R4041	315-0101-00			RES.,FXD,CMPSN:100 OHM,5%,0.25W	01121	CB1015
A4R4042	315-0223-00			RES.,FXD,CMPSN:22K OHM,5%,0.25W	01121	CB2235
A4R4048	315-0183-00			RES.,FXD,CMPSN:18K OHM,5%,0.25W	01121	CB1835
A4R4059	311-1538-00			RES.,VAR,NONWIR:5K OHM X 2.5M OHM,10%	01121	18M683
A4R4069	311-1555-00			RES.,VAR,NONWIR:100K OHM,20%,0.5W	73138	91-77-0
A4R4072	311-1560-00			RES.,VAR,NONWIR:5K OHM,20%,0.50W	73138	91-82-0
A4R4075	315-0302-00			RES.,FXD,CMPSN:3K OHM,5%,0.25W	01121	CB3025
A4R4107	315-0471-00			RES.,FXD,CMPSN:470 OHM,5%,0.25W	01121	CB4715
A4R4108	315-0103-00			RES.,FXD,CMPSN:10K OHM,5%,0.25W	01121	CB1035
A4R4109	311-1557-00			RES.,VAR,NONWIR:25K OHM,20%,0.50W	73138	91-79-00
A4R4110	315-0471-00			RES.,FXD,CMPSN:470 OHM,5%,0.25W	01121	CB4715
A4R4111	315-0102-03			RES.,FXD,CMPSN:1K OHM,5%,0.25W	01121	CB1025
A4R4112	315-0394-00			RES.,FXD,CMPSN:390K OHM,5%,0.25W	01121	CB3945
A4R4113	315-0102-03			RES.,FXD,CMPSN:1K OHM,5%,0.25W	01121	CB1025
A4R4114	315-0911-00			RES.,FXD,CMPSN:910 OHM,5%,0.25W	01121	CB9115
A4R4119	315-0221-03			RES.,FXD,CMPSN:220 OHM,5%,0.25W	01121	CB2215
A4R4124	315-0226-00			RES.,FXD,CMPSN:22M OHM,5%,0.25W	01121	CB2265
A4R4123	315-0103-03			RES.,FXD,CMPSN:10K OHM,5%,0.25W	01121	CB1035
A4R4126	315-0103-03			RES.,FXD,CMPSN:10K OHM,5%,0.25W	01121	CB1035
A4R4127A,B,C,D	307-0290-04			RES.,FXD,FILM:MULTIPLE SECTION	80009	307-0290-04
A4R4128	315-0103-03			RES.,FXD,CMPSN:10K OHM,5%,0.25W	01121	CB1035
A4R4132	311-0075-00			RES.,VAR,NONWIR:5M OHM,20%	12697	381-CM16993
A4R4142	315-0470-00			RES.,FXD,CMPSN:47 OHM,5%,0.25W	01121	CB4705
A4R4144	315-0102-00			RES.,FXD,CMPSN:1K OHM,5%,0.25W	01121	CB1025
A4R4145	321-0189-00			RES.,FXD,FILM:909 OHM,1%,0.125W	91637	MFF1816G909R0F
A4R4146	301-0393-00			RES.,FXD,CMPSN:39K OHM,5%,0.50W	01121	EB3935
A4R4158	315-0475-00			RES.,FXD,CMPSN:4.7M OHM,5%,0.25W	01121	CB4755
A4R4161	315-0681-00			RES.,FXD,CMPSN:680 OHM,5%,0.25W	01121	CB6815
A4R4163	315-0182-00			RES.,FXD,CMPSN:1.8K OHM,5%,0.25W	01121	CB1825
A4R4165	315-0330-00			RES.,FXD,CMPSN:33 OHM,5%,0.25W	01121	CB3305
	----- -----			(NOMINAL VALUE,SELECTED)		
A4R4167	321-0247-00	B010100	B011249	RES.,FXD,FILM:3.65K OHM,1%,0.125W	91637	MFF1816G36500F
A4R4167	321-0245-00	B011250		RES.,FXD,FILM:3.48K OHM,1%,0.125W	91637	MFF1816G34800F
A4R4169	315-0221-00			RES.,FXD,CMPSN:220 OHM,5%,0.25W	01121	CB2215
A4R4172	321-0287-00			RES.,FXD,FILM:9.53K OHM,1%,0.125W	91637	MFF1816G95300F
A4R4173	321-0138-00			RES.,FXD,FILM:267 OHM,1%,0.125W	91637	MFF1816G267R0F
A4R4174	321-0138-00			RES.,FXD,FILM:267 OHM,1%,0.125W	91637	MFF1816G267R0F
A4R4175	315-0621-00			RES.,FXD,CMPSN:620 OHM,5%,0.25W	01121	CB6215
A4R4178	311-1372-00			RES.,VAR,NONWIR:100K OHM,20%,1W	01121	73M1G040L104M
A4R4179	311-1313-00			RES.,VAR,NONWIR:2K OHM,20%,1W	01121	73M4G048L202M
A4R4184	315-0822-00			RES.,FXD,CMPSN:8.2K OHM,5%,0.25W	01121	CB8225
A4R4185	315-0912-00			RES.,FXD,CMPSN:9.1K OHM,5%,0.25W	01121	CB9125
A4R4186	315-0473-00			RES.,FXD,CMPSN:47K OHM,5%,0.25W	01121	CB4735
A4R4191	315-0513-00			RES.,FXD,CMPSN:51K OHM,5%,0.25W	01121	CB5135
A4R4193	315-0302-00			RES.,FXD,CMPSN:3K OHM,5%,0.25W	01121	CB3025
A4R4195	311-1373-00			RES.,VAR,NONWIR:5K OHM,20%,1W	01121	73U4G040L502M
A4R4202	308-0459-00			RES.,FXD,WW:1.1 OHM,5%,3W	91637	CW2B-D1R100J
A4R4204	315-0242-00			RES.,FXD,CMPSN:2.4K OHM,5%,0.25W	01121	CB2425
A4R4205	321-0274-00			RES.,FXD,FILM:6.98K OHM,1%,0.125W	91637	MFF1816G69800F
A4R4206	321-0775-03			RES.,FXD,FILM:45K OHM,0.25%,0.125W	91637	MFF1816D45001C
A4R4207	321-0774-03			RES.,FXD,FILM:4.5K OHM,0.25%,0.125W	91637	MFF1816D45000C
A4R4208	315-0563-00			RES.,FXD,CMPSN:56K OHM,5%,0.25W	01121	CB5635

http://manoman.sqhill.com

Component No.	Tektronix Part No.	Serial/Model No. Eff	Dscont	Name & Description	Mfr Code	Mfr Part Number
A4R4216	315-0273-00			RES.,FXD,CMPSN:27K OHM,5%,0.25W	01121	CB2735
A4R4217	302-0393-00			RES.,FXD,CMPSN:39K OHM,10%,0.50W	01121	EB3931
A4R4218	323-0322-00			RES.,FXD,FILM:22.1K OHM,1%,0.50W	75042	CECT0-2212F
A4R4219	315-0102-00			RES.,FXD,CMPSN:1K OHM,5%,0.25W	01121	CB1025
A4R4220	315-0391-00			RES.,FXD,CMPSN:390 OHM,5%,0.25W	01121	CB3915
A4R4221	321-0249-00			RES.,FXD,FILM:3.83K OHM,1%,0.125W	91637	MFF1816G38300F
A4R4224	321-0168-00			RES.,FXD,FILM:549 OHM,1%,0.125W	91637	MFF1816G549R0F
A4R4225	315-0201-00			RES.,FXD,CMPSN:200 OHM,5%,0.25W	01121	CB2015
A4R4226	315-0475-00			RES.,FXD,CMPSN:4.7M OHM,5%,0.25W	01121	CB4755
A4R4227	315-0221-00			RES.,FXD,CMPSN:220 OHM,5%,0.25W	01121	CB2215
A4R4228	315-0103-00			RES.,FXD,CMPSN:10K OHM,5%,0.25W	01121	CB1035
A4R4230	315-0242-00			RES.,FXD,CMPSN:2.4K OHM,5%,0.25W	01121	CB2425
A4R4231	315-0102-00			RES.,FXD,CMPSN:1K OHM,5%,0.25W	01121	CB1025
A4R4235	315-0683-00			RES.,FXD,CMPSN:68K OHM,5%,0.25W	01121	CB6835
A4R4242	315-0101-00			RES.,FXD,CMPSN:100 OHM,5%,0.25W	01121	CB1015
A4R4244	322-0289-00			RES.,FXD,FILM:10K OHM,1%,0.25W	75042	CEBT0-1002F
A4R4245	315-0101-00			RES.,FXD,CMPSN:100 OHM,5%,0.25W	01121	CB1015
A4R4250	322-0289-00			RES.,FXD,FILM:10K OHM,1%,0.25W	75042	CEBT0-1002F
A4R4253	311-1556-00	XB011250		RES.,VAR,NONWIR:50K OHM,20%,0.50W	73138	91-78-0
A4R4254	322-0289-00			RES.,FXD,FILM:10K OHM,1%,0.25W	75042	CEBT0-1002F
A4R4260	315-0622-00	B010100	B011249	RES.,FXD,CMPSN:6.2K OHM,5%,0.25W	01121	CB6225
	----- -----			(NOMINAL VALUE,SELECTED)		
A4R4260	315-0223-00	B011250		RES.,FXD,CMPSN:22K OHM,5%,0.25W	01121	CB2235
A4R4262	315-0562-00	B010100	B011249	RES.,FXD,CMPSN:5.6K OHM,5%,0.25W	01121	CB5625
	----- -----			(NOMINAL VALUE,SELECTED)		
A4R4262	315-0223-00	B011250		RES.,FXD,CMPSN:22K OHM,5%,0.25W	01121	CB2235
A4R4263	301-0181-00			RES.,FXD,CMPSN:180 OHM,5%,0.50W	01121	EB1815
A4R4265	321-0142-00			RES.,FXD,FILM:294 OHM,1%,0.125W	91637	MFF1816G294R0F
A4R4266	321-0126-00			RES.,FXD,FILM:200 OHM,1%,0.125W	91637	MFF1816G200R0F
A4R4267	321-0126-00			RES.,FXD,FILM:200 OHM,1%,0.125W	91637	MFF1816G200R0F
A4R4268	321-0300-00			RES.,FXD,FILM:13K OHM,1%,0.125W	91637	MFF1816G13001F
	----- -----			(NOMINAL VALUE,SELECTED)		
A4R4270	321-0206-00			RES.,FXD,FILM:1.37K OHM,1%,0.125W	91637	MFF1816G13700F
A4R4272	315-0621-00			RES.,FXD,CMPSN:620 OHM,5%,0.25W	01121	CB6215
A4R4273	323-0289-00			RES.,FXD,FILM:10K OHM,1%,0.50W	75042	CECT0-1002F
A4R4274	311-1563-00			RES.,VAR,NONWIR:1K OHM,20%,0.50W	73138	91-85-0
A4R4275	311-1561-00			RES.,VAR,NONWIR:2.5K OHM,20%,0.50W	73138	91-83-0
A4R4276	321-0210-00			RES.,FXD,FILM:1.5K OHM,1%,0.125W	91637	MFF1816G15000F
A4R4277	323-0289-00			RES.,FXD,FILM:10K OHM,1%,0.50W	75042	CECT0-1002F
A4R4279	321-0110-00			RES.,FXD,FILM:137 OHM,1%,0.125W	91637	MFF1816G137R0F
A4R4280	321-0205-00			RES.,FXD,FILM:1.33K OHM,1%,0.125W	91637	MFF1816G13300F
A4R4281	321-0164-00			RES.,FXD,FILM:499 OHM,1%,0.125W	91637	MFF1816G499R0F
A4R4282	321-0248-00	B010100	B022259	RES.,FXD,FILM:3.74K OHM,1%,0.125W	91637	MFF1816G37400F
A4R4282	321-0253-00	B022260		RES.,FXD,FILM:4.22K OHM,1%,0.125W	91637	MFF1816G42200F
A4R4283	315-0472-00			RES.,FXD,CMPSN:4.7K OHM,5%,0.25W	01121	CB4725
A4R4284	315-0333-00			RES.,FXD,CMPSN:33K OHM,5%,0.25W	01121	CB3335
A4R4285	321-0174-00			RES.,FXD,FILM:634 OHM,1%,0.125W	91637	MFF1816G634R0F
A4R4286	315-0471-00			RES.,FXD,CMPSN:470 OHM,5%,0.25W	01121	CB4715
A4R4287	315-0152-00			RES.,FXD,CMPSN:1.5K OHM,5%,0.25W	01121	CB1525
A4R4288	315-0202-00			RES.,FXD,CMPSN:2K OHM,5%,0.25W	01121	CB2025
A4R4289	315-0203-00			RES.,FXD,CMPSN:20K OHM,5%,0.25W	01121	CB2035
A4R4291	315-0512-00			RES.,FXD,CMPSN:5.1K OHM,5%,0.25W	01121	CB5125
A4R4293	311-1568-00			RES.,VAR,NONWIR:50 OHM,20%,0.50W	73138	91-90-0
A4R4294	321-0107-00			RES.,FXD,FILM:127 OHM,1%,0.125W	91637	MFF1816G127R0F
A4R4295	321-0001-00			RES.,FXD,FILM:10 OHM,1%,0.125W	75042	CEAT0-10R00F
A4R4302	315-0122-00			RES.,FXD,CMPSN:1.2K OHM,5%,0.25W	01121	CB1225

http://manoman.sqhill.com

Component No.	Tektronix Part No.	Serial/Model No. Eff	Dscont	Name & Description	Mfr Code	Mfr Part Number
A4R4305	321-0366-00			RES.,FXD,FILM:63.4K OHM,1%,0.125W	91637	MFF1816G63401F
A4R4306	315-0102-00			RES.,FXD,CMPSN:1K OHM,5%,0.25W	01121	CB1025
A4R4311	321-0962-03			RES.,FXD,FILM:8K OHM,0.25%,0.125W	91637	MFF1816D80000C
A4R4312	321-0967-03			RES.,FXD,FILM:55K OHM,0.25%,0.125W	91637	MFF1816D55001C
A4R4313	315-0101-00			RES.,FXD,CMPSN:100 OHM,5%,0.25W	01121	CB1015
A4R4314	321-0201-00			RES.,FXD,FILM:1.21K OHM,1%,0.125W	91637	MFF1816G12100F
A4R4315	315-0512-00			RES.,FXD,CMPSN:5.1K OHM,5%,0.25W	01121	CB5125
A4R4316	315-0183-00			RES.,FXD,CMPSN:18K OHM,5%,0.25W	01121	CB1835
A4R4318	311-1226-00			RES.,VAR,NONWIR:2.5K OHM,20%,0.50W	32997	3386F-T04-252
A4R4319	321-0292-00			RES.,FXD,FILM:10.7K OHM,1%,0.125W	91637	MFF1816G10701F
A4R4321	321-0307-00			RES.,FXD,FILM:15.4K OHM,1%,0.125W	91637	MFF1816G15401F
A4R4322	321-0220-00			RES.,FXD,FILM:1.91K OHM,1%,0.125W	91637	MFF1816G19100F
A4R4323	301-0243-00			RES.,FXD,CMPSN:24K OHM,5%,0.50W	01121	EB2435
A4R4324	315-0242-00			RES.,FXD,CMPSN:2.4K OHM,5%,0.25W	01121	CB2425
A4R4325	307-0093-00			RES.,FXD,CMPSN:1.2 OHM,5%,0.50W	01121	EB12G5
A4R4326	303-0223-00			RES.,FXD,CMPSN:22K OHM,5%,1W	01121	GB2235
A4R4327	315-0153-00			RES.,FXD,CMPSN:15K OHM,5%,0.25W	01121	CB1535
A4R4331	315-0273-00			RES.,FXD,CMPSN:27K OHM,5%,0.25W	01121	CB2735
A4R4332	315-0224-00			RES.,FXD,CMPSN:220K OHM,5%,0.25W	01121	CB2245
A4R4341	322-0289-00			RES.,FXD,FILM:10K OHM,1%,0.25W	75042	CEBT0-1002F
A4R4342	301-0393-00			RES.,FXD,CMPSN:39K OHM,5%,0.50W	01121	EB3935
A4R4343	315-0470-00			RES.,FXD,CMPSN:47 OHM,5%,0.25W	01121	CB4705
A4R4344	302-0273-00			RES.,FXD,CMPSN:27K OHM,10%,0.50W	01121	EB2731
A4R4345	321-0268-00			RES.,FXD,FILM:6.04K OHM,1%,0.125W	91637	MFF1816G60400F
A4R4346	321-0189-00			RES.,FXD,FILM:909 OHM,1%,0.125W	91637	MFF1816G909R0F
A4R4347	321-0034-00			RES.,FXD,FILM:22.1 OHM,1%,0.125W	91637	MFF1816G22R10F
A4R4351	315-0273-00			RES.,FXD,CMPSN:27K OHM,5%,0.25W	01121	CB2735
A4R4352	321-0222-00			RES.,FXD,FILM:2K OHM,1%,0.125W	91637	MFF1816G20000F
A4R4360	321-0142-00			RES.,FXD,FILM:294 OHM,1%,0.125W	91637	MFF1816G294R0F
A4R4361	321-0247-00	B010100	B011249	RES.,FXD,FILM:3.65K OHM,1%,0.125W	91637	MFF1816G36500F
A4R4361	321-0245-00	B011250		RES.,FXD,FILM:3.48K OHM,1%,0.125W	91637	MFF1816G34800F
A4R4362	315-0391-00			RES.,FXD,CMPSN:390 OHM,5%,0.25W	01121	CB3915
A4R4363	315-0121-00			RES.,FXD,CMPSN:120 OHM,5%,0.25W	01121	CB1215
	----- -----			(NOMINAL VALUE,SELECTED)		
A4R4364	315-0102-00			RES.,FXD,CMPSN:1K OHM,5%,0.25W	01121	CB1025
A4R4365	321-0222-00			RES.,FXD,FILM:2K OHM,1%,0.125W	91637	MFF1816G20000F
A4R4366	321-0173-00			RES.,FXD,FILM:619 OHM,1%,0.125W	91637	MFF1816G619R0F
A4R4367	321-0184-00			RES.,FXD,FILM:806 OHM,1%,0.125W	91637	MFF1816G806R0F
A4R4368	323-0248-00			RES.,FXD,FILM:3.74K OHM,1%,0.50W	75042	CECT0-3741F
A4R4369	323-0248-00			RES.,FXD,FILM:3.74K OHM,1%,0.50W	75042	CECT0-3741F
A4R4371	321-0184-00			RES.,FXD,FILM:806 OHM,1%,0.125W	91637	MFF1816G806R0F
A4R4372	321-0173-00			RES.,FXD,FILM:619 OHM,1%,0.125W	91637	MFF1816G619R0F
A4R4373	311-1567-00			RES.,VAR,NONWIR:TRMR,100 OHM,0.50W	73138	91-89-0
A4R4374	315-0270-00			RES.,FXD,CMPSN:27 OHM,5%,0.25W	01121	CB2705
A4R4375	315-0331-00			RES.,FXD,CMPSN:330 OHM,5%,0.25W	01121	CB3315
A4R4376	323-0191-00			RES.,FXD,FILM:953 OHM,1%,0.50W	75042	CECT0-9530F
A4R4381	311-1567-00			RES.,VAR,NONWIR:TRMR,100 OHM,0.50W	73138	91-89-0
A4R4382	321-0193-00			RES.,FXD,FILM:1K OHM,1%,0.125W	91637	MFF1816G10000F
A4R4383	321-0147-00			RES.,FXD,FILM:332 OHM,1%,0.125W	91637	MFF1816G332R0F
A4R4384	321-0116-00			RES.,FXD,FILM:158 OHM,1%,0.125W	91637	MFF1816G158R0F
A4R4392	315-0512-00			RES.,FXD,CMPSN:5.1K OHM,5%,0.25W	01121	CB5125
A4R4393	315-0472-00	B010100	B029999X	RES.,FXD,CMPSN:4.7K OHM,5%,0.25W	01121	CB4725
A4R4394	315-0122-00			RES.,FXD,CMPSN:1.2K OHM,5%,0.25W	01121	CB1225
A4R4395	315-0821-00			RES.,FXD,CMPSN:820 OHM,5%,0.25W	01121	CB8215
A4R4396	315-0122-00			RES.,FXD,CMPSN:1.2K OHM,5%,0.25W	01121	CB1225
A4R4397	315-0102-00			RES.,FXD,CMPSN:1K OHM,5%,0.25W	01121	CB1025
A4R4403	308-0459-00			RES.,FXD,WW:1.1 OHM,5%,3W	91637	CW2B-D1R100J

http://manoman.sqhill.com

Component No.	Tektronix Part No.	Serial/Model No. Eff	Dscont	Name & Description	Mfr Code	Mfr Part Number
A4R4404	315-0102-00			RES.,FXD,CMPSN:1K OHM,5%,0.25W	01121	CB1025
A4R4405	315-0153-00			RES.,FXD,CMPSN:15K OHM,5%,0.25W	01121	CB1535
A4R4406	321-0296-00			RES.,FXD,FILM:11.8K OHM,1%,0.125W	91637	MFF1816G11801F
A4R4407	321-0603-00			RES.,FXD,FILM:15K OHM,0.25%,0.125W	91637	MFF1816D15001C
A4R4411	321-0966-03			RES.,FXD,FILM:40K OHM,0.25%,0.125W	91637	MFF1816D40001C
A4R4412	303-0472-00			RES.,FXD,CMPSN:4.7K OHM,5%,1W	01121	GB4725
A4R4421	323-0269-00			RES.,FXD,FILM:6.19K OHM,1%,0.50W	75042	CECT0-6191F
A4R4422	308-0644-00			RES.,FXD,WW:25 OHM,1%,5W	91637	RS5111-25R00F
A4R4432	315-0200-02			RES.,FXD,CMPSN:20 OHM,5%,0.25W	01121	CB2005
A4R4433	315-0101-00			RES.,FXD,CMPSN:100 OHM,5%,0.25W	01121	CB1015
A4R4434	303-0203-00			RES.,FXD,CMPSN:20K OHM,5%,1W	01121	GB2035
A4R4441	315-0302-00			RES.,FXD,CMPSN:3K OHM,5%,0.25W	01121	CB3025
A4R4451	315-0101-00			RES.,FXD,CMPSN:100 OHM,5%,0.25W	01121	CB1015
A4R4461	321-0229-00			RES.,FXD,FILM:2.37K OHM,1%,0.125W	91637	MFF1816G23700F
A4R4462	321-0251-01			RES.,FXD,FILM:4.02K OHM,0.5%,0.125W	91637	MFF1816G40200D
A4R4466	321-0418-00			RES.,FXD,FILM:221K OHM,1%,0.125W	91637	MFF1816G22102F
A4R4467	315-0822-00			RES.,FXD,CMPSN:8.2K OHM,5%,0.25W	01121	CB8225
A4R4469	315-0101-00			RES.,FXD,CMPSN:100 OHM,5%,0.25W	01121	CB1015
A4R4471	321-0463-00			RES.,FXD,FILM:649K OHM,1%,0.125W	91637	MFF1816G64902F
A4R4472	315-0822-00			RES.,FXD,CMPSN:8.2K OHM,5%,0.25W	01121	CB8225
A4R4473	315-0221-00			RES.,FXD,CMPSN:220 OHM,5%,0.25W	01121	CB2215
A4R4474	321-0228-00			RES.,FXD,FILM:2.32K OHM,1%,0.125W	91637	MFF1816G23200F
A4R4475	321-0251-01			RES.,FXD,FILM:4.02K OHM,0.5%,0.125W	91637	MFF1816G40200D
A4R4476	315-0184-00			RES.,FXD,CMPSN:180K OHM,5%,0.25W	01121	CB1845
A4R4477	315-0470-00			RES.,FXD,CMPSN:47 OHM,5%,0.25W	01121	CB4705
A4R4479	315-0470-00			RES.,FXD,CMPSN:47 OHM,5%,0.25W	01121	CB4705
A4R4482	315-0512-02			RES.,FXD,CMPSN:5.1K OHM,5%,0.25W	01121	CB5125
A4R4483	315-0512-02			RES.,FXD,CMPSN:5.1K OHM,5%,0.25W	01121	CB5125
A4R4484	315-0512-02			RES.,FXD,CMPSN:5.1K OHM,5%,0.25W	01121	CB5125
A4R4485	315-0222-00			RES.,FXD,CMPSN:2.2K OHM,5%,0.25W	01121	CB2225
A4R4486	315-0512-00			RES.,FXD,CMPSN:5.1K OHM,5%,0.25W	01121	CB5125
A4R4487	315-0222-00			RES.,FXD,CMPSN:2.2K OHM,5%,0.25W	01121	CB2225
A4R4488	315-0512-00			RES.,FXD,CMPSN:5.1K OHM,5%,0.25W	01121	CB5125
A4R4491	315-0122-00			RES.,FXD,CMPSN:1.2K OHM,5%,0.25W	01121	CB1225
A4R4492	315-0821-00			RES.,FXD,CMPSN:820 OHM,5%,0.25W	01121	CB8215
A4R4493	315-0122-00			RES.,FXD,CMPSN:1.2K OHM,5%,0.25W	01121	CB1225
A4R4494	315-0821-00			RES.,FXD,CMPSN:820 OHM,5%,0.25W	01121	CB8215
A4R4495	315-0102-00			RES.,FXD,CMPSN:1K OHM,5%,0.25W	01121	CB1025
A4R9996	315-0102-00			RES.,FXD,CMPSN:1K OHM,5%,0.25W	01121	CB1025
A4R4497	315-0101-00			RES.,FXD,CMPSN:100 OHM,5%,0.25W	01121	CB1015
A4R4498	315-0470-00			RES.,FXD,CMPSN:47 OHM,5%,0.25W	01121	CB4705
A4R4526	308-0363-00			RES.,FXD,WW:3K OHM,5%,8W	91637	RS8-B30000J
A4R4527	315-0103-00			RES.,FXD,CMPSN:10K OHM,5%,0.25W	01121	CB1035
A4R4531	315-0103-00			RES.,FXD,CMPSN:10K OHM,5%,0.25W	01121	CB1035
A4R4545	301-0432-00			RES.,FXD,CMPSN:4.3K OHM,5%,0.50W	01121	EB4325
A4R4546	321-0228-00			RES.,FXD,FILM:2.32K OHM,1%,0.125W	91637	MFF1816G23200F
A4R4547	315-0103-00			RES.,FXD,CMPSN:10K OHM,5%,0.25W	01121	CB1035
A4R4548	321-0193-00			RES.,FXD,FILM:1K OHM,1%,0.125W	91637	MFF1816G10000F
A4R4551	308-0421-00			RES.,FXD,WW:3K OHM,5%,3W	91637	CW-2B B30000J
A4R4552	315-0360-00			RES.,FXD,CMPSN:36 OHM,5%,0.25W	01121	CB3605
A4R4553	321-0250-00			RES.,FXD,FILM:3.92K OHM,1%,0.125W	91637	MFF1816G39200F
A4R4554	321-0195-00			RES.,FXD,FILM:1.05K OHM,1%,0.125W	91637	MFF1816G10500F
A4R4561	315-0360-00			RES.,FXD,CMPSN:36 OHM,5%,0.25W	01121	CB3605
A4R4562	321-0193-00			RES.,FXD,FILM:1K OHM,1%,0.125W	91637	MFF1816G10000F
A4R4563	321-0165-00			RES.,FXD,FILM:511 OHM,1%,0.125W	91637	MFF1816G511R0F
A4R4564	315-0330-00			RES.,FXD,CMPSN:33 OHM,5%,0.25W	01121	CB3305
A4R4565	315-0101-00			RES.,FXD,CMPSN:100 OHM,5%,0.25W	01121	CB1015

http://manoman.sqhill.com

Component No.	Tektronix Part No.	Serial/Model No. Eff	Dscont	Name & Description	Mfr Code	Mfr Part Number
A4R4566	321-0193-00			RES.,FXD,FILM:1K OHM,1%,0.125W	91637	MFF1816G10000F
A4R4568	315-0330-00			RES.,FXD,CMPSN:33 OHM,5%,0.25W	01121	CB3305
A4R4570	311-1567-00			RES.,VAR,NONWIR:TRMR,100 OHM,0.50W	73138	91-89-0
A4R4571	315-0101-00			RES.,FXD,CMPSN:100 OHM,5%,0.25W	01121	CB1015
A4R4572	321-0256-00			RES.,FXD,FILM:4.53K OHM,1%,0.125W	91637	MFF1816G45300F
A4R4573	321-0154-00			RES.,FXD,FILM:392 OHM,1%,0.125W	91637	MFF1816G392R0F
A4R4574	321-0231-00			RES.,FXD,FILM:2.49K OHM,1%,0.125W	91637	MFF1816G24900F
A4R4575	315-0101-00			RES.,FXD,CMPSN:100 OHM,5%,0.25W	01121	CB1015
A4R4576	303-0432-00			RES.,FXD,CMPSN:4.3K OHM,5%,1W	01121	GB4325
A4R4577	315-0103-00			RES.,FXD,CMPSN:10K OHM,5%,0.25W	01121	CB1035
A4R4578	321-0228-00			RES.,FXD,FILM:2.32K OHM,1%,0.125W	91637	MFF1816G23200F
A4R4579	321-0193-00			RES.,FXD,FILM:1K OHM,1%,0.125W	91637	MFF1816G10000F
A4R4581	308-0421-00			RES.,FXD,WW:3K OHM,5%,3W	91637	CW-2B B3000OJ
A4R4583	315-0360-00			RES.,FXD,CMPSN:36 OHM,5%,0.25W	01121	CB3605
A4R4584	321-0250-00			RES.,FXD,FILM:3.92K OHM,1%,0.125W	91637	MFF1816G39200F
A4R4585	321-0195-00			RES.,FXD,FILM:1.05K OHM,1%,0.125W	91637	MFF1816G10500F
A4R4586	321-0193-00			RES.,FXD,FILM:1K OHM,1%,0.125W	91637	MFF1816G10000F
A4R4587	321-0165-00			RES.,FXD,FILM:511 OHM,1%,0.125W	91637	MFF1816G511R0F
A4R4592	315-0360-00			RES.,FXD,CMPSN:36 OHM,5%,0.25W	01121	CB3605
A4R4593	315-0273-00			RES.,FXD,CMPSN:27K OHM,5%,0.25W	01121	CB2735
A4R4595	321-0256-00			RES.,FXD,FILM:4.53K OHM,1%,0.125W	91637	MFF1816G45300F
A4R4596	315-0101-00			RES.,FXD,CMPSN:100 OHM,5%,0.25W	01121	CB1015
A4R4597	321-0193-00			RES.,FXD,FILM:1K OHM,1%,0.125W	91637	MFF1816G10000F
A4R4598	315-0181-00			RES.,FXD,CMPSN:180 OHM,5%,0.25W	01121	CB1815
A4R4599	315-0101-00			RES.,FXD,CMPSN:100 OHM,5%,0.25W	01121	CB1015
A4RT4373	307-0122-00			RES.,THERMAL:50 OHM,10%	50157	3D1515
A4S4075	260-1310-01			SWITCH,PUSH:4PDT MOMENTARY,NON-SHORTING	80009	260-1310-01
A4S4371	260-1208-00			SWITCH,PUSH:DPDT,28VDC,PUSH-PUSH	80009	260-1208-00
A4T4015	120-0800-01			XFMR,PWR,SDN&SU:MOLDED	80009	120-0800-01
A4U4032	152-0552-00			SEMICOND DEVICE:V MULTR,5KV IN,15KV OUT	52306	CMX234
A4U4206	156-0158-00			MICROCIRCUIT,LI:DUAL OPERATIONAL AMPLIFIER	18324	MC1458V
A4U4269	156-0197-00	B010100	B039319	MICROCIRCUIT,LI:5 TRANSISTOR ARRAY	80009	156-0197-00
A4U4269	156-0048-03	B039320		MICROCIRCUIT,LI:5 TRANSISTOR ARRAY	80009	156-0048-03
A4U4391	156-0383-00			MICROCIRCUIT,DI:QUAD 2-INPUT NOR GATE	80009	156-0383-00
A4U4411	156-0158-00			MICROCIRCUIT,LI:DUAL OPERATIONAL AMPLIFIER	18324	MC1458V
A4U4491	156-0388-00			MICROCIRCUIT,DI:DUAL D-TYPE FLIP-FLOP	80009	156-0388-00
A4VR4007	152-0289-00			SEMICOND DEVICE:ZENER,0.4W,180V,5%	04713	SZ12484KRL
A4VR4108	152-0286-00			SEMICOND DEVICE:ZENER,0.4W,75V,5%	80009	152-0286-00
A4VR4194	152-0127-00			SEMICOND DEVICE:ZENER,0.4W,7.5V,5%	04713	SZG35009K2
A4VR4215	152-0166-00			SEMICOND DEVICE:ZENER,0.4W,6.2V,5%	04713	SZ11738
A4VR4304	152-0283-00			SEMICOND DEVICE:ZENER,0.4W,43V,5%	12954	DZ750903B1N976B
A4VR4326	152-0304-00			SEMICOND DEVICE:ZENER,0.4W,20V,5%	14433	1N968B
A4VR4341	152-0166-00			SEMICOND DEVICE:ZENER,0.4W,6.2V,5%	04713	SZ11738
A4VR4394	152-0306-00			SEMICOND DEVICE:ZENER,0.4W,9.1V,5%	14433	1N960B
A4VR4408	152-0281-00			SEMICOND DEVICE:ZENER,0.4W,22V,5%	80009	152-0281-00
A4VR4421	152-0411-00			SEMICOND DEVICE:ZENER,0.25W,9V,5%	04713	SZ12483K
A4VR4422	152-0268-00			SEMICOND DEVICE:ZENER,0.4W,56V,5%	80009	152-0268-00
A4VR4495	152-0306-00			SEMICOND DEVICE:ZENER,0.4W,9.1V,5%	14433	1N960B
A4VR4496	152-0306-00			SEMICOND DEVICE:ZENER,0.4W,9.1V,5%	14433	1N960B
A4VR4497	152-0278-00			SEMICOND DEVICE:ZENER,0.4W,3V,5%	04713	SZG35009K20
A4W4032	131-0566-00			BUS CONDUCTOR:DUMMY RES,2.375,22 AWG	55210	L-2007-1
A4W4183	131-0566-00			BUS CONDUCTOR:DUMMY RES,2.375,22 AWG	55210	L-2007-1
A4W4259	131-0566-00			BUS CONDUCTOR:DUMMY RES,2.375,22 AWG	55210	L-2007-1
A4W4348	131-0566-00			BUS CONDUCTOR:DUMMY RES,2.375,22 AWG	55210	L-2007-1
A4W4440	131-0566-00			BUS CONDUCTOR:DUMMY RES,2.375,22 AWG	55210	L-2007-1
A4W4468	131-0566-00			BUS CONDUCTOR:DUMMY RES,2.375,22 AWG	55210	L-2007-1
A4W4481	131-0566-00			BUS CONDUCTOR:DUMMY RES,2.375,22 AWG	55210	L-2007-1
A4W4483	131-0566-00			BUS CONDUCTOR:DUMMY RES,2.375,22 AWG	55210	L-2007-1
A4W4544	131-0566-00			BUS CONDUCTOR:DUMMY RES,2.375,22 AWG	55210	L-2007-1

http://manoman.sqhill.com

Component No.	Tektronix Part No.	Serial/Model No. Eff	Dscont	Name & Description	Mfr Code	Mfr Part Number
A5	----- -----			CKT BOARD ASSY:VERTICAL MODE SW		
A5C5018	281-0773-00			CAP.,FXD,CER DI:0.01UF,10%,100V	72982	8005H9AADW5R103K
A5C5135	290-0246-00			CAP.,FXD,ELCTLT:3.3UF,10%,15V	56289	162D335X9015CD2
A5C5145	290-0246-00			CAP.,FXD,ELCTLT:3.3UF,10%,15V	56289	162D335X9015CD2
A5C5214	290-0804-00			CAP.,FXD,ELCTLT:10UF,+50-10%,25V	55680	25ULA10V-T
A5C5235	290-0246-00			CAP.,FXD,ELCTLT:3.3UF,10%,15V	56289	162D335X9015CD2
A5C5245	290-0246-00			CAP.,FXD,ELCTLT:3.3UF,10%,15V	56289	162D335X9015CD2
A5CR5115	152-0141-02			SEMICOND DEVICE:SILICON,30V,150MA	01295	1N4152R
A5CR5116	152-0141-02			SEMICOND DEVICE:SILICON,30V,150MA	01295	1N4152R
A5CR5118	152-0141-02			SEMICOND DEVICE:SILICON,30V,150MA	01295	1N4152R
A5CR5211	152-0141-02			SEMICOND DEVICE:SILICON,30V,150MA	01295	1N4152R
A5CR5214	152-0141-02			SEMICOND DEVICE:SILICON,30V,150MA	01295	1N4152R
A5Q5017	151-0301-00			TRANSISTOR:SILICON,PNP	04713	2N2907A
A5Q5056	151-0302-00			TRANSISTOR:SILICON,NPN	07263	S038487
A5Q5057	151-0281-00			TRANSISTOR:SILICON,NPN	03508	X16P4039
A5Q5241	151-0301-00			TRANSISTOR:SILICON,PNP	04713	2N2907A
A5Q5257	151-0281-00			TRANSISTOR:SILICON,NPN	03508	X16P4039
A5Q5258	151-0302-00			TRANSISTOR:SILICON,NPN	07263	S038487
A5R5005	315-0102-00			RES.,FXD,CMPSN:1K OHM,5%,0.25W	01121	CB1025
A5R5006	315-0102-00			RES.,FXD,CMPSN:1K OHM,5%,0.25W	01121	CB1025
A5R5007	315-0102-00			RES.,FXD,CMPSN:1K OHM,5%,0.25W	01121	CB1025
A5R5015	315-0103-00			RES.,FXD,CMPSN:10K OHM,5%,0.25W	01121	CB1035
A5R5018	315-0331-00			RES.,FXD,CMPSN:330 OHM,5%,D.25W	01121	CB3315
A5R5041	315-0161-00			RES.,FXD,CMPSN:160 OHM,5%,0.25W	01121	CB1615
A5R5042	315-0332-00			RES.,FXD,CMPSN:3.3K OHM,5%,0.25W	01121	CB3325
A5R5051	315-0241-00			RES.,FXD,CMPSN:240 OHM,5%,0.25W	01121	CB2415
A5R5052	315-0162-00			RES.,FXD,CMPSN:1.6K OHM,5%,0.25W	01121	CB1625
A5R5053	315-0821-00			RES.,FXD,CMPSN:820 OHM,5%,0.25W	01121	CB8215
A5R5055	315-0473-00			RES.,FXD,CMPSN:47K OHM,5%,0.25W	01121	CB4735
A5R5111	315-0102-00			RES.,FXD,CMPSN:1K OHM,5%,0.25W	01121	CB1025
A5R5114	315-0472-00			RES.,FXD,CMPSN:4.7K OHM,5%,0.25W	01121	CB4725
A5R5117	315-0331-00			RES.,FXD,CMPSN:330 OHM,5%,0.25W	01121	CB3315
A5R5135	315-0621-00			RES.,FXD,CMPSN:620 OHM,5%,0.25W	01121	CB6215
A5R5145	315-0621-00			RES.,FXD,CMPSN:620 OHM,5%,0.25W	01121	CB6215
A5R5211	315-0302-00			RES.,FXD,CMPSN:3K OHM,5%,0.25W	01121	CB3025
A5R5212	315-0472-00			RES.,FXD,CMPSN:4.7K OHM,5%,0.25W	01121	CB4725
A5R5213	315-0362-00			RES.,FXD,CMPSN:3.6K OHM,5%,0.25W	01121	CB3625
A5R5214	315-0751-00			RES.,FXD,CMPSN:750 OHM,5%,0.25W	01121	CB7515
A5R5235	315-0621-00			RES.,FXD,CMPSN:620 OHM,5%,0.25W	01121	CB6215
A5R5236	315-0103-00			RES.,FXD,CMPSN:10K OHM,5%,0.25W	01121	CB1035
A5R5237	315-0472-00			RES.,FXD,CMPSN:4.7K OHM,5%,0.25W	01121	CB4725
A5R5238	315-0821-00			RES.,FXD,CMPSN:820 OHM,5%,0.25W	01121	CB8215
A5R5245	315-0621-00			RES.,FXD,CMPSN:620 OHM,5%,0.25W	01121	CB6215
A5R5251	315-0241-00			RES.,FXD,CMPSN:240 OHM,5%,0.25W	01121	CB2415
A5R5252	315-0162-00			RES.,FXD,CMPSN:1.6K OHM,5%,0.25W	01121	CB1625
A5R5253	315-0161-00			RES.,FXD,CMPSN:160 OHM,5%,0.25W	01121	CB1615
A5R5254	315-0332-00			RES.,FXD,CMPSN:3.3K OHM,5%,0.25W	01121	CB3325
A5R5255	315-0473-00			RES.,FXD,CMPSN:47K OHM,5%,0.25W	01121	CB4735
A5S5210	260-1944-00			SWITCH,PUSH:5 BTN,2 POLE,VERTICAL MODE	80009	260-1944-00
A5U5235	156-0652-00			MICROCIRCUIT,DI:QUAD 2-INPUT EXCL NOR GATE	01295	SN74LS266N

http://manoman.sqhill.com

Component No.	Tektronix Part No.	Serial/Model No. Eff	Dscont	Name & Description	Mfr Code	Mfr Part Number
A6	----- -----			CKT BOARD ASSY:TIMING		
A6C6001	281-0763-00			CAP.,FXD,CER DI:47PF,10%,100V	72982	8035D9AADC1G470K
A6C6002	281-0096-00			CAP.,VAR,AIR DI:5.5-18PF,350V	72982	538-006-A5.5-18
A6C6015	281-0089-00			CAP.,VAR,CER DI:2-8PF,350V	72982	538-006-A2-8
A6C6016	283-0331-00			CAP.,FXD,CER DI:43PF,2%,100V	72982	805-505A430G
A6C6020	----- -----			(MATCHED SET WITH A6C6105)		
A6C6033	281-0773-00			CAP.,FXD,CER DI:0.01UF,10%,100V	72982	8005H9AADW5R103K
A6C6041	281-0089-00			CAP.,VAR,CER DI:2-8PF,350V	72982	538-006-A2-8
A6C6043	283-0331-00			CAP.,FXD,CER DI:43PF,2%,100V	72982	805-505A430G
A6C6105	295-0175-00			CAP.,SET,MTCHD:0.1UF,9.95UF,985UF,0.2%	80009	295-0175-00
A6C6110	----- -----			(MATCHED SET WITH A6C6105)		
A6C6112	283-0645-00			CAP.,FXD,MICA D:790PF,1%,100V	00853	D151E791F0
A6C6121	290-0245-00			CAP.,FXD,ELCTLT:1.5UF,10%,10V	56289	150D155X9010A2
A6C6122	281-0707-00	B010100	B011099	CAP.,FXD,CER DI:15000PF,20%,100V	72982	8003W5R 153K
A6C6122	283-0239-00	B011100		CAP.,FXD,CER DI:0.022UF,10%,50V	72982	8121N083X7R0223K
A6C6135 A6C6140 A6C6225	295-0157-00			CAP.,SET,MTCHD:0.1UF,1UF,998PF	80009	295-0157-00
A6CR6113	152-0141-02			SEMICOND DEVICE:SILICON,30V,150MA	01295	1N4152R
A6CR6218	152-0141-02			SEMICOND DEVICE:SILICON,30V,150MA	01295	1N4152R
A6CR6219	152-0141-02			SEMICOND DEVICE:SILICON,30V,150MA	01295	1N4152R
A6Q6032	151-0190-00			TRANSISTOR:SILICON,NPN	07263	S032677
A6Q6034	151-0302-00			TRANSISTOR:SILICON,NPN	07263	S038487
A6Q6036	151-0302-00			TRANSISTOR:SILICON,NPN	07263	S038487
A6Q6215	151-0188-00			TRANSISTOR:SILICON,PNP	04713	SPS6868K
A6R6001	315-0101-00			RES.,FXD,CMPSN:100 OHM,5%,0.25W	01121	CB1015
A6R6002	323-0498-04			RES.,FXD,FILM:1.5M OHM,0.1%,0.50W	91637	HFF129D15003B
A6R6004	323-0481-04			RES.,FXD,FILM:1M OHM,0.1%,0.50W	91637	MFF1226D10003B
A6R6006	321-0648-04			RES.,FXD,FILM:500K OHM,0.1%,0.125W	91637	CMF110216D5002B
A6R6008	321-0618-04			RES.,FXD,FILM:250K OHM,0.1%,0.125W	07716	OBD
A6R6010	321-0414-04			RES.,FXD,FILM:200K OHM,0.1%,0.125W	91637	MFF1816D20002B
A6R6011	311-1915-00			RES.,VAR,NONWIR:20K OHM,10%,0.50W	73138	72-196-0
A6R6012	321-0265-00			RES.,FXD,FILM:5.62K OHM,1%,0.125W	91637	MFF1816G56200F
A6R6013	321-0385-04			RES.,FXD,FILM:100K OHM,0.1%,0.125W	91637	MFF1816D10002B
A6R6014	321-0756-04			RES.,FXD,FILM:50K OHM,0.1%,0.125W	91637	MFF1816D50001B
A6R6017	321-0986-07			RES.,FXD,FILM:25K OHM,0.1%,0.125W	91637	MFF1816C25001B
A6R6018	321-0380-00			RES.,FXD,FILM:88.7K OHM,1%,0.125W	91637	MFF1816G88701F
A6R6019	321-0252-00			RES.,FXD,FILM:4.12K OHM,1%,0.125W	91637	MFF1816G41200F
A6R6020	321-0790-00			RES.,FXD,FILM:990K OHM,1%,0.125W	14298	AME55D9903F
A6R6021	321-0983-00			RES.,FXD,FILM:4.5M OHM,1%,0.125W	91637	CM110216G45003F
A6R6022	321-0296-00			RES.,FXD,FILM:11.8K OHM,1%,0.125W	91637	MFF1816G11801F
A6R6026	323-0498-04			RES.,FXD,FILM:1.5M OHM,0.1%,0.50W	91637	HFF129D15003B
A6R6027	323-0481-04			RES.,FXD,FILM:1M OHM,0.1%,0.50W	91637	MFF1226D10003B
A6R6032	321-0648-04			RES.,FXD,FILM:500K OHM,0.1%,0.125W	91637	CMF110216D5002B
A6R6033	321-0618-04			RES.,FXD,FILM:250K OHM,0.1%,0.125W	07716	OBD
A6R6034	321-0414-04			RES.,FXD,FILM:200K OHM,0.1%,0.125W	91637	MFF1816D20002B
A6R6035	321-0385-04			RES.,FXD,FILM:100K OHM,0.1%,0.125W	91637	MFF1816D10002B
A6R6036	321-0756-04			RES.,FXD,FILM:50K OHM,0.1%,0.125W	91637	MFF1816D50001B
A6R6037	321-0986-07			RES.,FXD,FILM:25K OHM,0.1%,0.125W	91637	MFF1816C25001B
A6R6038	321-0383-00			RES.,FXD,FILM:95.3K OHM,1%,0.125W	91637	MFF1816G95301F
A6R6044	315-0473-00			RES.,FXD,CMPSN:47K OHM,5%,0.25W	01121	CB4735
A6R6045	321-0262-00			RES.,FXD,FILM:5.23K OHM,1%,0.125W	91637	MFF1816G52300F
A6R6046	321-0496-00			RES.,FXD,FILM:1.43M OHM,1%,0.125W	91637	HFF1813G14303F
A6R6047	321-0431-00			RES.,FXD,FILM:301K OHM,1%,0.125W	91637	MFF1816G30102F
A6R6052	311-1245-00			RES.,VAR,NONWIR:10K OHM,10%,0.50W	73138	72-28-0
A6R6053	311-1245-00			RES.,VAR,NONWIR:10K OHM,10%,0.50W	73138	72-28-0
A6R6054	321-0458-00			RES.,FXD,FILM:576K OHM,1%,0.125W	91637	MFF1816G57602F

http://manoman.sqhill.com

Component No.	Tektronix Part No.	Serial/Model No. Eff	Dscont	Name & Description	Mfr Code	Mfr Part Number
A6R6056	315-0472-00			RES.,FXD,CMPSN:4.7K OHM,5%,0.25W	01121	CB4725
A6R6060	315-0331-00			RES.,FXD,CMPSN:330 OHM,5%,0.25W	01121	CB3315
A6R6114	321-0338-00			RES.,FXD,FILM:32.4K OHM,1%,0.125W	91637	MFF1816G32401F
A6R6115	321-0429-00			RES.,FXD,FILM:287K OHM,1%,0.125W	91637	MFF1816G28702F
A6R6123	321-0481-00			RES.,FXD,FILM:1M OHM,1%,0.125W	24546	NA4D1004F
A6R6152	311-1238-00			RES.,VAR,NONWIR:5K OHM,10%,0.50W	73138	72X-27-0-502K
A6R6155	----- -----			(SEE CHASSIS PARTS)		
A6R6212	315-0561-00			RES.,FXD,CMPSN:560 OHM,5%,0.25W	01121	CB5615
A6R6213	315-0302-00			RES.,FXD,CMPSN:3K OHM,5%,0.25W	01121	CB3025
A6R6217	315-0682-00			RES.,FXD,CMPSN:6.8K OHM,5%,0.25W	01121	CB6825
A6S6111	----- -----			(SEE CHASSIS PARTS)		
A6S6155	----- -----			(SEE CHASSIS PARTS)		
A6S6205	260-1422-00			SWITCH,PUSH:3 STA,INTERLOCK	80009	260-1422-00
A6S6260	260-1945-00			SWITCH,PUSH:3 BTN,2 POLE,1 BTN BLANK	80009	260-1945-00
A6VR6057	152-0395-00			SEMICOND DEVICE:ZENER,0.4W,4.3V,5%	14552	TD332317
A6VR6058	152-0166-00			SEMICOND DEVICE:ZENER,0.4W,6.2V,5%	04713	SZ11738

http://manoman.sqhill.com

Component No.	Tektronix Part No.	Serial/Model No. Eff	Dscont	Name & Description	Mfr Code	Mfr Part Number
A7	----- -----			CKT BOARD ASSY:TRIGGER GEN & SWEEP LOGIC		
A7C7006	281-0603-00			CAP.,FXD,CER DI:39PF,5%,500V	72982	308-000C0G0390J
A7C7008	281-0579-00			CAP.,FXD,CER DI:21PF,5%,500V	72982	301-050C0G0210J
A7C7018	281-0815-00			CAP.,FXD,CER DI:0.027UF,20%,50V	72982	8005D9AABW5R273M
A7C7019	281-0759-00			CAP.,FXD,CER DI:22PF,10%,100V	72982	8035D9AADC1G220K
A7C7025	281-0773-00			CAP.,FXD,CER DI:0.01UF,10%,100V	72982	8005H9AADW5R103K
A7C7027	281-0773-00			CAP.,FXD,CER DI:0.01UF,10%,100V	72982	8005H9AADW5R103K
A7C7028	281-0773-00			CAP.,FXD,CER DI:0.01UF,10%,100V	72982	8005H9AADW5R103K
A7C7052	290-0183-00			CAP.,FXD,ELCTLT:1UF,10%,35V	90201	TAE105K035P1A
A7C7108	281-0813-00			CAP.,FXD CER DI:0.047UF,20%,100V	04222	GC705-E-473M
A7C7116	281-0814-00			CAP.,FXD,CER DI:100PF,10%,100V	04222	GC70-1-A101K
A7C7127	290-0808-00			CAP.,FXD,ELCTLT:2.7UF,10%,20V	56289	162D275X9020CD2
A7C7128	281-0759-00			CAP.,FXD,CER DI:22PF,10%,100V	72982	8035D9AADC1G220K
A7C7134	281-0773-00			CAP.,FXD,CER DI:0.01UF,10%,100V	72982	8005H9AADW5R103K
A7C7158	281-0775-00			CAP.,FXD,CER DI:0.1UF,20%,50V	72982	8005D9AABZ5U104M
A7C7165	281-0814-00			CAP.,FXD,CER DI:100PF,10%,100V	04222	GC70-1-A101K
A7C7174	281-0786-00			CAP.,FXD,CER DI:150PF,10%,100V	72982	8035D2AADX5P151K
A7C7182	281-0547-00			CAP.,FXD,CER DI:2.7PF,10%,500V	72982	301-000C0J0279C
A7C7187	281-0547-00			CAP.,FXD,CER DI:2.7PF,10%,500V	72982	301-000C0J0279C
A7C7188	281-0775-00			CAP.,FXD,CER DI:0.1UF,20%,50V	72982	8005D9AABZ5U104M
A7C7192	281-0773-00			CAP.,FXD,CER DI:0.01UF,10%,100V	72982	8005H9AADW5R103K
A7C7196	290-0527-00			CAP.,FXD,ELCTLT:15UF,20%,20V	90201	TDC156M020FL
A7C7197	290-0527-00			CAP.,FXD,ELCTLT:15UF,20%,20V	90201	TDC156M020FL
A7C7227	281-0773-00			CAP.,FXD,CER DI:0.01UF,10%,100V	72982	8005H9AADW5R103K
A7C7229	281-0773-00			CAP.,FXD,CER DI:0.01UF,10%,100V	72982	8005H9AADW5R103K
A7C7244	290-0808-00			CAP.,FXD,ELCTLT:2.7UF,10%,20V	56289	162D275X9020CD2
A7C7247	290-0808-00			CAP.,FXD,ELCTLT:2.7UF,10%,20V	56289	162D275X9020CD2
A7C7263	290-0808-00			CAP.,FXD,ELCTLT:2.7UF,10%,20V	56289	162D275X9020CD2
A7C7265	290-0808-00			CAP.,FXD,ELCTLT:2.7UF,10%,20V	56289	162D275X9020CD2
A7C7273	290-0183-00			CAP.,FXD,ELCTLT:1UF,10%,35V	90201	TAE105K035P1A
A7C7286	281-0775-00			CAP.,FXD,CER DI:0.1UF,20%,50V	72982	8005D9AABZ5U104M
A7C7288	290-0527-00			CAP.,FXD,ELCTLT:15UF,20%,20V	90201	TDC156M020FL
A7C7297	281-0775-00			CAP.,FXD,CER DI:0.1UF,20%,50V	72982	8005D9AABZ5U104M
A7C7303	290-0808-00			CAP.,FXD,ELCTLT:2.7UF,10%,20V	56289	162D275X9020CD2
A7C7313	281-0815-00			CAP.,FXD,CER DI:0.027UF,20%,50V	72982	8005D9AABW5R273M
A7C7317	281-0814-00			CAP.,FXD,CER DI:100PF,10%,100V	04222	GC70-1-A101K
A7C7321	281-0773-00			CAP.,FXD,CER DI:0.01UF,10%,100V	72982	8005H9AADW5R103K
A7C7329	281-0759-00			CAP.,FXD,CER DI:22PF,10%,100V	72982	8035D9AADC1G220K
A7C7371	281-0797-00			CAP.,FXD,CER DI:15PF,10%,100V	72982	8035D9AADC0G150K
A7C7376	281-0786-00			CAP.,FXD,CER DI:150PF,10%,100V	72982	8035D2AADX5P151K
A7C7377	290-0808-00			CAP.,FXD,ELCTLT:2.7UF,10%,20V	56289	162D275X9020CD2
A7C7404	281-0579-00			CAP.,FXD,CER DI:21PF,5%,500V	72982	301-050C0G0210J
A7C7406	281-0814-00			CAP.,FXD,CER DI:100PF,10%,100V	04222	GC70-1-A101K
A7C7425	281-0158-00			CAP.,VAR,CER DI:7-45PF,50V	73899	DVJ-5006
A7C7435	283-0116-00			CAP.,FXD,CER DI:820PF,5%,500V	72982	801-547B821J
A7C7442	281-0775-00			CAP.,FXD,CER DI:0.1UF,20%,50V	72982	8005D9AABZ5U104M
A7C7443	281-0773-00			CAP.,FXD,CER DI:0.01UF,10%,100V	72982	8005H9AADW5R103K
A7C7447	281-0773-00			CAP.,FXD,CER DI:0.01UF,10%,100V	72982	8005H9AADW5R103K
A7C7449	281-0814-00			CAP.,FXD,CER DI:100PF,10%,100V	04222	GC70-1-A101K
A7C7453	281-0797-00	XB011240		CAP.,FXD,CER DI:15PF,10%,100V	72982	8035D9AADC0G150K
A7C7458	281-0775-00			CAP.,FXD,CER DI:0.1UF,20%,50V	72982	8005D9AABZ5U104M
A7C7461	281-0814-00			CAP.,FXD,CER DI:100PF,10%,100V	04222	GC70-1-A101K
A7C7471	290-0301-00			CAP.,FXD,ELCTLT:10UF,10%,20V	56289	150D106X9020B2
A7C7505	281-0207-00			CAP.,VAR,PLSTC:2-18PF,100V	80031	2807C00218MH02F0
A7C7506	281-0217-00			CAP.,VAR,CER DI:0.5-3.5PF,400V	52763	RT202-08SB.6/3.5
A7C7507	290-0808-00			CAP.,FXD,ELCTLT:2.7UF,10%,20V	56289	162D275X9020CD2
A7C7508	281-0811-00			CAP.,FXD,CER DI:10PF,10%,100V	72982	8035D2AADC1G100K

http://manoman.sqhill.com

Component No.	Tektronix Part No.	Serial/Model No. Eff	Dscont	Name & Description	Mfr Code	Mfr Part Number
A7C7517	281-0759-00			CAP.,FXD,CER DI:22PF,10%,100V	72982	8035D9AADC1G220K
A7C7519	281-0812-00			CAP.,FXD,CER DI:1000PF,10%,100V	72982	8035D9AADX7R102K
A7C7529	281-0122-00			CAP.,VAR,CER DI:2.5-9PF,100V	72982	518-000A2.5-9
A7C7536	281-0775-00			CAP.,FXD,CER DI:0.1UF,20%,50V	72982	8005D9AABZ5U104M
A7C7565	281-0775-00			CAP.,FXD,CER DI:0.1UF,20%,50V	72982	8005D9AABZ5U104M
A7CR7046	152-0141-02			SEMICOND DEVICE:SILICON,30V,150MA	01295	1N4152R
A7CR7072	152-0141-02			SEMICOND DEVICE:SILICON,30V,150MA	01295	1N4152R
A7CR7073	152-0141-02			SEMICOND DEVICE:SILICON,30V,150MA	01295	1N4152R
A7CR7078	152-0141-02			SEMICOND DEVICE:SILICON,30V,150MA	01295	1N4152R
A7CR7084	152-0141-02			SEMICOND DEVICE:SILICON,30V,150MA	01295	1N4152R
A7CR7085	152-0141-02			SEMICOND DEVICE:SILICON,30V,150MA	01295	1N4152R
A7CR7097	152-0141-02			SEMICOND DEVICE:SILICON,30V,150MA	01295	1N4152R
A7CR7098	152-0141-02			SEMICOND DEVICE:SILICON,30V,150MA	01295	1N4152R
A7CR7099	152-0141-02			SEMICOND DEVICE:SILICON,30V,150MA	01295	1N4152R
A7CR7120	152-0246-00			SEMICOND DEVICE:SW,SI,40V,200MA	03508	DE140
A7CR7146	152-0141-02			SEMICOND DEVICE:SILICON,30V,150MA	01295	1N4152R
A7CR7147	152-0125-01			SEMICOND DEVICE:TUNNEL,4.7MA,18PF	03508	STD704
A7CR7148	152-0125-01			SEMICOND DEVICE:TUNNEL,4.7MA,18PF	03508	STD704
A7CR7149	152-0322-00			SEMICOND DEVICE:SILICON,15V,HOT CARRIER	50434	5082-2672
A7CR7154	152-0141-02			SEMICOND DEVICE:SILICON,30V,150MA	01295	1N4152R
A7CR7184	152-0141-02			SEMICOND DEVICE:SILICON,30V,150MA	01295	1N4152R
A7CR7272	152-0141-02			SEMICOND DEVICE:SILICON,30V,150MA	01295	1N4152R
A7CR7277	152-0141-02			SEMICOND DEVICE:SILICON,30V,150MA	01295	1N4152R
A7CR7281	152-0141-02			SEMICOND DEVICE:SILICON,30V,150MA	01295	1N4152R
A7CR7322	152-0246-00			SEMICOND DEVICE:SW,SI,40V,200MA	03508	DE140
A7CR7349	152-0125-01			SEMICOND DEVICE:TUNNEL,4.7MA,18PF	03508	STD704
A7CR7350	152-0125-01			SEMICOND DEVICE:TUNNEL,4.7MA,18PF	03508	STD704
A7CR7362	152-0141-02			SEMICOND DEVICE:SILICON,30V,150MA	01295	1N4152R
A7CR7381	152-0141-02			SEMICOND DEVICE:SILICON,30V,150MA	01295	1N4152R
A7CR7382	152-0141-02			SEMICOND DEVICE:SILICON,30V,150MA	01295	1N4152R
A7CR7383	152-0141-02			SEMICOND DEVICE:SILICON,30V,150MA	01295	1N4152R
A7CR7385	152-0141-02			SEMICOND DEVICE:SILICON,30V,150MA	01295	1N4152R
A7CR7386	152-0141-02			SEMICOND DEVICE:SILICON,30V,150MA	01295	1N4152R
A7CR7387	152-0141-02			SEMICOND DEVICE:SILICON,30V,150MA	01295	1N4152R
A7CR7449	152-0141-02			SEMICOND DEVICE:SILICON,30V,150MA	01295	1N4152R
A7CR7463	152-0141-02			SEMICOND DEVICE:SILICON,30V,150MA	01295	1N4152R
A7CR7464	152-0141-02			SEMICOND DEVICE:SILICON,30V,150MA	01295	1N4152R
A7CR7521	152-0141-02			SEMICOND DEVICE:SILICON,30V,150MA	01295	1N4152R
A7CR7536	152-0141-02			SEMICOND DEVICE:SILICON,30V,150MA	01295	1N4152R
A7J4541	136-0499-14			CONNECTOR,RCPT,:14 CONTACT	00779	4-380949-4
A7J4571	136-0499-10			CONNECTOR,RCPT,:10 CONTACT	00779	4-380949-0
A7L7043	108-0370-00			COIL,RF:0.14UH	80009	108-0370-00
A7L7137	108-0370-00			COIL,RF:0.14UH	80009	108-0370-00
A7L7278	108-0538-00			COIL,RF:2.7UH	76493	70F276A1
A7L7341	108-0370-00			COIL,RF:0.14UH	80009	108-0370-00
A7L7441	108-0370-00			COIL,RF:0.14UH	80009	108-0370-00
A7L7525	108-0655-00			COIL,RF:FIXED,75NH	80009	108-0655-00
A7Q7053	151-0220-03			TRANSISTOR:SILICON,PNP,SEL	80009	151-0220-03
A7Q7055	151-0220-03			TRANSISTOR:SILICON,PNP,SEL	80009	151-0220-03
A7Q7067	151-0232-00			TRANSISTOR:SILICON,NPN,DUAL	80009	151-0232-00
A7Q7074	151-0220-03			TRANSISTOR:SILICON,PNP,SEL	80009	151-0220-03
A7Q7075	151-0220-03			TRANSISTOR:SILICON,PNP,SEL	80009	151-0220-03
A7Q7076	151-0190-00			TRANSISTOR:SILICON,NPN	07263	S032677
A7Q7083	151-0220-03			TRANSISTOR:SILICON,PNP,SEL	80009	151-0220-03
A7Q7092	151-0220-03			TRANSISTOR:SILICON,PNP,SEL	80009	151-0220-03
A7Q7093	151-0190-00			TRANSISTOR:SILICON,NPN	07263	S032677
A7Q7095	151-0190-00			TRANSISTOR:SILICON,NPN	07263	S032677

http://manoman.sqhill.com

Component No.	Tektronix Part No.	Serial/Model No. Eff	Dscont	Name & Description	Mfr Code	Mfr Part Number
A7Q7124A,B	151-1042-00			SEMICOND DVC SE:MATCHED PAIR FET	27014	SF50D31
A7Q7142	151-0221-00			TRANSISTOR:SILICON,PNP	04713	SPS246
A7Q7143	151-0221-00			TRANSISTOR:SILICON,PNP	04713	SPS246
A7Q7155	151-0220-03			TRANSISTOR:SILICON,PNP,SEL	80009	151-0220-03
A7Q7174	151-0190-00			TRANSISTOR:SILICON,NPN	07263	S032677
A7Q7181	151-0190-00			TRANSISTOR:SILICON,NPN	07263	S032677
A7Q7182	151-0190-00			TRANSISTOR:SILICON,NPN	07263	S032677
A7Q7195	151-0190-00			TRANSISTOR:SILICON,NPN	07263	S032677
A7Q7254	151-0220-03			TRANSISTOR:SILICON,PNP,SEL	80009	151-0220-03
A7Q7256	151-0220-03			TRANSISTOR:SILICON,PNP,SEL	80009	151-0220-03
A7Q7324A,B	151-1042-00			SEMICOND DVC SE:MATCHED PAIR FET	27014	SF50031
A7Q7344	151-0221-00			TRANSISTOR:SILICON,PNP	04713	SPS246
A7Q7345	151-0221-00			TRANSISTOR:SILICON,PNP	04713	SPS246
A7Q7422	151-0441-00			TRANSISTOR:SILICON,NPN	04713	SRF501
A7Q7424	151-0441-00			TRANSISTOR:SILICON,NPN	04713	SRF501
A7Q7460	151-0220-03			TRANSISTOR:SILICON,PNP,SEL	80009	151-0220-03
A7Q7465	151-0190-00			TRANSISTOR:SILICON,NPN	07263	S032677
A7R7009	315-0334-00			RES.,FXD,CMPSN:330K OHM,5%,0.25W	01121	CB3345
A7R7014	315-0104-00			RES.,FXD,CMPSN:100K OHM,5%,0.25W	01121	CB1045
A7R7020	315-0101-00			RES.,FXD,CMPSN:100 OHM,5%,0.25W	01121	CB1015
A7R7024	315-0101-00			RES.,FXD,CMPSN:100 OHM,5%,0.25W	01121	CB1015
A7R7025	315-0101-00			RES.,FXD,CMPSN:100 OHM,5%,0.25W	01121	CB1015
A7R7026	311-1558-00			RES.,VAR,NONWIR:20K OHM,20%,0.50W	73138	91-80-0
A7R7027	315-0101-00			RES.,FXD,CMPSN:100 OHM,5%,0.25W	01121	CB1015
A7R7028	315-0681-00			RES.,FXD,CMPSN:680 OHM,5%,0.25W	01121	CB6815
A7R7029	321-0209-00			RES.,FXD,FILM:1.47K OHM,1%,0.125W	91637	MFF1816G14700F
A7R7032	315-0202-00			RES.,FXD,CMPSN:2K OHM,5%,0.25W	01121	CB2025
A7R7033	315-0560-00			RES.,FXD,CMPSN:56 OHM,5%,0.25W	01121	CB5605
A7R7034	315-0222-00			RES.,FXD,CMPSN:2.2K OHM,5%,0.25W	01121	CB2225
A7R7035	315-0682-00			RES.,FXD,CMPSN:6.8K OHM,5%,0.25W	01121	CB6825
A7R7036	315-0182-00			RES.,FXD,CMPSN:1.8K OHM,5%,0.25W	01121	CB1825
A7R7037	315-0182-00			RES.,FXD,CMPSN:1.8K OHM,5%,0.25W	01121	CB1825
A7R7038	315-0103-00			RES.,FXD,CMPSN:10K OHM,5%,0.25W	01121	CB1035
A7R7042	311-1558-00			RES.,VAR,NONWIR:20K OHM,20%,0.50W	73138	91-80-0
A7R7043	315-0101-00			RES.,FXD,CMPSN:100 OHM,5%,0.25W	01121	CB1015
A7R7044	315-0274-00			RES.,FXD,CMPSN:270K OHM,5%,0.25W	01121	CB2745
A7R7045	311-1558-00			RES.,VAR,NONWIR:20K OHM,20%,0.50W	73138	91-80-D
A7R7046	315-0104-00			RES.,FXD,CMPSN:100K OHM,5%,0.25W	01121	CB1045
A7R7047	315-0330-00			RES.,FXD,CMPSN:33 OHM,5%,0.25W	01121	CB3305
A7R7048	315-0562-00			RES.,FXD,CMPSN:5.6K OHM,5%,0.25W	01121	CB5625
A7R7049	315-0390-00			RES.,FXD,CMPSN:39 OHM,5%,0.25W	01121	CB3905
A7R7052	321-0200-00			RES.,FXD,FILM:1.18K OHM,1%,0.125W	91637	MFF1816G11800F
A7R7056	315-0151-00			RES.,FXD,CMPSN:150 OHM,5%,0.25W	01121	CB1515
A7R7057	315-0332-00			RES.,FXD,CMPSN:3.3K OHM,5%,0.25W	01121	CB3325
A7R7062	315-0101-00			RES.,FXD,CMPSN:100 OHM,5%,0.25W	01121	CB1015
A7R7063	315-0681-00			RES.,FXD,CMPSN:680 OHM,5%,0.25W	01121	CB6815
A7R7064	315-0752-00			RES.,FXD,CMPSN:7.5K OHM,5%,0.25W	01121	CB7525
A7R7065	315-0681-00			RES.,FXD,CMPSN:680 OHM,5%,0.25W	01121	CB6815
A7R7066	315-0101-00			RES.,FXD,CMPSN:100 OHM,5%,0.25W	01121	CB1015
A7R7068	315-0562-00			RES.,FXD,CMPSN:5.6K OHM,5%,0.25W	01121	CB5625
A7R7069	301-0622-00			RES.,FXD,CMPSN:6.2K OHM,5%,0.50W	01121	EB6225
A7R7070	315-0102-00			RES.,FXD,CMPSN:1K OHM,5%,0.25W	01121	CB1025
A7R7077	301-0471-00			RES.,FXD,CMPSN:470 OHM,5%,0.50W	01121	EB4715
A7R7078	301-0471-00			RES.,FXD,CMPSN:470 OHM,5%,0.50W	01121	EB4715
A7R7079	321-0155-00			RES.,FXD,FILM:402 OHM,1%,0.125W	91637	MFF1816G402R0F
A7R7084	315-0911-00			RES.,FXD,CMPSN:910 OHM,5%,0.25W	01121	CB9115
A7R7085	315-0221-00			RES.,FXD,CMPSN:220 OHM,5%,0.25W	01121	CB2215

http://manoman.sqhill.com

Component No.	Tektronix Part No.	Serial/Model No. Eff	Dscont	Name & Description	Mfr Code	Mfr Part Number
A7R7086	315-0221-00			RES.,FXD,CMPSN:220 OHM,5%,0.25W	01121	CB2215
A7R7087	321-0155-00			RES.,FXD,FILM:402 OHM,1%,0.125W	91637	MFF1816G402R0F
A7R7088	321-0215-00			RES.,FXD,FILM:1.69K OHM,1%,0.125W	91637	MFF1816G16900F
A7R7097	315-0472-00			RES.,FXD,CMPSN:4.7K OHM,5%,0.25W	01121	CB4725
A7R7098	315-0911-00			RES.,FXD,CMPSN:910 OHM,5%,0.25W	01121	CB9115
A7R7106	315-0754-00			RES.,FXD,CMPSN:750K OHM,5%,0.25W	01121	CB7545
A7R7108	315-0101-00			RES.,FXD,CMPSN:100 OHM,5%,0.25W	01121	CB1015
A7R7111	315-0563-00			RES.,FXD,CMPSN:56K OHM,5%,0.25W	01121	CB5635
A7R7119	321-0481-00			RES.,FXD,FILM:1M OHM,1%,0.125W	24546	NA4D1004F
A7R7121	315-0150-00			RES.,FXD,CMPSN:15 OHM,5%,0.25W	01121	CB1505
A7R7125	315-0150-00			RES.,FXD,CMPSN:15 OHM,5%,0.25W	01121	CB1505
A7R7126	321-0209-00			RES.,FXD,FILM:1.47K OHM,1%,0.125W	91637	MFF1816G14700F
A7R7128	315-0390-00			RES.,FXD,CMPSN:39 OHM,5%,0.25W	01121	CB3905
A7R7132	315-0362-00			RES.,FXD,CMPSN:3.6K OHM,5%,0.25W	01121	CB3625
A7R7133	315-0102-00			RES.,FXD,CMPSN:1K OHM,5%,0.25W	01121	CB1025
A7R7134	315-0331-00			RES.,FXD,CMPSN:330 OHM,5%,0.25W	01121	CB3315
A7R7135	315-0153-00			RES.,FXD,CMPSN:15K OHM,5%,0.25W	01121	CB1535
A7R7142	315-0101-00			RES.,FXD,CMPSN:100 OHM,5%,0.25W	01121	CB1015
A7R7143	315-0274-00			RES.,FXD,CMPSN:270K OHM,5%,0.25W	01121	CB2745
A7R7145	315-0330-00			RES.,FXD,CMPSN:33 OHM,5%,0.25W	01121	CB3305
A7R7147	321-0097-00			RES.,FXD,FILM:100 OHM,1%,0.125W	91637	MFF1816G100R0F
A7R7149	321-0258-00			RES.,FXD,FILM:4.75K OHM,1%,0.125W	91637	MFF1816G47500F
A7R7150	323-0310-00			RES.,FXD,FILM:16.5K OHM,1%,0.50W	75042	CECT0-1652F
A7R7152	315-0331-00			RES.,FXD,CMPSN:330 OHM,5%,0.25W	01121	CB3315
A7R7154	315-0681-00			RES.,FXD,CMPSN:680 OHM,5%,0.25W	01121	CB6815
A7R7155	315-0681-00			RES.,FXD,CMPSN:680 OHM,5%,0.25W	01121	CB6815
A7R7157	321-0186-00			RES.,FXD,FILM:845 OHM,1%,0.125W	91637	MFF1816G845R0F
A7R7159	315-0270-00			RES.,FXD,CMPSN:27 OHM,5%,0.25W	01121	CB2705
A7R7162	315-0132-00			RES.,FXD,CMPSN:1.3K OHM,5%,0.25W	01121	CB1325
A7R7164	301-0562-00			RES.,FXD,CMPSN:5.6K OHM,5%,0.50W	01121	EB5625
A7R7165	315-0561-00			RES.,FXD,CMPSN:560 OHM,5%,0.25W	01121	CB5615
A7R7166	321-0206-00			RES.,FXD,FILM:1.37K OHM,1%,0.125W	91637	MFF1816G13700F
A7R7167	321-0243-00			RES.,FXD,FILM:3.32K OHM,1%,0.125W	91637	MFF1816G33200F
A7R7171	315-0752-00			RES.,FXD,CMPSN:7.5K OHM,5%,0.25W	01121	CB7525
A7R7173	315-0102-00			RES.,FXD,CMPSN:1K OHM,5%,0.25W	01121	CB1025
A7R7175	321-0155-00			RES.,FXD,FILM:402 OHM,1%,0.125W	91637	MFF1816G402R0F
A7R7176	321-0209-00			RES.,FXD,FILM:1.47K OHM,1%,0.125W	91637	MFF1816G14700F
A7R7177	321-0171-00			RES.,FXD,FILM:590 OHM,1%,0.125W	91637	MFF1816G590R0F
A7R7178	321-0192-00			RES.,FXD,FILM:976 OHM,1%,0.125W	91637	MFF1816G976R0F
A7R7179	321-0227-00			RES.,FXD,FILM:2.26K OHM,1%,0.125W	91637	MFF1816G22600F
A7R7184	315-0472-00			RES.,FXD,CMPSN:4.7K OHM,5%,0.25W	01121	CB4725
A7R7186	321-0192-00			RES.,FXD,FILM:976 OHM,1%,0.125W	91637	MFF1816G976R0F
A7R7187	321-0171-00			RES.,FXD,FILM:590 OHM,1%,0.125W	91637	MFF1816G590R0F
A7R7188	315-0220-00			RES.,FXD,CMPSN:22 OHM,5%,0.25W	01121	CB2205
A7R7192	321-0231-00			RES.,FXD,FILM:2.49K OHM,1%,0.125W	91637	MFF1816G24900F
A7R7194	321-0264-00			RES.,FXD,FILM:5.49K OHM,1%,0.125W	91637	MFF1816G54900F
A7R7196	315-0182-00			RES.,FXD,CMPSN:1.8K OHM,5%,0.25W	01121	CB1825
A7R7197	321-0155-00			RES.,FXD,FILM:402 OHM,1%,0.125W	91637	MFF1816G402R0F
A7R7208	321-0068-00			RES.,FXD,FILM:49.9 OHM,1%,0.125W	91637	MFF1816G49R90F
A7R7213	321-0068-00			RES.,FXD,FILM:49.9 OHM,1%,0.125W	91637	MFF1816G49R90F
A7R7218	321-0068-00			RES.,FXD,FILM:49.9 OHM,1%,0.125W	91637	MFF1816G49R90F
A7R7224	311-1558-00			RES.,VAR,NONWIR:20K OHM,20%,0.50W	73138	91-80-0
A7R7226	315-0202-00			RES.,FXD,CMPSN:2K OHM,5%,0.25W	01121	CB2025
A7R7228	315-0681-00			RES.,FXD,CMPSN:680 OHM,5%,0.25W	01121	CB6815
A7R7229	315-0101-00			RES.,FXD,CMPSN:100 OHM,5%,0.25W	01121	CB1015
A7R7232	321-0209-00			RES.,FXD,FILM:1.47K OHM,1%,0.125W	91637	MFF1816G14700F
A7R7233	315-0560-00			RES.,FXD,CMPSN:56 OHM,5%,0.25W	01121	CB5605

http://manoman.sqhill.com

Component No.	Tektronix Part No.	Serial/Model No. Eff	Dscont	Name & Description	Mfr Code	Mfr Part Number
A7R7234	315-0182-00			RES.,FXD,CMPSN:1.8K OHM,5%,0.25W	01121	CB1825
A7R7235	315-0222-00			RES.,FXD,CMPSN:2.2K OHM,5%,0.25W	01121	CB2225
A7R7236	315-0682-00			RES.,FXD,CMPSN:6.8K OHM,5%,0.25W	01121	CB6825
A7R7237	315-0182-00			RES.,FXD,CMPSN:1.8K OHM,5%,0.25W	01121	CB1825
A7R7238	315-0103-00			RES.,FXD,CMPSN:10K OHM,5%,0.25W	01121	CB1035
A7R7242	311-1558-00			RES.,VAR,NONWIR:20K OHM,20%,0.50W	73138	91-80-0
A7R7243	315-0274-00			RES.,FXD,CMPSN:270K OHM,5%,0.25W	01121	CB2745
A7R7246	311-1558-00			RES.,VAR,NONWIR:20K OHM,20%,0.50W	73138	91-80-0
A7R7248	315-0562-00			RES.,FXD,CMPSN:5.6K OHM,5%,0.25W	01121	CB5625
A7R7253	321-0196-00			RES.,FXD,FILM:1.07K OHM,1%,0.125W	91637	MFF1816G10700F
A7R7264	315-0331-00			RES.,FXD,CMPSN:330 OHM,5%,0.25W	01121	CB3315
A7R7267	315-0472-00			RES.,FXD,CMPSN:4.7K OHM,5%,0.25W	01121	CB4725
A7R7269	315-0331-00			RES.,FXD,CMPSN:330 OHM,5%,0.25W	01121	CB3315
A7R7272	315-0334-00			RES.,FXD,CMPSN:330K OHM,5%,0.25W	01121	CB3345
A7R7275	315-0102-00			RES.,FXD,CMPSN:1K OHM,5%,0.25W	01121	CB1025
A7R7276	315-0241-00			RES.,FXD,CMPSN:240 OHM,5%,0.25W	01121	CB2415
A7R7277	315-0472-00			RES.,FXD,CMPSN:4.7K OHM,5%,0.25W	01121	CB4725
A7R7281	315-0112-00			RES.,FXD,CMPSN:1.1K OHM,5%,0.25W	01121	CB1125
A7R7283	315-0112-00			RES.,FXD,CMPSN:1.1K OHM,5%,0.25W	01121	CB1125
A7R7284	315-0162-00			RES.,FXD,CMPSN:1.6K OHM,5%,0.25W	01121	CB1625
A7R7287	315-0220-00			RES.,FXD,CMPSN:22 OHM,5%,0.25W	01121	CB2205
A7R7297	315-0220-00			RES.,FXD,CMPSN:22 OHM,5%,0.25W	01121	CB2205
A7R7305	315-0510-00			RES.,FXD,CMPSN:51 OHM,5%,0.25W	01121	CB5105
A7R7306	315-0820-00			RES.,FXD,CMPSN:82 OHM,5%,0.25W	01121	CB8205
A7R7308	315-0241-00			RES.,FXD,CMPSN:240 OHM,5%,0.25W	01121	CB2415
A7R7316	315-0563-00			RES.,FXD,CMPSN:56K OHM,5%,0.25W	01121	CB5635
A7R7319	315-0101-00			RES.,FXD,CMPSN:100 OHM,5%,0.25W	01121	CB1015
A7R7325	315-0150-00			RES.,FXD,CMPSN:15 OHM,5%,0.25W	01121	CB1505
A7R7326	315-0101-00			RES.,FXD,CMPSN:100 OHM,5%,0.25W	01121	CB1015
A7R7327	315-0150-00			RES.,FXD,CMPSN:15 OHM,5%,0.25W	01121	CB1505
A7R7328	315-0270-00			RES.,FXD,CMPSN:27 OHM,5%,0.25W	01121	CB2705
A7R7329	315-0390-00			RES.,FXD,CMPSN:39 OHM,5%,0.25W	01121	CB3905
A7R7342	315-0102-00			RES.,FXD,CMPSN:1K OHM,5%,0.25W	01121	CB1025
A7R7343	315-0101-00			RES.,FXD,CMPSN:100 OHM,5%,0.25W	01121	CB1015
A7R7346	315-0330-00			RES.,FXD,CMPSN:33 OHM,5%,0.25W	01121	CB3305
A7R7347	315-0330-00			RES.,FXD,CMPSN:33 OHM,5%,0.25W	01121	CB3305
A7R7348	315-0390-00			RES.,FXD,CMPSN:39 OHM,5%,0.25W	01121	CB3905
A7R7349	321-0097-00			RES.,FXD,FILM:100 OHM,1%,0.125W	91637	MFF1816G100R0F
A7R7355	315-0471-00			RES.,FXD,CMPSN:470 OHM,5%,0.25W	01121	CB4715
A7R7356	321-0258-00			RES.,FXD,FILM:4.75K OHM,1%,0.125W	91637	MFF1816G47500F
A7R7357	315-0332-00			RES.,FXD,CMPSN:3.3K OHM,5%,0.25W	01121	CB3325
A7R7358	315-0151-00			RES.,FXD,CMPSN:150 OHM,5%,0.25W	01121	CB1515
A7R7361	315-0132-00			RES.,FXD,CMPSN:1.3K OHM,5%,0.25W	01121	CB1325
A7R7365	315-0102-00			RES.,FXD,CMPSN:1K OHM,5%,0.25W	01121	CB1025
A7R7402	321-0790-00			RES.,FXD,FILM:990K OHM,1%,0.125W	14298	AME55D9903F
A7R7404	321-0450-00			RES.,FXD,FILM:475K OHM,1%,0.125W	91637	MFF1816G47502F
A7R7406	321-0381-00			RES.,FXD,FILM:90.9K OHM,1%,0.125W	91637	MFF1816G90901F
A7R7407	315-0270-00			RES.,FXD,CMPSN:27 OHM,5%,0.25W	01121	CB2705
A7R7408	315-0392-00			RES.,FXD,CMPSN:3.9K OHM,5%,0.25W	01121	CB3925
A7R7417	321-0481-00			RES.,FXD,FILM:1M OHM,1%,0.125W	24546	NA4D1004F
A7R7421	315-0101-00			RES.,FXD,CMPSN:100 OHM,5%,0.25W	01121	CB1015
A7R7423	311-1260-00			RES.,VAR,NONWIR:250 OHM,10%,0.50W	32997	3329P-L58-251
A7R7432	315-0270-00			RES.,FXD,CMPSN:27 OHM,5%,0.25W	01121	CB2705
A7R7434	315-0200-00			RES.,FXD,CMPSN:20 OHM,5%,0.25W	01121	CB2005
A7R7435	315-0162-00			RES.,FXD,CMPSN:1.6K OHM,5%,0.25W	01121	CB1625
A7R7436	321-0209-00			RES.,FXD,FILM:1.47K OHM,1%,0.125W	91637	MFF1816G14700F
A7R7437	315-0362-00			RES.,FXD,CMPSN:3.6K OHM,5%,0.25W	01121	CB3625

http://manoman.sqhill.com

Component No.	Tektronix Part No.	Serial/Model No. Eff	Dscont	Name & Description	Mfr Code	Mfr Part Number
A7R7439	311-1567-00			RES.,VAR,NONWIR:TRMR,100 OHM,0.50W	73138	91-89-0
A7R7441	315-0101-00			RES.,FXD,CMPSN:100 OHM,5%,0.25W	01121	CB1015
A7R7444	315-0331-00			RES.,FXD,CMPSN:330 OHM,5%,0.25W	01121	CB3315
A7R7445	315-0274-00			RES.,FXD,CMPSN:270K OHM,5%,0.25W	01121	CB2745
A7R7453	315-0103-00			RES.,FXD,CMPSN:10K OHM,5%,0.25W	01121	CB1035
A7R7455	315-0471-00			RES.,FXD,CMPSN:470 OHM,5%,0.25W	01121	CB4715
A7R7456	321-0200-00			RES.,FXD,FILM:1.18K OHM,1%,0.125W	91637	MFF1816G11800F
A7R7457	315-0270-00			RES.,FXD,CMPSN:27 OHM,5%,0.25W	01121	CB2705
A7R7458	321-0243-00			RES.,FXD,FILM:3.32K OHM,1%,0.125W	91637	MFF1816G33200F
A7R7461	321-0201-00			RES.,FXD,FILM:1.21K OHM,1%,0.125W	91637	MFF1816G12100F
A7R7465	315-0822-00			RES.,FXD,CMPSN:8.2K OHM,5%,0.25W	01121	CB8225
A7R7471	315-0101-00			RES.,FXD,CMPSN:100 OHM,5%,0.25W	01121	CB1015
A7R7503	315-0100-00			RES.,FXD,CMPSN:10 OHM,5%,0.25W	01121	CB1005
A7R7506	325-0245-00			RES.,FXD,FILM:3.32M OHM,1%,0.125W	01121	CC3324FZ
A7R7516	315-0104-00			RES.,FXD,CMPSN:100K OHM,5%,0.25W	01121	CB1045
A7R7519	321-0175-00			RES.,FXD,FILM:649 OHM,1%,0.125W	91637	MFF1816G649R0F
A7R7521	321-0198-00			RES.,FXD,FILM:1.13K OHM,1%,0.125W	91637	MFF1816G11300F
A7R7522	315-0430-00			RES.,FXD,CMPSN:43 OHM,5%,0.25W	01121	CB4305
A7R7525	315-0124-00			RES.,FXD,CMPSN:120K OHM,5%,0.25W	01121	CB1245
A7R7526	311-0622-00			RES.,VAR,NONWIR:100 OHM,10%,0.50W	32997	3326H-G48-101
A7R7533	321-0198-00			RES.,FXD,FILM:1.13K OHM,1%,0.125W	91637	MFF1816G11300F
A7R7534	315-0430-00			RES.,FXD,CMPSN:43 OHM,5%,0.25W	01121	CB4305
A7R7545	323-0310-00			RES.,FXD,FILM:16.5K OHM,1%,0.50W	75042	CECT0-1652F
A7R7565	315-0274-00			RES.,FXD,CMPSN:270K OHM,5%,0.25W	01121	CB2745
A7RT7147	307-0124-00			RES.,THERMAL:5K OHM,10%	50157	1D1618
A7RT7349	307-0124-00			RES.,THERMAL:5K OHM,10%	50157	1D1618
A7S7015	263-0065-00			SW SL ACTR ASSY:B COUPLING,4 OF 5 POSITION	80009	263-0065-00
A7S7112	263-0066-00			SW SL ACTR ASSY:B SOURCE,5 OF6 POSITION	80009	263-0066-00
A7S7312	263-0068-00			SW SL ACTR ASSY:A SOURCE,6 OF6 POSITION	80009	263-0068-00
A7S7415	263-0067-00			SW SL ACTR ASSY:A COUPLING,4 OF 6 POSITION	80009	263-0067-00
A7U7131	155-0032-00			MICROCIRCUIT,LI:ML,PRE-AMPLIFIER	80009	155-0032-00
A7U7331	155-0032-00			MICROCIRCUIT,LI:ML,PRE-AMPLIFIER	80009	155-0032-00
A7U7375	155-0049-00			MICROCIRCUIT,DI:SWEEP CONTROL	80009	155-0049-00
A7VR7047	152-0175-00			SEMICOND DEVICE:ZENER,0.4W,5.6V,5%	04713	SZG35008
A7VR7145	152-0175-00			SEMICOND DEVICE:ZENER,0.4W,5.6V,5%	04713	SZG35008
A7VR7256	152-0227-00			SEMICOND DEVICE:ZENER,0.4W,6.2V,5%	04713	SZ13903
A7VR7275	152-0278-00			SEMICOND DEVICE:ZENER,0.4W,3V,5%	04713	SZG35009K20
A7VR7346	152-0175-00			SEMICOND DEVICE:ZENER,0.4W,5.6V,5%	04713	SZG35008
A7VR7446	152-0175-00			SEMICOND DEVICE:ZENER,0.4W,5.6V,5%	04713	SZG35008
A7VR7520	152-0195-00			SEMICOND DEVICE:ZENER,0.4W,5.1V,5%	04713	SZ11755
A7W7291	131-0566-00			BUS CONDUCTOR:DUMMY RES,2.375,22 AWG	55210	L-2007-1
A7W7292	131-0566-00			BUS CONDUCTOR:DUMMY RES,2.375,22 AWG	55210	L-2007-1
A7W7293	131-0566-00			BUS CONDUCTOR:DUMMY RES,2.375,22 AWG	55210	L-2007-1

http://manoman.sqhill.com

Component No.	Tektronix Part No.	Serial/Model No. Eff	Dscont	Name & Description	Mfr Code	Mfr Part Number
A8	----- -----			CKT BOARD ASSY:FAN MOTOR		
A8B8045	147-0035-00			MOTOR,DC:BRUSHLESS,10-15VDC,145MA	25088	1AD3001-0A
A8C8064	290-0536-00			CAP.,FXD,ELCTLT:10UF,20%,25V	90201	TDC106M025FL
A8CR8042	152-0141-02			SEMICOND DEVICE:SILICON,30V,150MA	01295	1N4152R
A8CR8044	152-0141-02			SEMICOND DEVICE:SILICON,30V,150MA	01295	1N4152R
A8CR8046	152-0141-02			SEMICOND DEVICE:SILICON,30V,150MA	01295	1N4152R
A8CR8048	152-0141-02			SEMICOND DEVICE:SILICON,30V,150MA	01295	1N4152R
A8CR8066	152-0141-02			SEMICOND DEVICE:SILICON,30V,150MA	01295	1N4152R
A8Q8067	151-0301-00			TRANSISTOR:SILICON,PNP	04713	2N2907A
A8R8033	321-0228-00			RES.,FXD,FILM:2.32K OHM,1%,0.125W	91637	MFF1816G23200F
A8R8035	321-0201-00			RES.,FXD,FILM:1.21K OHM,1%,0.125W	91637	MFF1816G12100F
A8R8036	315-0363-00			RES.,FXD,CMPSN:36K OHM,5%,0.25W	01121	CB3635
A8R8054	323-0140-00			RES.,FXD,FILM:280 OHM,1%,0.50W	75042	CECTO-2800F
A8R8056	323-0140-00			RES.,FXD,FILM:280 OHM,1%,0.50W	75042	CECTO-2800F
A8R8058	303-0150-00			RES.,FXD,CMPSN:15 OHM,5%,1W	01121	GB1505
A8R8065	321-0062-00			RES.,FXD,FILM:43.2 OHM,1%,0.125W	91637	MFF1816G43R20F
A8RT8038	307-0124-00			RES.,THERMAL:5K OHM,10%	50157	1D1618
A8U8061	156-0281-00			MICROCIRCUIT,LI:4 TRANSISTOR ARRAY	02735	CA3725

http://manoman.sqhill.com

Component No.	Tektronix Part No.	Serial/Model No. Eff	Dscont	Name & Description	Mfr Code	Mfr Part Number
A9	----- -----			CKT BOARD ASSY:PROBE CODING		
A9DS9040	150-1063-00			LT EMITTING DIO:YELLOW,585 NM,40 MA	72619	550-0305-804
A9DS9060	150-1063-00			LT EMITTING DIO:YELLOW,585 NM,40 MA	72619	550-0305-804
A10	----- -----			CKT BOARD ASSY:CRT SCALE ILLUMINATION		
A10DS14086	150-0129-00			LAMP,INCAND:6.3V,200MA	08806	2112D
A10DS14087	150-0129-00			LAMP,INCAND:6.3V,200MA	08806	2112D
				CHASSIS PARTS		
C30	307-1014-01			ATTENUATOR,FXD:100X	80009	307-1014-01
C31	307-1014-01			ATTENUATOR,FXD:100X	80009	307-1014-01
C32	307-1013-01			ATTENUATOR,FXD:10X	80009	307-1013-01
C33	307-1013-01			ATTENUATOR,FXD:10X	80009	307-1013-01
C34	307-1011-00			ATTENUATOR,FXD:4X	80009	307-1011-00
C35	307-1011-00			ATTENUATOR,FXD:4X	80009	307-1011-0D
C36	307-1010-01			ATTENUATOR,FXD:2X	80009	307-1010-01
C37	307-1010-01			ATTENUATOR,FXD:2X	80009	307-1010-01
C13010	281-0064-00			CAP.,VAR,PLSTC:0.25-1.5PF,600V	72982	530-002
C13012	285-0816-01			CAP.,FXD,PLSTC:0.019UF,10%,600V	80009	285-0816-01
C15101(2)	283-00D0-0D			CAP.,FXD,CER DI:0.001UF,+100-0%,500V	72982	831-516E102P
C15103(2)	283-0000-00			CAP.,FXD,CER DI:0.001UF,+100-0%,500V	72982	831-516E102P
CR14498	152-0333-00			SEMICOND DEVICE:SILICON,55V,200MA	07263	FDH-6012
DL11405	119-0387-00			DELAY LINE,ELEC:120NS,100 OHM	80009	119-0387-00
DS15034	150-1001-02			LT EMITTING DIO:RED,660NM,50MA MAX	80009	15D-1001-02
DS15036	150-1001-02			LT EMITTING DIO:RED,660NM,50MA MAX	80009	150-1001-02
DS15038	150-1001-02			LT EMITTING DIO:RED,660NM,50MA MAX	80009	150-1D01-02
DS16001	150-1001-02			LT EMITTING DIO:RED,660NM,50MA MAX	80009	150-1D01-02
DS16002	150-1001-02			LT EMITTING DIO:RED,660NM,50MA MAX	80009	150-1D01-02
DS17105	150-1017-00			LT EMITTING DIO:GREEN,550NM,55MA MAX	50437	LSM-16L-100
DS17127	150-1032-00			LT EMITTING DIO:YELLOW,580NM,40MA,MAX	53184	XC5566Y
DS17206	150-1001-02			LT EMITTING DIO:RED,660NM,50MA MAX	80009	150-1001-02
F14500	159-0016-00			FUSE,CARTRIDGE:3AG,1.5A,250V,FAST-BLOW	71400	AGC 1 1/2
L14165	108-0714-00			COIL,TUBE DEFLE:Y AXIS ALIGNMENT	80009	108-0714-00
L14176	108-0713-00			COIL,TUBE DEFLE:TRACE ROTATION	80009	108-0713-00
Q4102	151-0349-00			TRANSISTOR:SILICON,NPN,SEL FROM MJE2801	04713	SJE924
Q4190	151-0390-00			TRANSISTOR:SILICON,NPN	04713	SPS3414
Q4301	151-0436-00			TRANSISTOR:SILICON,NPN	80009	151-0436-00
Q4312	151-0390-00			TRANSISTOR:SILICON,NPN	04713	SPS3414
Q4401	151-0349-00			TRANSISTOR:SILICON,NPN,SEL FROM MJE28D1	04713	SJE924
Q14009	151-0140-00			TRANSISTOR:SILICON,NPN	80009	151-0140-00
R6155	311-1701-D0			RES.,VAR,NONWIR:PNL,50K OHM,1W,W/SW	01121	13M213
R13010	315-0750-00			RES.,FXD,CMPSN:75 OHM,5%,0.25W	D1121	CB7505
R14288	311-2047-00			RES.,VAR NONWIR:PNL,5DK/5K OHM,20%,1W	12697	CM41749
R14398	311-1482-00			RES.,VAR,NONWIR:5K OHM,20%,0.50W	01121	W-8070
R14498	311-0608-00			RES.,VAR,NONWIR:2K OHM,10%,0.75W	01121	W8156
R14518	311-1482-00			RES.,VAR,NONWIR:5K OHM,20%,0.50W	01121	W-8070
R15102(2)	315-0103-03			RES.,FXD,CMPSN:1DK OHM,5%,0.25W	D1121	CB1035
R16002	311-1464-00			RES.,VAR,WW:2K OHM,5%,2W	02111	534-264
R17010	311-1192-00			RES.,VAR,NONWIR:10K OHM,20%,1W	71590	BA-232-001
R17305	311-1192-00			RES.,VAR,NONWIR:10K OHM,20%,1W	71590	BA-232-001

http://manoman.sqhill.com

Component No.	Tektronix Part No.	Serial/Model No. Eff	Dscont	Name & Description	Mfr Code	Mfr Part Number
S6111	263-1176-00			SW CAM ACTR AS:TIME/CM	80009	263-1176-00
S6155	----- -----			(SEE R6155)		
S14398	----- -----			(SEE R14398)		
S14500	260-1300-01			SWITCH,SLIDE:DPDT,3A,125V	82389	11A-1354
S14510	260-0834-00			SWITCH,TOGGLE:DPDT,5A,125VAC,0.25-40 THD	09353	U21-SHZQE
S14520	260-0638-00			SW,THERMOSTATIC:10A,240V,OPEN 75 DEG C	93410	430-364
S17010	----- -----			(SEE R17010)		
S17305	----- -----			(SEE R17305)		
T14500	120-0798-01			XFMR,PWR,STPDN:	80009	120-0798-01
V14000	154-0731-00			ELECTRON TUBE:W/ANODE LEAD	80009	154-0731-00

http://manoman.sqhill.com

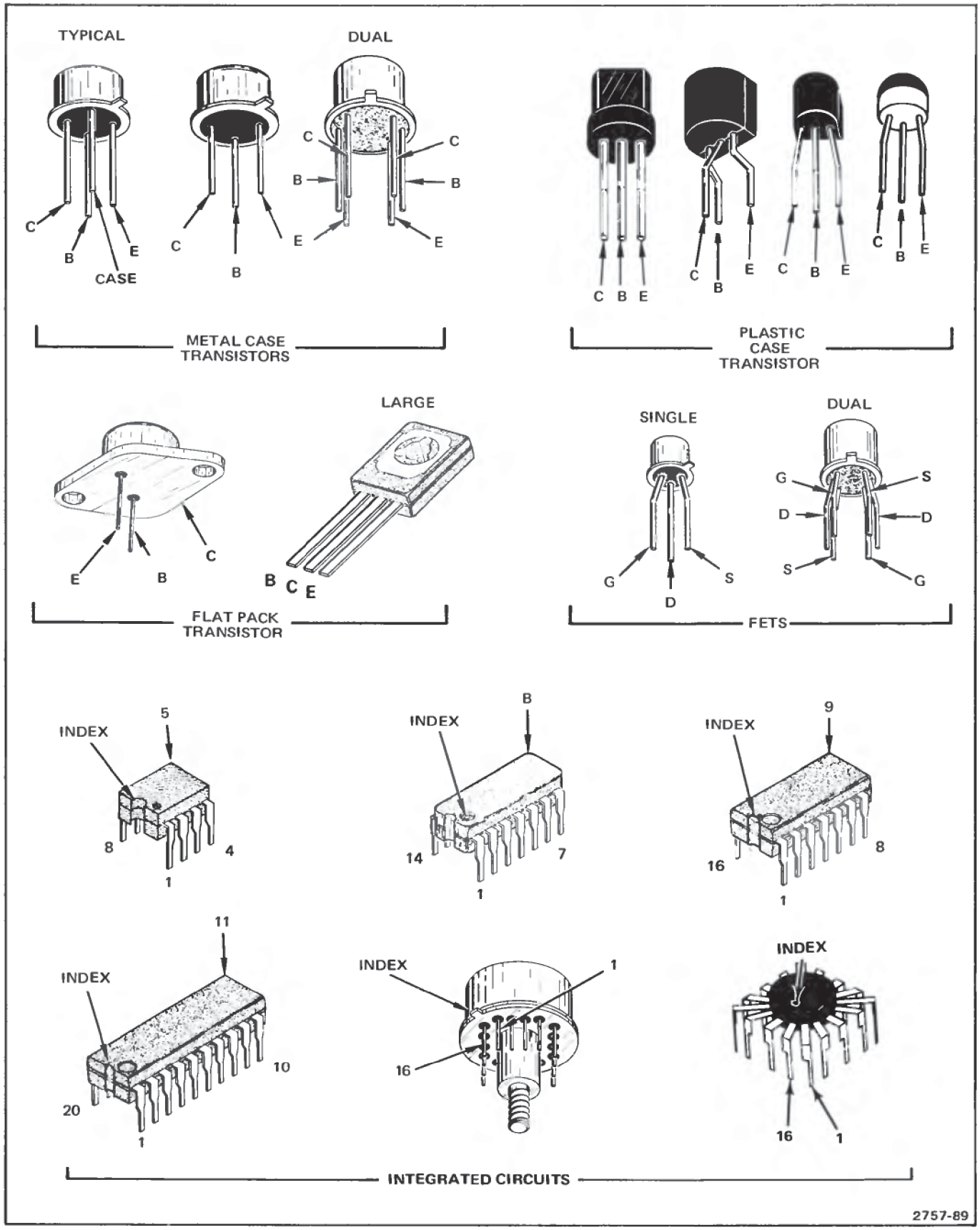

Figure 8-1. Semiconductor lead configurations.

http://manoman.sqhill.com

DIAGRAMS AND CIRCUIT BOARD ILLUSTRATIONS

Symbols

Graphic symbols and class designation letters are based on ANSI Standard Y32.2-1975.

Logic symbology is based on ANSI Y32.14-1973 in terms of positive logic. Logic symbols depict the logic function performed and may differ from the manufacturer's data.

The overline on a signal name indicates that the signal performs its intended function when it is in the low state.

Abbreviations are based on ANSI Y1.1-1972.

Other ANSI standards that are used in the preparation of diagrams by Tektronix, Inc. are:

Y14.15, 1966	Drafting Practices.
Y14.2, 1973	Line Conventions and Lettering.
Y10.5, 1968	Letter Symbols for Quantities Used in Electrical Science and Electrical Engineering.

American National Standard Institute
1430 Broadway
New York, New York 10018

Component Values

Electrical components shown on the diagrams are in the following units unless noted otherwise:

Capacitors = Values one or greater are in picofarads (pF). Values less than one are in microfarads (μF).
Resistors = Ohms (Ω).

Assembly Numbers and Grid Coordinates

Each assembly in the instrument is assigned an assembly number (e.g., A20). The assembly number appears on the circuit board outline on the diagram, in the title for the circuit board component location illustration, and in the lookup table for the schematic diagram and corresponding component locator illustration. The Replaceable Electrical Parts list is arranged by assemblies in numerical sequence; the components are listed by component number (see following illustration for constructing a component number).

COMPONENT NUMBER EXAMPLE

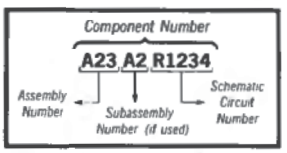

Chassis-mounted components have no Assembly Number prefix—see end of Replaceable Electrical Parts List

The schematic diagram and circuit board component location illustration have grids. A lookup table with the grid coordinates is provided for ease of locating the component. Only the components illustrated on the facing diagram are listed in the lookup table. When more than one schematic diagram is used to illustrate the circuitry on a circuit board, the circuit board illustration may only appear opposite the first diagram on which it was illustrated; the lookup table will list the diagram number of other diagrams that the circuitry of the circuit board appears on.

The following special symbols may eppear on the diagrams:

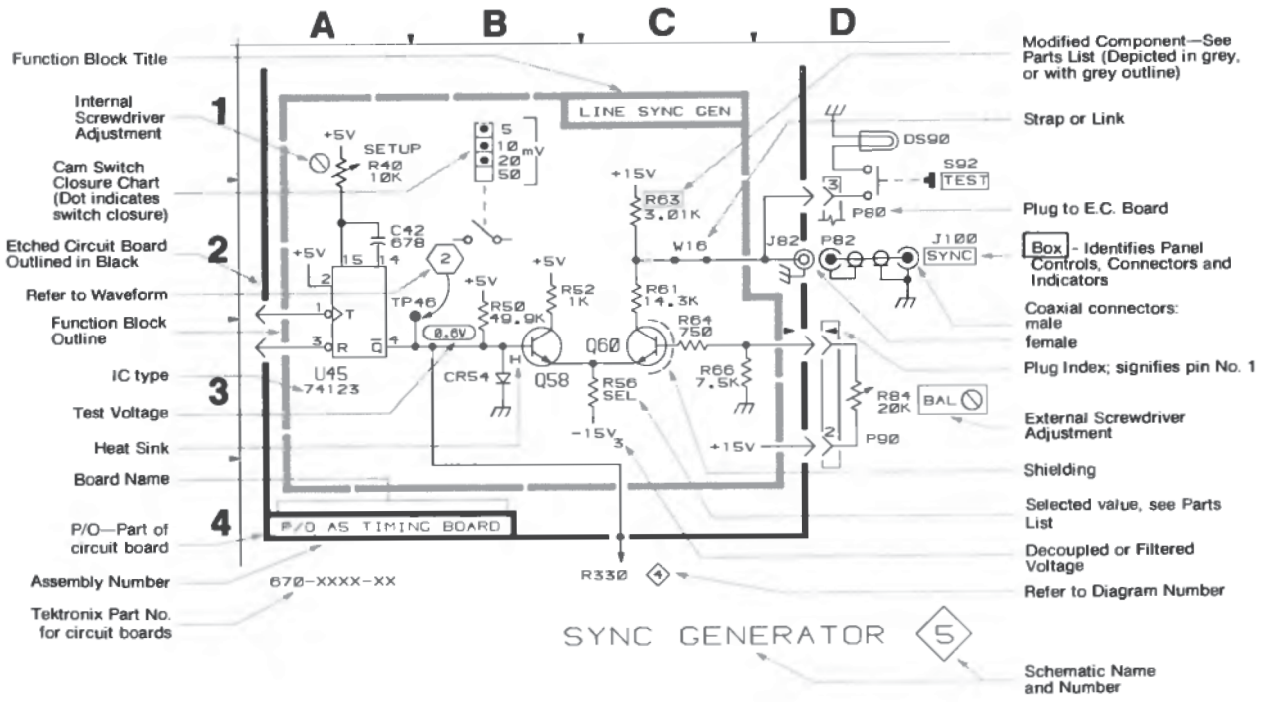

http://manoman.sqhill.com

AC WAVEFORMS

The waveforms adjacent to the circuit diagrams were obtained using the recommended test equipment and setup given below unless otherwise noted.

RECOMMENDED TEST EQUIPMENT

Item	Specifications	Example
Test Oscilloscope	Frequency response: DC-100 MHz. Deflection factor: 5 mV/div to 5 V/div (to 50 V/div with 10X probe). Input impedance: 1 MΩ, 20 pf. Sweep rate: 5 ms to 0.5 μs/div.	TEKTRONIX 465B or equivalent.
Probe	Fast-rise 10X probe compatible with the vertical amplifier of the test oscilloscope.	TEKTRONIX P6065 or equivalent.

465B CONTROL SETTINGS

CRT Controls

INTENSITY	As desired
FOCUS	As desired
SCALE ILLUM	As desired

Vertical Controls (both A and B if applicable)

VOLTS/DIV	5 mV
VAR	Calibrated detent
POSITION	Midrange
AC-GND-DC	DC
VERT MODE	CH 1 and CHOP
INVERT	Off (button out)
20 MHz BW LIMIT	Full bandwidth (button out)

Sweep Controls

TIME/DIV (both)	1 ms
VAR	Calibrated detent
HORIZ DISPLAY	A
X10 MAG	Off (button out)
POSITION	Midrange
DELAY TIME POSITION	Fully counterclockwise

Trigger Controls (both A and B unless otherwise noted)

COUPLING	AC
SOURCE	NORM
TRIG MODE	AUTO
SLOPE	+
A TRIGGER LEVEL	As needed for a stable display (locked on positive transition of square-wave input).
A TRIGGER HOLDOFF	NORM

http://manoman.sqhill.com

TEST OSCILLOSCOPE SETUP

Apply a 20 mV p-p, positive-going square wave from the Calibration Generator to the CH 1 or X input connector. Connect the 465B A +GATE (from the 465B rear panel) to the test oscilloscope external trigger input connector. Use no terminations.

465B Oscilloscope control settings required to obtain valid waveforms are given with each set of waveforms. Changes from the preliminary control settings for the other controls is not required.

Test Oscilloscope Control Settings

All controls as needed for the best display except as noted below:

Vert Mode	Ch 1
Ac-Gnd-Dc	As required for the measurement to be made
Volts/Div	As needed for each waveform
Trigger Source	Ext (465B A +GATE)
Trigger Coupling	Ac
Trigger Mode	Auto
Time/Div	As needed for each waveform

Connect a 10X probe to the Channel 1 input of the test oscilloscope. Apply the probe tip to the test point or component lead as indicated on the schematic and the component board layout Figure associated with that schematic.

DC VOLTAGES

Typical voltage measurements were obtained with the instrument operating under the conditions noted in the control settings adjacent to each schematic diagram. Voltage measurements were taken with no signal applied to the vertical or trigger inputs. All voltages measured with reference to chassis ground. Voltages rounded to the nearest tenth of a volt.

RECOMMENDED TEST EQUIPMENT

Item	Specifications	Example
Digital Multimeter (for voltages up to 1 kV	Range: 0 to 1 kV. Input Impedance: 10 MΩ.	TEKTRONIX DM 501 Digital Multimeter. TEKTRONIX Oscilloscope with DM 44 Option.
DC Voltmeter (for voltages above 1 kV)	Range: 0 to 3 kV. Input Impedance: 20 kΩ/V.	Triplett Model 630NA.

@

http://manoman.sqhill.com

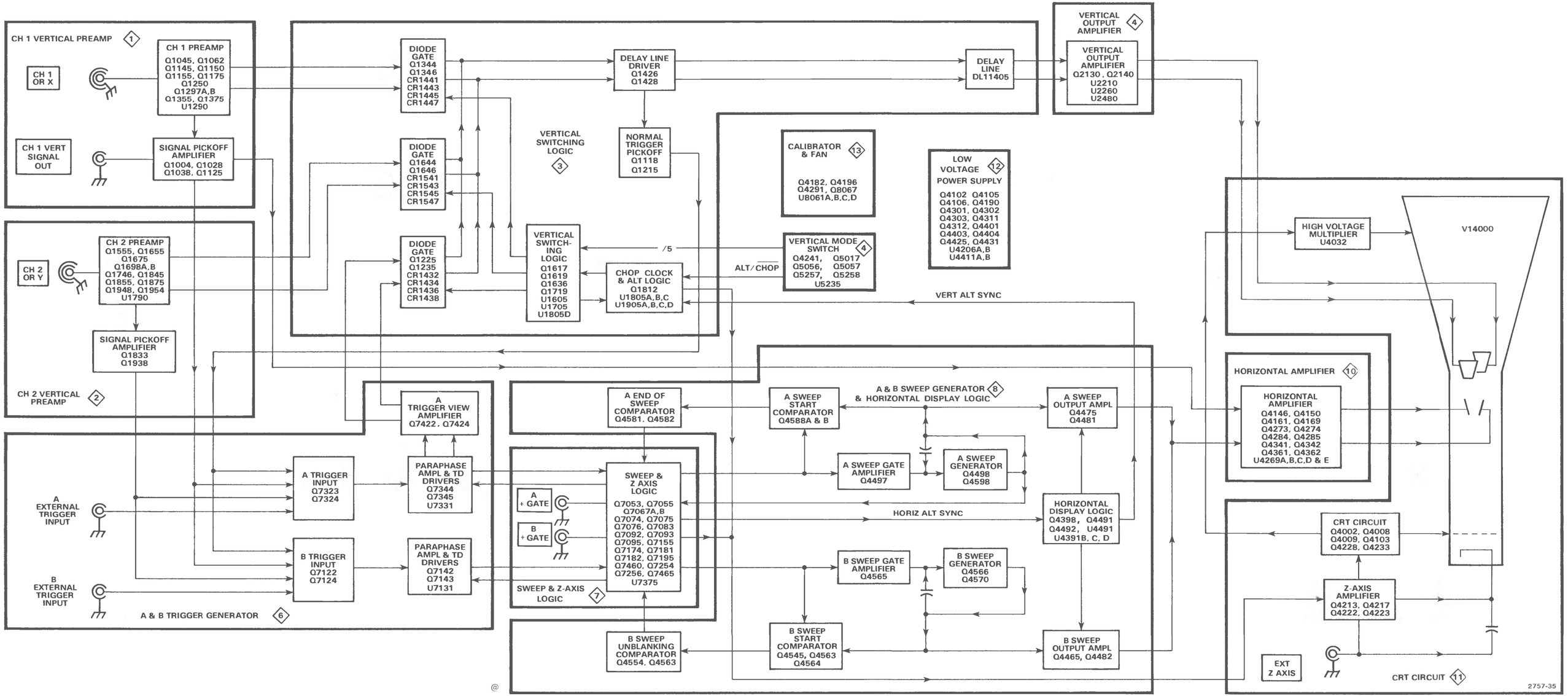

465B BLOCK DIAGRAM

http://manoman.sqhill.com

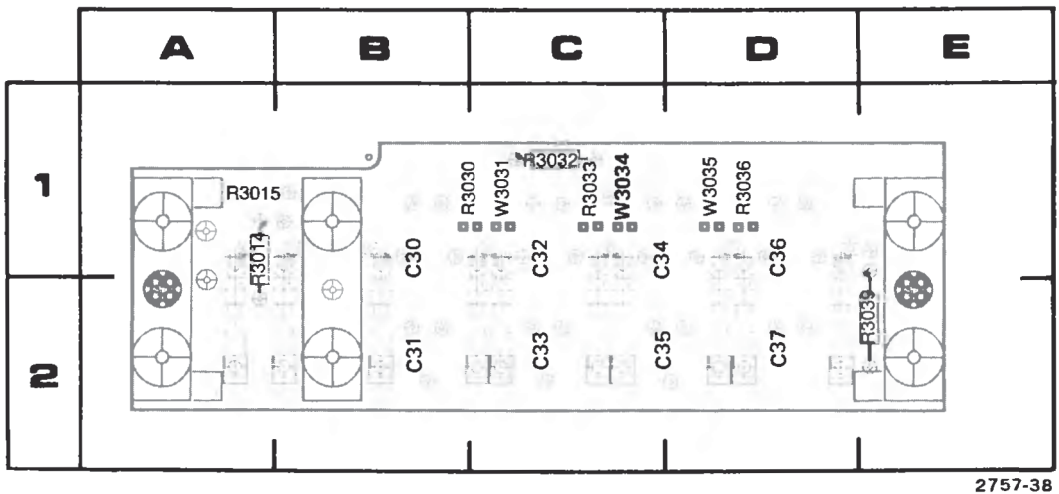

Figure 8-2. A3-Attenuator circuit board.

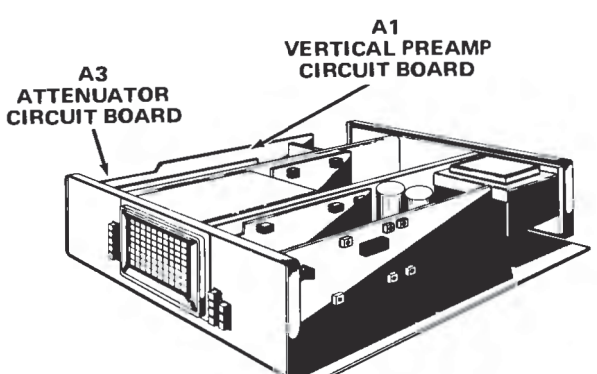

http://manoman.sqhill.com

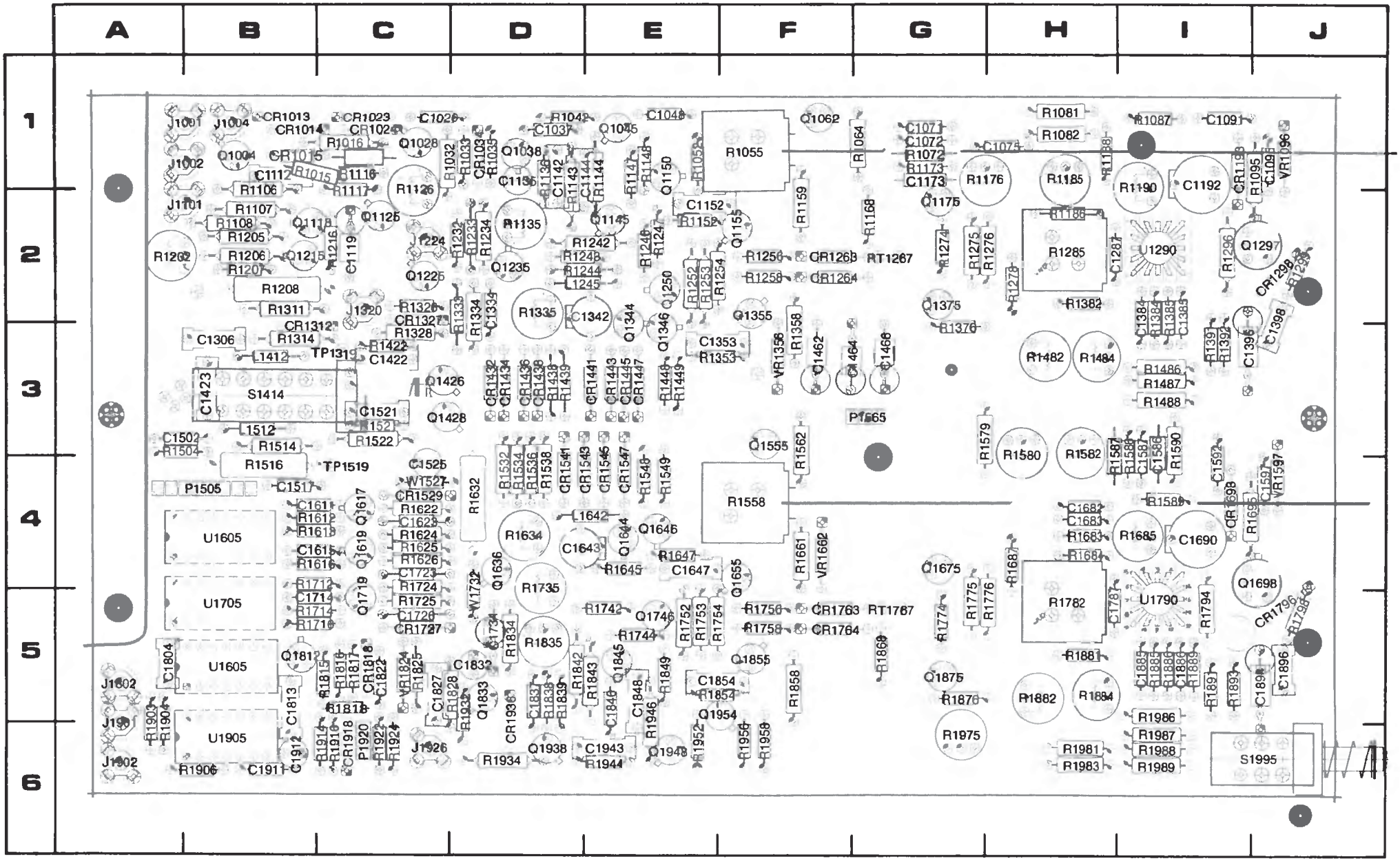

Figure 8-3. A1 Vertical Preamplifier circuit board.

2757-110

http://manoman.sqhill.com

465B CONTROL SETTINGS

DC Voltages

VERT MODE	CH 1
AC-GND-DC (both)	GND

AC Waveforms

VERT MODE	CH 1
CH 1 AC-GND-DC	DC
VOLTS/DIV	5 mV
Input	20 mV positive-going square wave

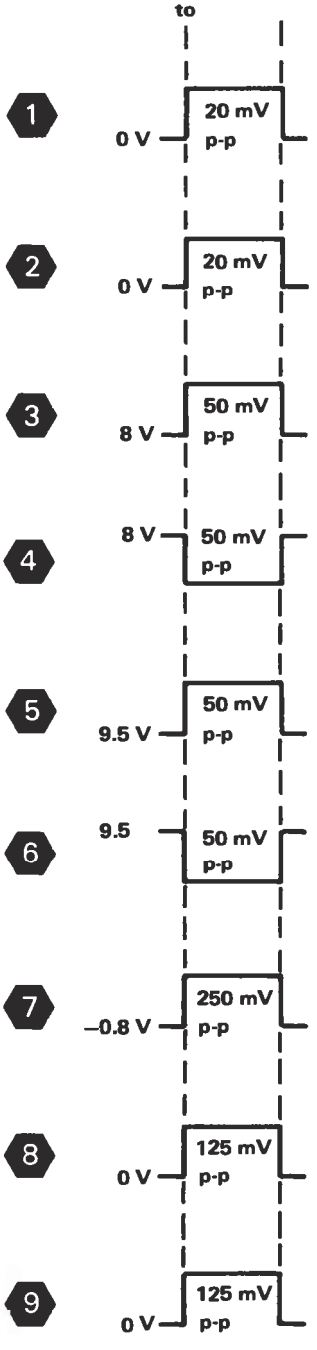

2757-96

http://manoman.sqhill.com

CH 1 VERTICAL PREAMP

DIAGRAM 1

P/O A1 ASSY

CIRCUIT NUMBER	SCHEM LOCATION	BOARD LOCATION
C1016*	8J	1C
C1026	8H	1C
C1037	7G	1D
C1048	4H	1E
C1071	5A	1G
C1072	5A	1G
C1075	5B	1H
C1091	5A	1I
C1095	3A	1J
C1112	7I	1B
C1135	5J	1D
C1142	6H	1D
C1144	5H	1E
C1152	4G	2E
C1173	5A	1G
C1192	5B	1I
C1287	3C	2I
C1335	2D	2D
C1353	6G	3F
C1384	7C	2I
C1385	7B	2I
C1396	4A	3I
C1398	4A	2J
CR1013	8I	1B
CR1014	8I	1B
CR1015	7I	1B
CR1023	8I	1C
CR1024	8I	1C
CR1034	7H	1D
CR1193	4B	1I
CR1263	4F	2F
CR1264	6F	2F
CR1298	3A	2J
J1001	8J	1B
J1002	7J	1B
J1004	7J	1B
Q1004	7I	1B
Q1028	8H	1C
Q1038	6H	1D
Q1045	4H	1E
Q1062	5I	1F
Q1125	7H	2C
Q1145	6H	2E
Q1150	5G	1E
Q1155	4F	2F
Q1175	4D	2G
Q1250	5G	2E
Q1297A	4A	2J
Q1297D	4A	2J
Q1355	6F	2F
Q1375	6D	2G
R1015	6I	1B
R1016	8J	1C
R1032	8H	1D
R1033	8H	1D
R1035	7H	1D
R1042	4H	1D
R1052	5G	1E
R1055	5I	1F
R1064	5I	1G
R1072	5A	1G
R1081	5A	1H
R1082	5A	1H
R1087	5B	1I
R1095	4A	1J
R1106	7I	2B
R1116	8H	1C
R1117	7H	2C
R1126	9G	2C
R1135	5J	2D
R1136	6H	1D
R1143	5H	1D
R1144	5H	1E
R1147	4G	1E
R1148	4G	1E
R1152	4G	2E
R1159	4E	2F
R1168	6F	2G
R1173	5A	1G
R1176	5A	1H
R1185	5B	1H
R1186	4D	2H
R1188	5B	1H
R1190	5B	1I
R1234	7H	2D
R1242	5H	2E
R1243	4J	2D
R1244	6J	2E
R1246	6G	2E
R1247	6G	2E
R1252	5G	2E
R1253	5G	2E
R1254	5G	2F
R1256	4F	2F
R1258	6F	2F
R1274	4D	2G
R1275	5D	2G
R1276	5D	2H
R1278	3C	2H
R1285	7A	2H
R1296	4A	2I
R1299	4A	2J
R1353	6G	3F
R1358	6E	3F
R1376	6E	3G
R1382	6D	2H
R1384	7C	2I
R1385	7B	2I
R1391	6B	3I
R1392	6B	3I
R1482	5D	3H
R1484	6A	3H
R1486	7C	3I
R1487	7B	3I
R1488	7B	3I
RT1267	4E	2G
U1290	3D	2I
VR1096	3A	1J
VR1356	5E	3F

P/O A1 ASSY also shown on diagram(s) 2, and 3

***See Parts List for serial number ranges.**

P/O A3 ASSY

CIRCUIT NUMBER	SCHEM LOCATION	BOARD LOCATION
C30	2C	1B
C31	2C	2B
C32	2E	1C
C33	2E	2C
C34	2G	1C
C35	2G	2C
C36	2H	1D
C37	2I	2D
R3014	1B	1A
R3015	2B	1A
R3030	2C	1C
R3032	2E	1C
R3033	2E	1C
R3036	2H	1D
R3039	2I	2E
W3031	2D	1C
W3034	2F	1C
W3035	2G	1D

P/O A3 ASSY also shown on diagram 2

CHASSIS MOUNTED PARTS

CIRCUIT NUMBER	SCHEM LOCATION	BOARD LOCATION
C3042	2J	CHASSIS
C13010	2A	CHASSIS
C13012	2A	CHASSIS
J13010	2A	CHASSIS
R3042	2J	CHASSIS
R3045	2J	CHASSIS

http://manoman.sqhill.com

VOLTAGE & WAVEFORM CONDITIONS

S30B VOLTS/DIV (SHOWN IN 5mV POSITION)

(SHOWN IN AC POSITION) S30A

AC GND DC

1X: 5 10 20 50 mV .1 .2 .5 V 1 2 5

10X: 50 mV 1 2 5 10 20 50

J13010 CH1 IM 20pF

CH1 TO R1502 2A 4

C13012 .019

R13010 75

C13010 0.25-1.5

R3014 1M

R3015 22

100X ATTEN C30,C31

R3030 SEL

10X ATTEN C32,C33

R3032 SEL

R3033 SEL

4X ATTEN C34,C35

2X ATTEN C36,C37

W3031 W3034 W3035

R3036 SEL

R3039 1M

C3042 .001

R3042 470K

R3045 30

CH1 VERT SIG TO Q1297A 4A THIS PAGE

NOTE: DOT INDICATES SWITCH CLOSED (B CONTACT WHEN TWO ARE PRESENT)

A3 VERTICAL ATTENUATOR BOARD

Q1297 TOP VIEW

CH1 VERT SIG FROM R3045 2K THIS PAGE

R1299 SEL 0V

C1398 SEL

R1296 20

Q1297A Q1297B

5mV/DIV CR1193

R1095 20

C1396 6.8µF

R1081 2.37K

C1071 .047

R1087 47

C1072 150

C1075 .01

R1072 1.1K

C1192 4-65

R1173 240

R1185 5K

C1173 1500

R1190 100

C1091 .01

R1082 2.37K

R1176 5K

R1188 47

CH1 VAR BAL

R1484 10K

R1392 10K

R1391 150

VAR

R1285 5K

R1488 7.5K

GANGED WITH S1285 4

U1290

R1278 27

C1287 .027

R1186 47

Q1175

Q1375

R1382 47

R1385 100

R1384 100

C1385 .027

C1384 .027

R1487 3.01K

R1486 15.4K

R1274 300

R1159 200

R1376 300

R1358 200

R1482 2.5K GAIN

R1275 750

R1276 750

VR1356 6.2V

RT1267 100K

CR1263

R1256 10

CR1264

R1258 10

R1168 18K

Q1155

Q1150

Q1250

Q1355

C1152 200

R1152 240

R1253 576

R1254 82.5

R1252 576

R1052 100

C1353 200

R1353 240

R1114B 2.2K

R1147 39

R1247 2.2K

R1246 39

C1142 470

R1136 330

R1042 430

C1048 .001

Q1045

R1143 976

R1144 200

R1242 976

C1144 33

Q1145

R1055 1K

CH1 POSITION Q1062

R1064 931

R1135 20K

CH1 POSITION CENTER

C1135 6.8µF

R1243 3.9K

R1244 3.9K

CH1 + VERT SIG TO Q1344 1E 3

CH1 - VERT SIG TO Q1346 1E 3

Q1038

C1037 .027

R1035 47

R1234 1.07K

CR1034

Q1125

R1117 330

CR1015

C1112 51

R1106 45.3

Q1004

R1015 4.7K

J1004 CH1 X AXIS SIG TO J4385 2A 3

J1002 CH1 TRIG SIG TO J7206 1A 6

≈25mV/DIV

R1116 750

Q1028

C1026 .027

R1032 1.30K

R1033 330

CH1 TRIG DC BAL R1126 500

CR1014 CR1024 CR1023 CR1013

R1016 45.3

C1016 47

J1001 CH1 VERT SIGNAL OUT

SEE PARTS LIST FOR EARLIER VALUES AND SERIAL NUMBER RANGES OF PARTS OUTLINED OR DEPICTED IN GREY.

NUMERAL AND LETTER AT SIGNAL LINES TO OR FROM OTHER DIAGRAMS INDICATES THE GRID COORDINATE ON ANOTHER SCHEMATIC (FOR EXAMPLE: 4E)

Static Sensitive Devices See Maintenance Section

SEE PARTS LIST FOR SEMICONDUCTOR TYPES.

PARTIAL A1 PREAMP BOARD

COMPONENT NUMBER EXAMPLE

Component Number: A23 A2 R1234

Assembly Number — Subassembly Number (if used) — Schematic Circuit Number

Chassis-mounted components have no Assembly Number prefix—see end of Replaceable Electrical Parts List.

http://manoman.sqmil.com

465B CONTROL SETTINGS

DC Voltages

VERT MODE	CH 2
AC-GND-DC (both)	GND

AC Waveforms

VERT MODE	CH 2
CH 2 AC-GND-DC	DC
VOLTS/DIV	5 mV
Input	20 mV positive-going square wave

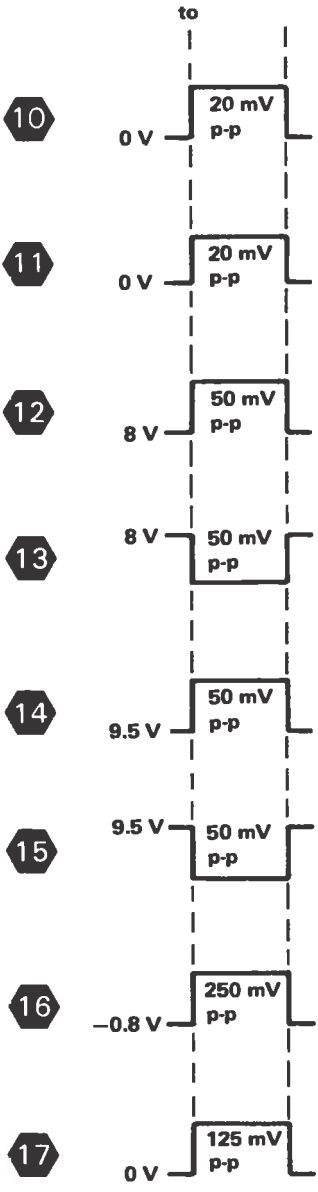

2757-97

http://manoman.sqhill.com

CH 2 VERTICAL PREAMP

DIAGRAM 2

P/O A1 ASSY

CIRCUIT NUMBER	SCHEM LOCATION	BOARD LOCATION
C1586	5A	3I
C15B7	5A	3I
C1592	5A	4I
C1597	3A	4J
C1647	3G	4E
C16B2	5B	4H
C16B3	5A	4H
C1690	5B	4I
C17B7	3C	5H
C1B27	7I	5C
C1837	7G	5O
C1846	4H	5E
C184B	5H	5E
C1854	6G	5F
C18B5	7C	5I
C1BB6	7B	5I
C1B94	4A	5J
C1B96	4A	5J
C1943	6H	6E
CR1693	4B	4I
CR1763	4F	5F
CR1764	6F	5F
CR1796	3A	5J
CR1936	7H	5D
J1926	7J	6C
Q1555	5I	3F
Q1556	4F	4F
Q1675	4D	4G
Q1698A	4A	4J
Q169BB	4A	4J
Q1746	4G	5E
Q1833	BI	5D
Q1845	4H	5E
Q1B55	6F	5F
Q1B75	6D	5G
Q193B	6H	6D
Q1948	6H	6E
Q1954	6G	5F
R155B	5I	4F
R1562	5I	3F
R1579	5A	3H
R1580	5A	3H
R15B2	5B	3H
R15B6	5A	3I
R15B7	5A	3H
R15B9	5B	4I
R1590	5A	3I
R1645	4J	4E
R1647	4G	4E
R1661	4E	4F
R16B3	5B	4H
R1684	4D	4H
R16B5	5B	4I
R16B7	3C	4H
R1695	4A	4J
R1735	5J	4D
R1742	6J	5E
R1744	4H	5E
R1752	5G	5E
R1753	5G	5E
R1754	5F	5F
R1756	4F	5F
R175B	6F	5F
R1774	4E	5G
R1775	5D	5G
R1776	5D	5H
R17B2	7A	5H
R1794	4A	5I
R179B	4A	5J
R1B2B	7I	5D
R1B34	BH	5D
R1B35	8H	5D
R1B38	7H	5D
R1B39	4H	5O
R1842	5H	5D
R1843	5H	5E
R1849	4G	5E
R1B54	6G	5F
R1B5B	6E	5F
R1B6B	6F	5G
R1B76	6E	5G
R18B1	6D	5H
R1BB2	5E	5H
R1BB4	6A	5H
R1BB5	7C	5I
R18B6	7B	5I
R1BB9	6B	5I
R1891	6B	5I
R1B93	6A	5I
R1932	7H	5D
R1934	7H	6D
R1944	6H	6E
R1946	5H	5E
R1952	5G	6E
R1956	6H	6F
R195B	6G	6F
R1975	6A	6G
R19B1	7B	6H
R19B3	7C	6H
R19B6	7B	5I
R1987	7B	6I
R1988	7B	6I
R19B9	7A	6I
RT1767	4F	5G
S1995	6A	6J
U1790	3B	5I
VR1597	3A	4J
VR1662	5E	4F

P/O A1 ASSY also shown on diagram(s) 1, and 3

P/O A3 ASSY

CIRCUIT NUMBER	SCHEM LOCATION	BOARD LOCATION
C30	2C	1B
C31	2C	2B
C32	2E	1C
C33	2E	2C
C34	2G	1C
C35	2G	2C
C36	2H	1D
C37	2I	2D
R3014	1B	1A
R3015	2B	1A
R3030	2C	1C
R3032	2E	1C
R3033	2E	1C
R3036	2H	1D
R3039	2I	2E
W3031	2O	1C
W3034	2F	1C
W3035	2G	1D

P/O A3 ASSY also shown on diagram 1

CHASSIS MOUNTED PARTS

CIRCUIT NUMBER	SCHEM LOCATION	BOARD LOCATION
C3042	2J	CHASSIS
C13010	2A	CHASSIS
C13012	2A	CHASSIS
J13010	2A	CHASSIS
R3042	2J	CHASSIS
R3045	2K	CHASSIS

http://manoman.sqhill.com

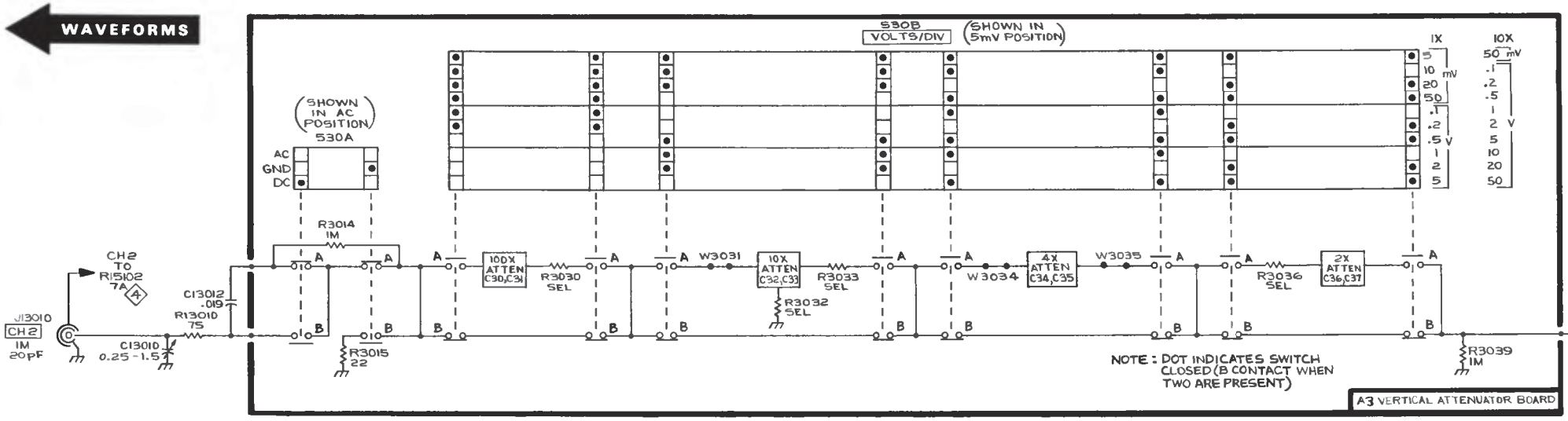

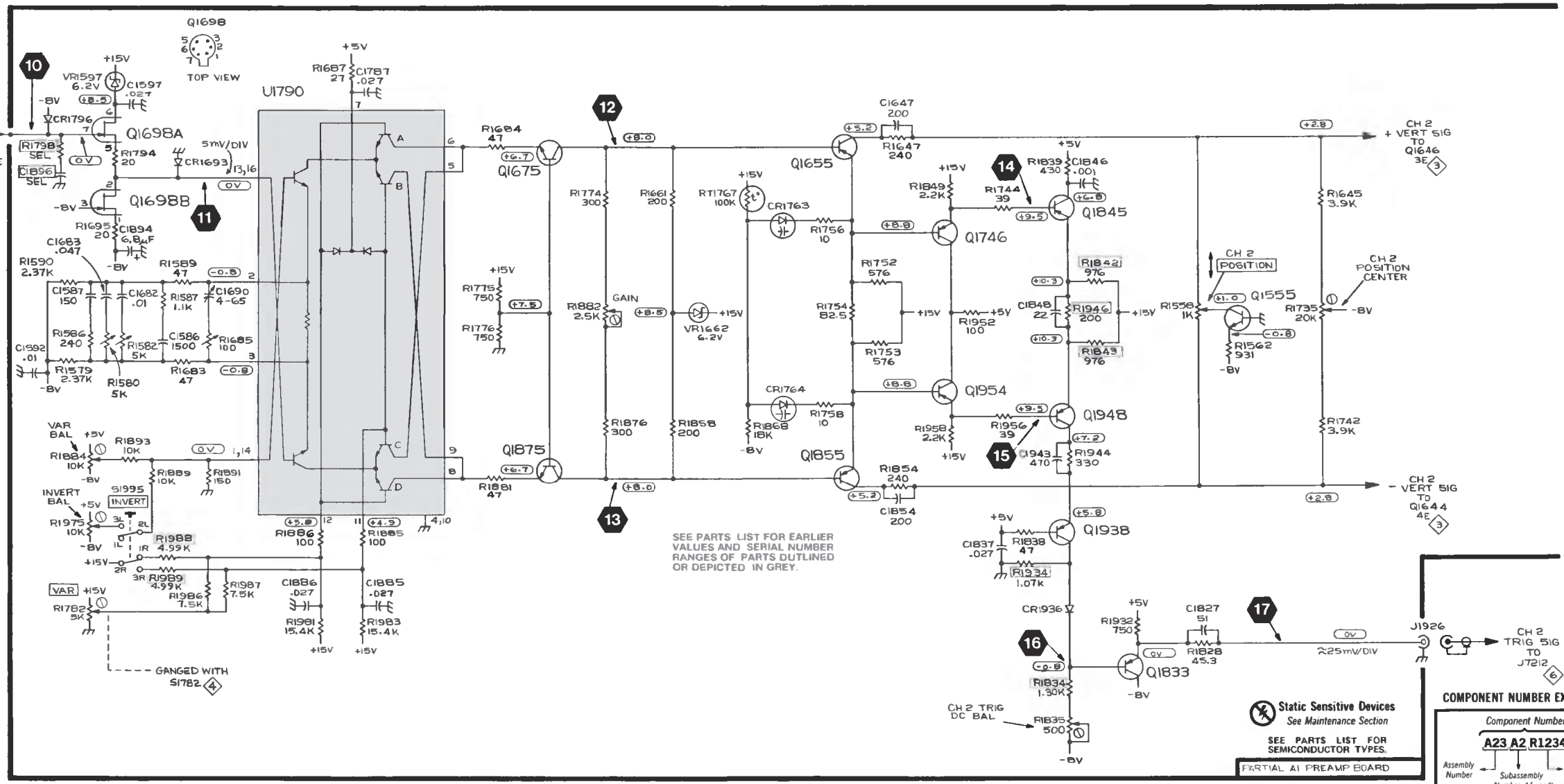

COMPONENT NUMBER EXAMPLE

Component Number: A23 A2 R1234
- A23 — Assembly Number
- A2 — Subassembly Number (if used)
- R1234 — Schematic Circuit Number

Chassis-mounted components have no Assembly Number prefix—see end of Replaceable Electrical Parts List

NUMERAL AND LETTER AT SIGNAL LINES TO OR FROM OTHER DIAGRAMS INDICATES THE GRID COORDINATE ON ANOTHER SCHEMATIC (FOR EXAMPLE: 4E)

http://manoman.sqhill.com

465B CONTROL SETTINGS

DC Voltages

A TRIG MODE	NORM (sweep not running)
VERT MODE	CH 1 and CHOP
AC-GND-DC (both)	GND
CH 1 POSITION	Midrange

AC Waveforms

VERT MODE	CH 1, ADD, A TRIG VIEW, and CHOP
A TRIG MODE	AUTO (no trigger signal)
A AND B TIME/DIV	1 ms
HORIZ DISPLAY	A
AC-GND-DC (both)	GND

H = HI logic level >2 vdc
L = LO logic level <0.8 vdc

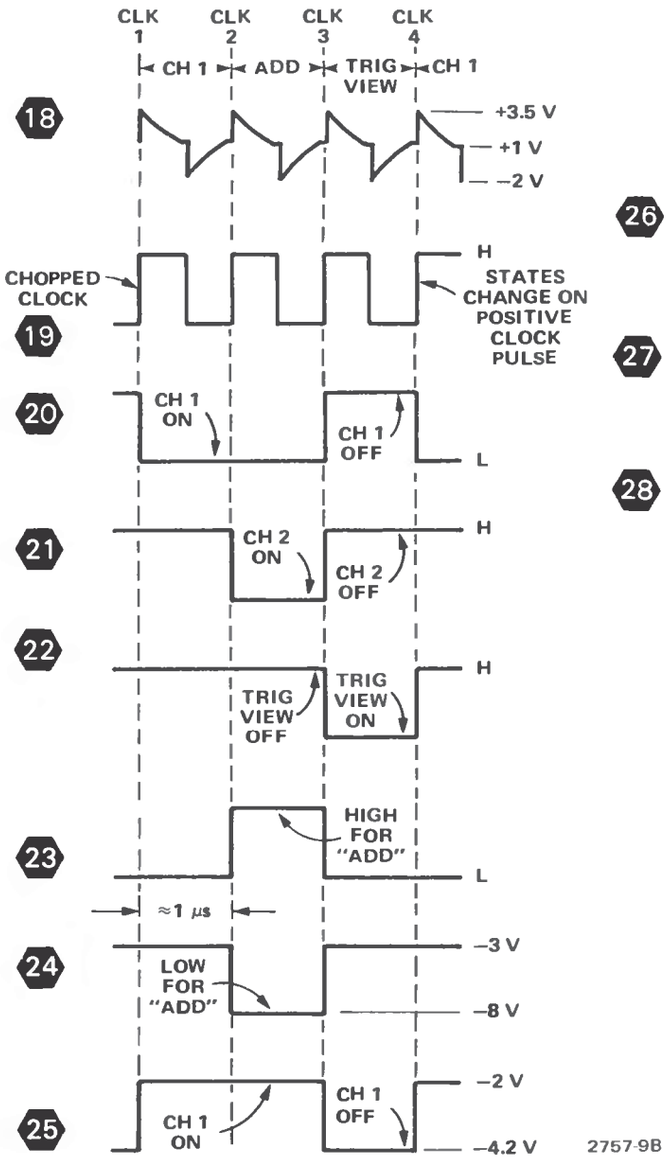

2757-98

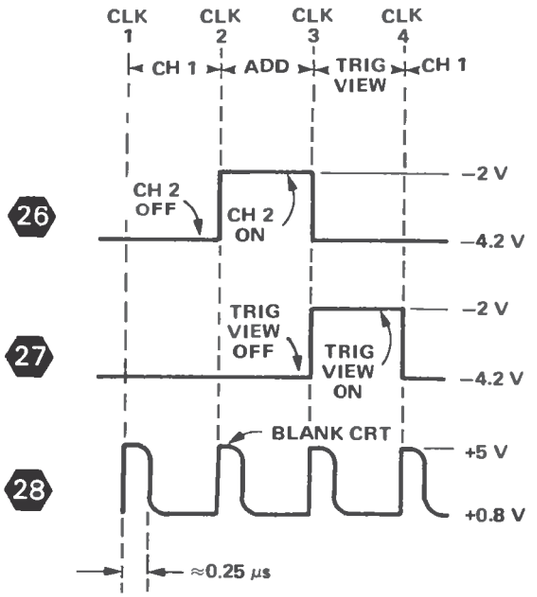

465B CONTROL SETTINGS

AC Waveforms

VERT MODE	CH 1
VOLTS/DIV	5 mV
CH 1 AC-GND-DC	DC
Vertical POSITION	Midrange
Input	20 mV positive-going square wave

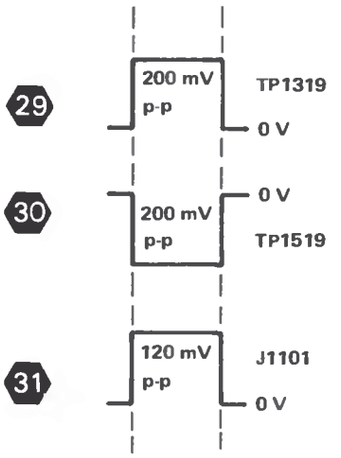

2757-99

http://manoman.sqhill.com

VERTICAL SWITCHING LOGIC
DIAGRAM 3

P/O A4 ASSY

CIRCUIT NUMBER	SCHEM LOCATION	BOARD LOCATION	CIRCUIT NUMBER	SCHEM LOCATION	BOARD LOCATION	CIRCUIT NUMBER	SCHEM LOCATION	BOARD LOCATION
P4061	6A	2H						

P/O A4 ASSY also shown on diagram(s) 4, 5, 7, 8, 9, 10, 11, 12, and 13

P/O A5 ASSY

CIRCUIT NUMBER	SCHEM LOCATION	BOARD LOCATION	CIRCUIT NUMBER	SCHEM LOCATION	BOARD LOCATION	CIRCUIT NUMBER	SCHEM LOCATION	BOARD LOCATION
C5018	2B	1B	P5001 P5005	2B 2A	1A 1B	S5210	3B	3A

P/O A5 ASSY also shown on diagram 4

P/O A7 ASSY

CIRCUIT NUMBER	SCHEM LOCATION	BOARD LOCATION	CIRCUIT NUMBER	SCHEM LOCATION	BOARD LOCATION	CIRCUIT NUMBER	SCHEM LOCATION	BOARD LOCATION
C710B	2A	2B	P7052	3A	1G	S7312B	1A	3C

P/O A7 ASSY also shown on diagram(s) 6, 7, and 12

CHASSIS MOUNTED PARTS

CIRCUIT NUMBER	SCHEM LOCATION	BOARD LOCATION	CIRCUIT NUMBER	SCHEM LOCATION	BOARD LOCATION	CIRCUIT NUMBER	SCHEM LOCATION	BOARD LOCATION
DL11405	1M	CHASSIS						

http://manoman.sqhill.com

VERTICAL SWITCHING LOGIC

DIAGRAM 3

P/O A1 ASSY

CIRCUIT NUMBER	SCHEM LOCATION	BOARD LOCATION
C1119	1L	2C
C1306	2L	3B
C1342	1D	2E
C1405	2L	3B
C1422	1K	3C
C1462	7A	3F
C1464	7A	3G
C1466	6A	3G
C1502	4L	3B
C1517	2D	4B
C1521	3K	3C
C1525	7B	4C
C1611	6H	4C
C1615	5H	4C
C1623	6J	4C
C1643	4D	4E
C1714	5H	5C
C1723	5J	4C
C1726	5J	5C
C1734	7B	5D
C1B04	BF	5A
C1B13	BH	5B
C1B22	5H	5C
C1B32	2K	5D
C1911	BC	6B
C1912	7I	6B
CR1312	1K	3B
CR1327	2D	2C
CR1432	2F	3D
CR1434	3F	3D
CR1436	3G	3D
CR143B	2G	3D
CR1441	1G	3E
CR1443	1F	3E
CR1445	1G	3E
CR1447	1F	3E
CR1529	6K	4C
CR1541	4G	4D
CR1543	4F	4E
CR1545	3G	4E
CR1547	3G	4E
CR1547	3F	4E
CR1727	6K	5C
CR1B1B	6K	5C
CR191B	8I	6C
J1101	1M	2B
J1224	1B	2C
J1224	1B	2C
J1320	3C	2C
J1B02	6M	5A
J1B02	6M	5A
J1901	BB	6A
J1902	BM	6A
L1245	1D	2E
L1412	1M	3B
L1512	3L	3B
L1642	3D	4E
P1505	2B	4B
P1505	4A	4B
P1505	4M	4B
P1505	8A	4B
P1565	6A	3G
P1920	5M	6C
P1920	BM	6C
Q111B	1K	2B
Q1215	1K	2B
Q1225	3E	2C
Q1235	2E	2D
Q1344	1E	2E
Q1346	1E	3E
Q1426	2K	3C
Q1428	3K	3C
Q1617	6I	4C
Q1619	5I	4C
Q1636	4I	4D
Q1644	4E	4E
Q1646	3E	4E
Q1719	5I	5C
Q1B12	BI	5B
R1107	1L	2B
R110B	1K	2B
R1202	1K	2A
R1205	1K	2B
R1206	1K	2B
R1207	1K	2B
R1208	1K	2B
R1216	1L	2C
R1232	1D	2D
R1233	2E	2D
R1311	1K	2B
R1314	1L	3B
R1326	3D	2C
R132B	1J	3C
R1333	2E	2D
R1334	2D	2D
R1335	1D	2D
R1422	1K	3C
R143B	2F	3D
R1439	3F	3D
R1448	1E	3E
R1449	1E	3E
R1504	4M	3B
R1514	3L	3B
R1516	3K	4B
R1521	3K	3C
R1522	3J	3C
R1532	2J	4D
R1534	3J	4D
R1536	2K	4D
R153B	2K	4D
R154B	3E	4E
R1549	4E	4E
R1612	6H	4C
R1613	6I	4C
R1616	5H	4C
R1622	6I	4C
R1624	6J	4C
R1625	5I	4C
R1626	5J	4C
R1632	2K	4D
R1634	4D	4D
R1712	5H	4C
R1714	5H	5C
R1716	5I	5C
R1724	5J	4C
R1725	5I	5C
R1815	BI	5C
R1B16	6L	5C
R1817	6K	5C
R1818*	8J	5C
R1825	4I	5C
R1903	7E	6A
R1904	7F	6A
R1906	8I	6B
R1914	8J	6C
R1916	7H	6C
R1922	4H	6C
R1924	4H	6C
S1414	1M	3B
TP1319	1K	3C
TP1519	3K	4C
U1605	6C	4B
U1705	4G	5B
U1B05A	7F	5B
U1B05B	7D	5B
U1805C	7F	5B
U1B05D	4H	5B
U1905A	BD	6B
U1905B	BE	6B
U1905C	BG	6B
U1905D	BD	6B
VR1B24	4H	5C
W1527	7A	4C
W1732	7A	4D

P/O A1 ASSY also shown on diagram(s) 1, and 2

***See Parts List for serial number ranges.**

http://manoman.sqhifi.com

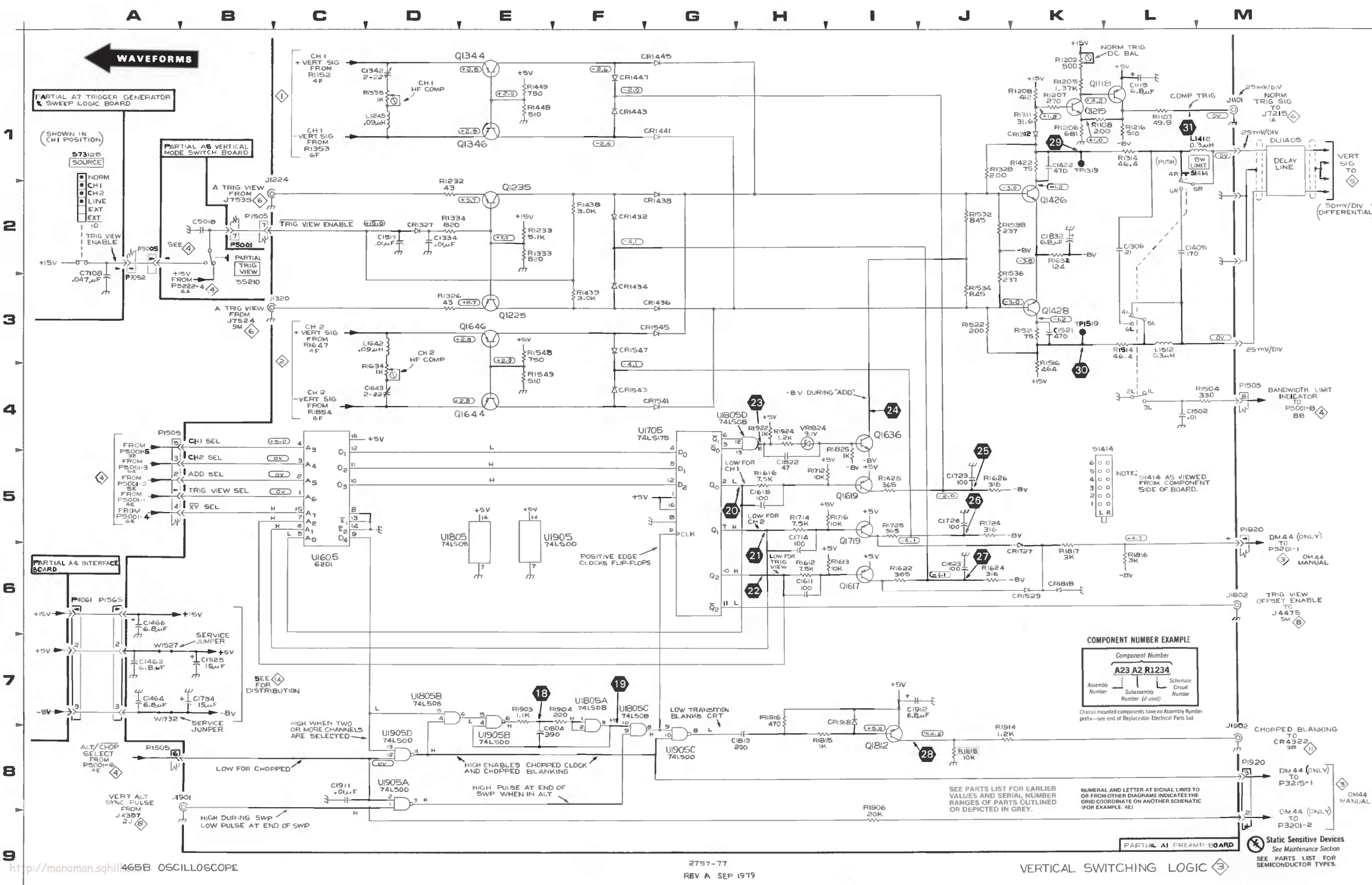

http://manoman.sqhill.com

A5
VERTICAL
MODE SWITCH
CIRCUIT
BOARD

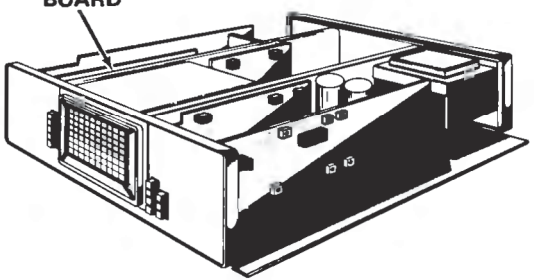

REV A JUN 1979

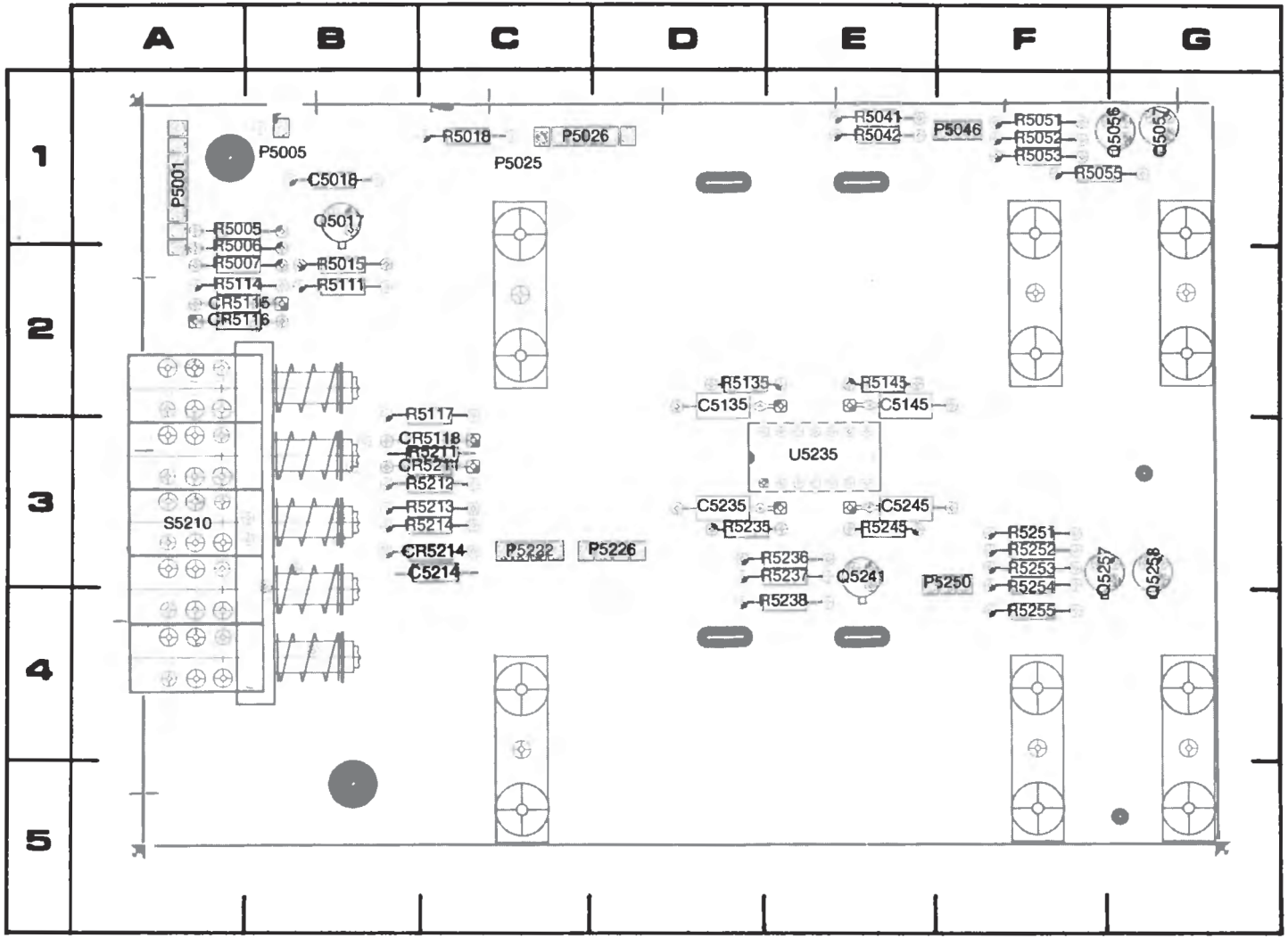

Figure 8-4. A5-Vertical Mode Switch circuit board.

2757-39

http://manoman.sqhill.com

VERTICAL OUTPUT AMPLIFIER

DIAGRAM 5

(SN B030000 & UP)

A2 ASSY

CIRCUIT NUMBER	SCHEM LOCATION	BOARD LOCATION
C203B	3C	1D
C2047	4G	1D
C2126	3H	1C
C2172	3H	1F
C2196	2H	2H
C2315	2E	2C
C2334	5C	3D
C2335	7C	3D
C2336	6C	3D
C2337	6C	2D
C2339	6B	3D
C2346	6D	2E
C2417	4B	3C
C2422	3D	3C
C2424	3D	3C
C2486	3H	3G
C2488	2G	3G
L2296	2G	2H
L2492	2G	3H
L2494	3G	3H
LR2264	5H	2F
LR2267	6H	2F
P2495	4B	
P249B	3B	3H
Q2105	3C	2B
Q2115	4B	1B
Q2306	2B	2B
Q2308	3C	2B
R2014	2B	1B
R2015	2B	1B
R2016	2A	1B
R2017	3A	1B
R2025	5F	1C
R2045	3C	1D
R2054	6E	1E
R2055	6E	1E
R2057	6E	1E
R205B	5F	1E
R2073	6F	1F
R2074	2H	1F
R2075	6F	1F
R2103	3C	1B
R2104	3B	1B
R210B	3C	1B
R2117	3A	1B
R2119	3C	2B
R2123	4G	1C
R2124	4G	1C
R2125	4F	1C
R2127	3H	1C
R2135	5B	1C
R2137	7B	1D
R2142	5C	1D
R2143	5C	1D
R2154	5F	1E
R2156	5E	2E
R2168	5H	2F
R2185	5H	2G
R2207	3B	2B
R2208	3C	2B
R2212	2C	2B
R2214	3D	2B
R221B	2C	2B
R2243	6D	2D
R2244	5C	2D
R2246	7C	2D
R2247	6D	2E
R2262	5H	2F
R226B	7H	2F
R22B4	7H	2G
R2304	2B	2B
R2305	2C	2B
R231B	2D	3C
R2323	2E	2C
R2325	3E	2C
R2326	3D	3C
R2328	2D	3C
R2335	7C	3D
R2337	7C	3D
R2344	5C	3D
R2354	6C	2E
R2356	6E	2E
R2357	6F	2E
R2358	6F	3E
R2426	2D	3C
R2432	6C	3C
R2436	6C	3D
R2446	6C	3D
R2447	6B	3E
R244B	6B	3E
R2455	6B	3E
R2465	6F	3F
R2466	6F	3F
R2472	6G	3F
R2476	4C	3F
RT2333	3E	2C
U2005	3B	1B
U2225	4F	2C
U2255	5G	2E
U2385	6F	3G
VR2232	5C	2D
VR2234	4D	2D
VR223B	7C	2D

P/O A4 ASSY

CIRCUIT NUMBER	SCHEM LOCATION	BOARD LOCATION
P4058	2G	2G
S4075	2J	2F

P/O A4 ASSY also shown on diagrams 3, 4, 7, 8, 9, 10,11, 12, and 13

http://manoman.sqhill.com

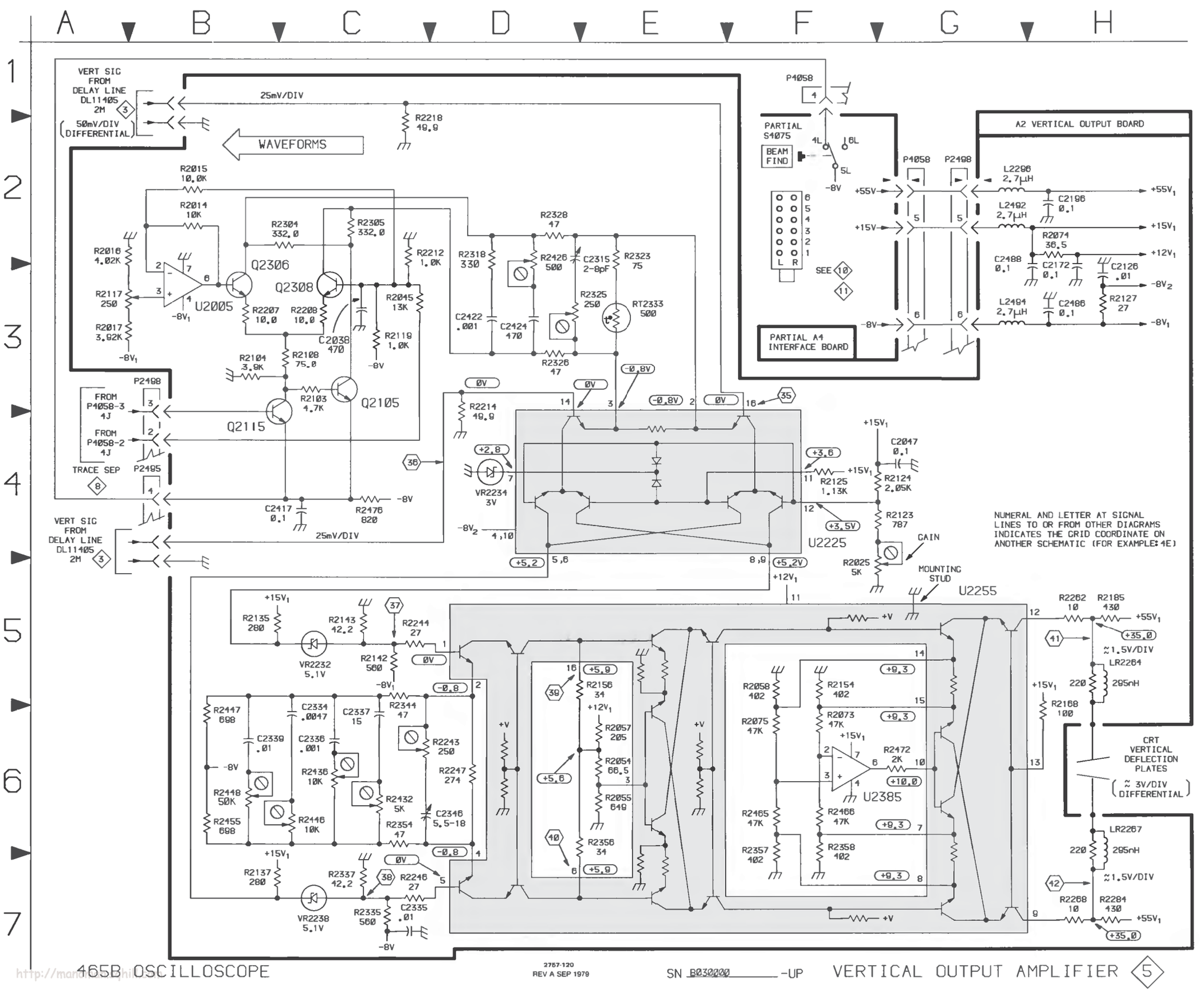

465B OSCILLOSCOPE

2757-120
REV A SEP 1979

SN B030000 -UP

VERTICAL OUTPUT AMPLIFIER 5

http://manuals.hoshi.com

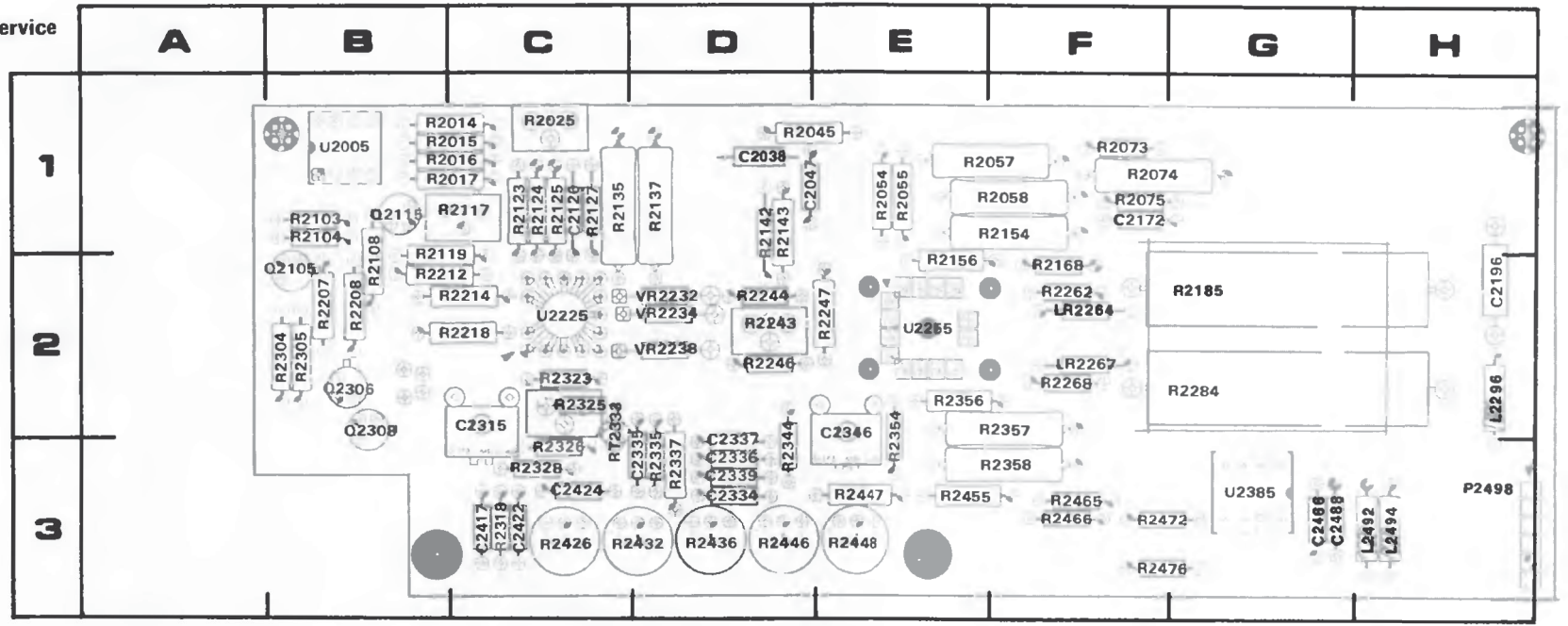

Figure 8-5A. A2 Vertical Output circuit board (SN B030000 & up).

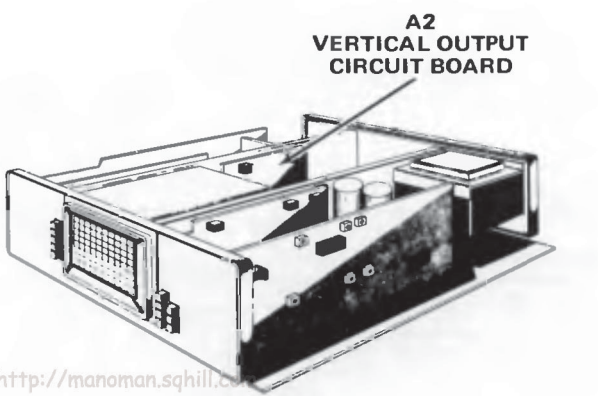

http://manoman.sqhill.com

465B CONTROL SETTINGS

DC Voltages

VERT MODE	CH 1
Vertical POSITION	Midrange
AC-GND-DC (both)	GND

AC Waveforms

VERT MODE	CH 1
VOLTS/DIV	5 mV
CH 1 AC-GND-DC	DC
Input	20 mV positive-going square wave

REV A SEI

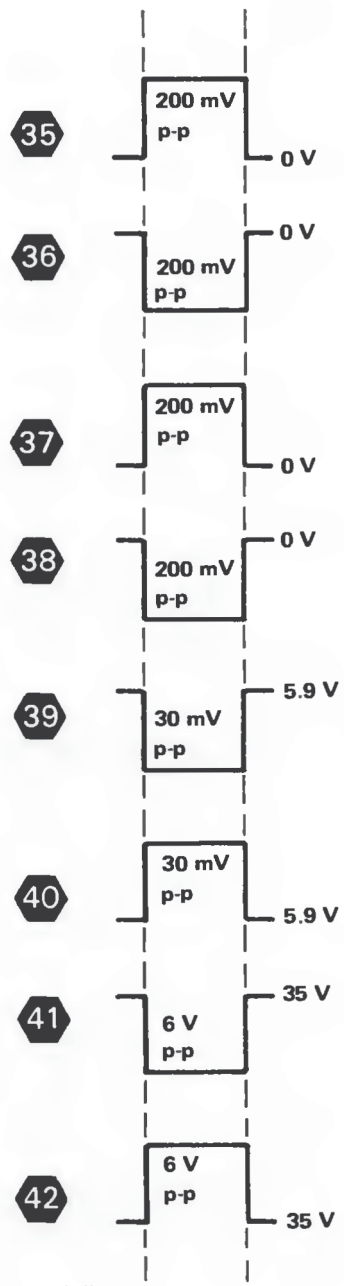

http://manoman.sqhill.com

2757-101

VERTICAL OUTPUT AMPLIFIER

DIAGRAM 5

(BELOW SN B030000)

A2 ASSY

CIRCUIT NUMBER	SCHEM LOCATION	BOARD LOCATION
C2016	2E	1B
C2112	6C	1B
C2133	6C	1C
C2174	6C	1F
C2293	5C	2H
C2308	4D	3B
C233B	3G	3D
C2350	4H	2D
C2412	4C	3B
C2415	4C	3B
C2421	4C	3C
C242B	5G	3C
C2426	5G	3C
C2436	4G	3D
C243B	4F	3D
C2439	3G	3D
C24B1	6C	3G
C24B3	6C	3G
L2393	5C	2H
L2419	5C	3C
L24B5	6C	3G
L24B7	6C	3G
LR226B	3M	2E
LR2366	5M	2E
P2495	4B	3H
Q2130	7G	1C
Q2140	7F	1D
R2005	2E	1B
R2005	2F	1B
R2025	7E	1C
R2029	6F	1C
R2030	6G	1C
R2035	6F	1C
R2063	4I	1E
R2073	4K	1F
R2073	4K	1F
R2105	2E	1B
R2106	2E	1B
R2107	2E	1B
R2113	6C	1B
R2115	3F	1B
R2134	3G	1C
R2136	6F	1C
R213B	3G	1D
R2144	7G	1D
R2146	7E	1D
R2151	7G	1D
R2153	4I	1D
R2155	4I	1D
R2164	3K	1E
R2165	3K	1E
R2166	3I	1E
R216B	4M	2E
R2172	6C	1F
R2173	3J	1F
R2202	5D	2A
R2206	3D	2A
R2231	5G	2C
R2232	6G	2C
R2242	3G	2D
R2245	4H	2D
R2247	4H	2D
R2267	3M	2E
R2265	3M	2G
R2306	4D	2B
R2308	3D	2B
R2311	5F	2B
R2312	4D	2B
R2331	5G	2C
R2333	5G	2C
R2336	5G	2D
R2352	5G	2D
R2361	5I	2E
R2363	5J	2E
R2367	5M	2E
R23B5	5M	2G
R2413	4C	3B
R2414	4C	3B
R2422	4B	3C
R2425	4C	3C
R2445	3G	3D
R2451	3F	3D
R2461	5K	3E
R2463	5G	3E
R2467	5J	3E
R2466	4K	3E
R2475	4K	3F
R2520	4C	3B
R2530	5G	3C
R2535	4G	3C
R2540	5G	3D
R2550	4G	3D
RT2304	4D	2A
U2210	2D	2B
U2260	2J	2E
U2480	4K	3F
VR2211	3F	2B
VR2212	6E	2B
VR2215	5F	2B
W2472	4K	3F

P/O A4 ASSY

CIRCUIT NUMBER	SCHEM LOCATION	BOARD LOCATION
P405B	5A	2G
S4075	5A	2J

P/O A4 ASSY also shown on diagrams 3, 4, 7, 8, 9, 10, 11, 12, and 13

http://manoman.sqhill.com

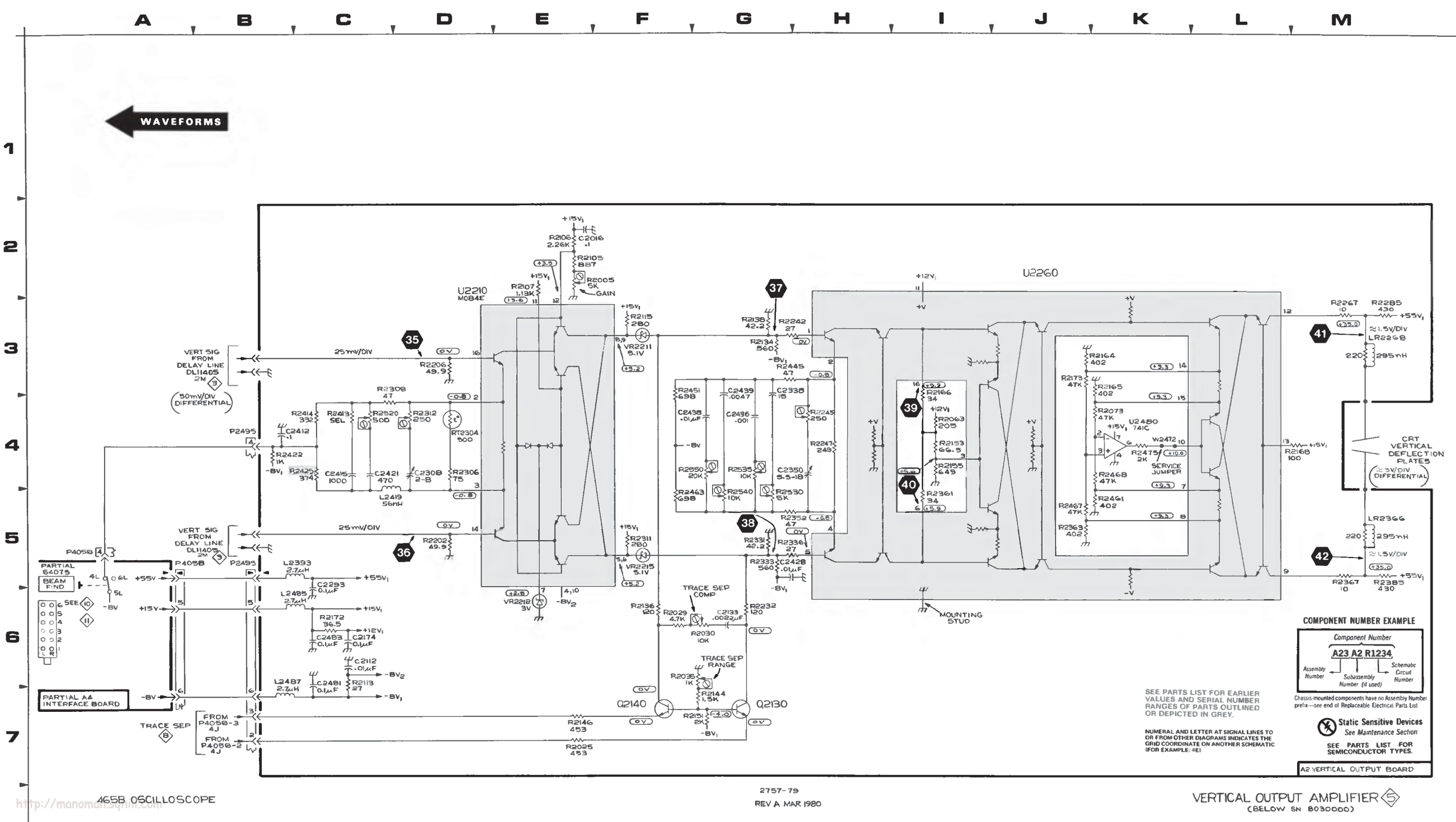

http://manomanshqnm.com

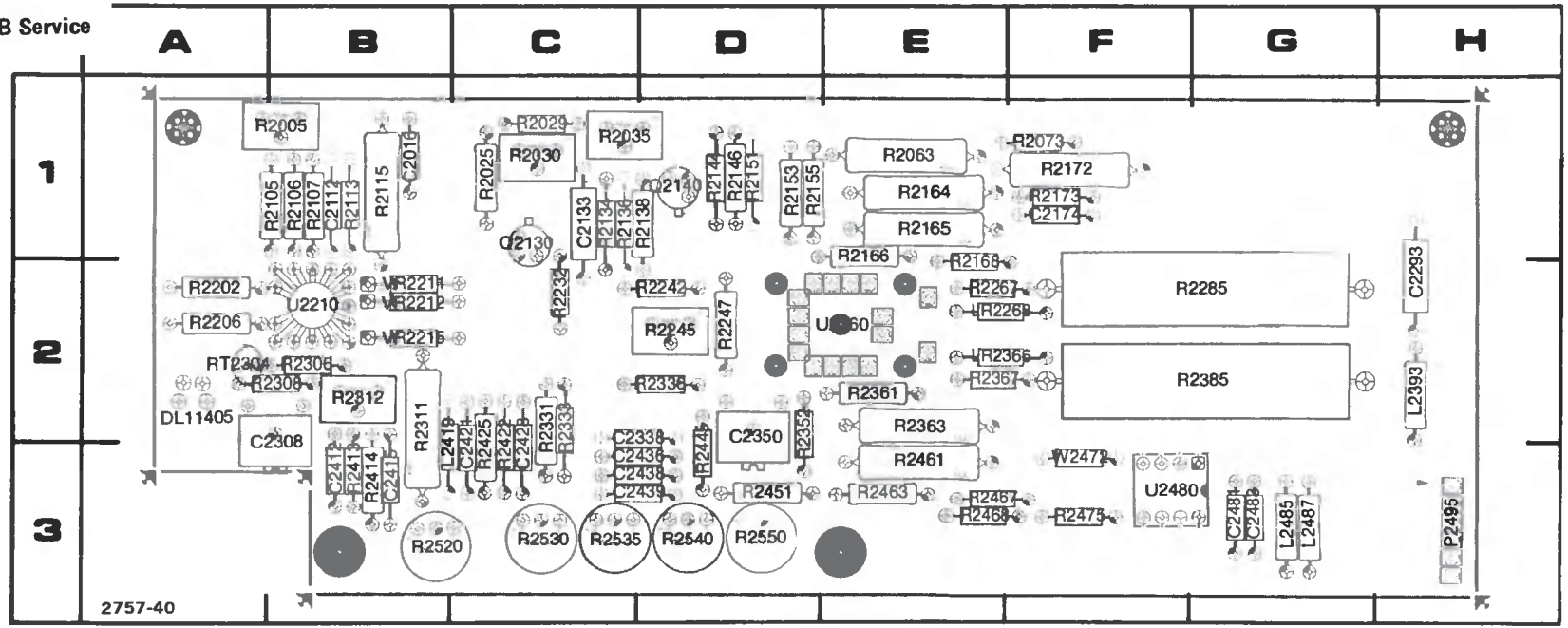

Figure 8-5B. A2 Vertical Output circuit board (below SN B030000).

REV A JUN 1979

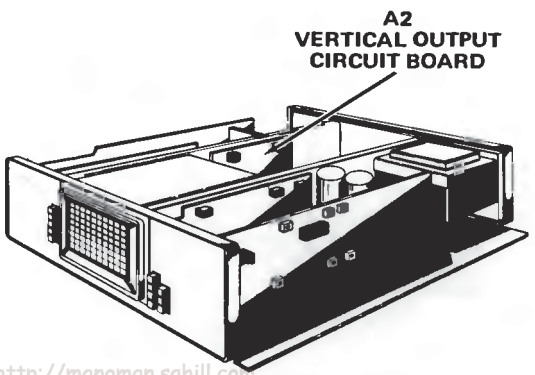

http://manoman.sqhill.com

465B CONTROL SETTINGS

DC Voltages

VERT MODE	CH 1
Vertical POSITION	Midrange
AC-GND-DC (both)	GND

AC Waveforms

VERT MODE	CH 1
VOLTS/DIV	5 mV
CH 1 AC-GND-DC	DC
Input	20 mV positive-going square wave

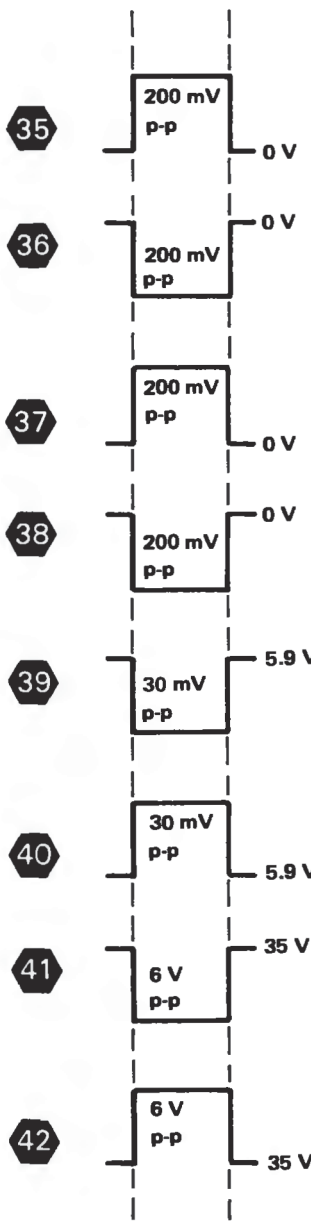

http://manoman.sqhill.com

SWEEP AND Z-AXIS LOGIC DIAGRAM 7

P/O A4 ASSY

CIRCUIT NUMBER	SCHEM LOCATION	BOARD LOCATION	CIRCUIT NUMBER	SCHEM LOCATION	BOARD LOCATION	CIRCUIT NUMBER	SCHEM LOCATION	BOARD LOCATION
C439B	4B	7L	P439B	3A	7M	W4544	9N	9G
			P4561	5A	9H			
J4463	1A	9H	P4571	7N	10I			
J4487	6B	9K						

P/O A4 ASSY also shown on diagrams 3, 4, 5, 8, 9, 10, 11, 12, and 13

P/O A6 ASSY

CIRCUIT NUMBER	SCHEM LOCATION	BOARD LOCATION	CIRCUIT NUMBER	SCHEM LOCATION	BOARD LOCATION	CIRCUIT NUMBER	SCHEM LOCATION	BOARD LOCATION
CR6218	7B	5D	P6010	BB	1D	R6019	8A	2D
CR6219	7B	5D	P6010	9A	1O	R6217	7B	5D
			P6015	BB	1O			
P4487	6B	5D	P6015	9A	1D	S6205	6A	4B
P4487	6M	5O				S6260	1A	4H
P6002	8A	1B	R6012	9A	1C			

P/O A6 ASSY also shown on diagrams 8, 9, and 10

P/O A7 ASSY

CIRCUIT NUMBER	SCHEM LOCATION	BOARD LOCATION	CIRCUIT NUMBER	SCHEM LOCATION	BOARD LOCATION	CIRCUIT NUMBER	SCHEM LOCATION	BOARD LOCATION
C7052	9C	1G	CR7098	1G	1L	Q7076	9E	1I
C7127	5J	2D	CR7099	1F	1L	Q70B3	2F	1J
C7158	8J	2H	CR7149	9K	2G	Q7092	1F	1K
C7165	8J	2H	CR7154	1E	1G	Q7093	2D	1K
C7174	3H	2I	CR7184	4F	2J	Q7095	2D	1K
C7182	3F	2J	CR7272	6I	3I	Q7155	8J	2G
C71B7	2D	2K	CR7277	6L	3I	Q7174	3H	2I
C718B	8M	2K	CR7281	3F	2J	Q71B1	4E	1J
C7192*	3D	2K	CR7362	7I	4H	Q7182	4F	2J
C7196	7M	2K	CR7381	2C	3J	Q7195	3D	1L
C7197	8M	2K	CR7382	2E	3J	Q7254	4H	3G
C7247	7M	3G	CR7383	2C	3J	Q7256	4H	3G
C7263	7I	2H	CR73B5	1D	3J	Q7460	7J	4H
C7265	6I	2H	CR73B6	2E	4J	Q7465	7L	4H
C7273	6I	3I	CR7387	3F	4J			
C72B6	8L	2K	CR7449	4I	4G	R7049	1D	1G
C7288	8M	2K	CR7451	8K	4G	R7052	1E	1G
C7297	BM	2L	CR7463	5C	4H	R7056	1E	1G
C7303	5J	3A	CR7464	6C	4H	R7057	1E	1G
C7371	5I	3I				R7062	8E	1H
C7376	6K	3I	J4541	1C	5I	R7063	BC	1H
C7377	5H	3J	J4571	4C	5F	R7064	7C	1H
C7447	5H	4F	J7076	3L	1I	R7065	8E	1H
C7447	5I	4F	J7077	2L	1I	R7066	8C	1H
C7449	5I	4G	J7078	1L	1J	R706B	8O	1H
C7453*	5I	4G				R7069	7D	1H
C7458	7K	5H	L7278	5H	3J	R7070	8D	1H
C7461	7J	4H				R7077	1G	1J
C7471	7H	4I	P7052	BC	1G	R707B	2I	1J
C7507	9M	5B				R7079	4E	1J
			Q7053	1E	1G	R70B4	2F	1K
CR7072	9D	1I	Q7055	1E	1G	R70B5	1F	1K
CR7073	9E	1I	Q7067A	BE	1H	R7086	3F	1K
CR707B	2F	1J	Q7067B	8C	1H	R7087	2E	1K
CR70B4	2G	1K	Q7074	8D	1I	R7088	2D	1K
CR70B5	2G	1K	Q7075	8D	1I			
CR7097	1G	1L						

TABLE (cont)

*See Parts List for serial number ranges.

http://fotoman.sqhill.com

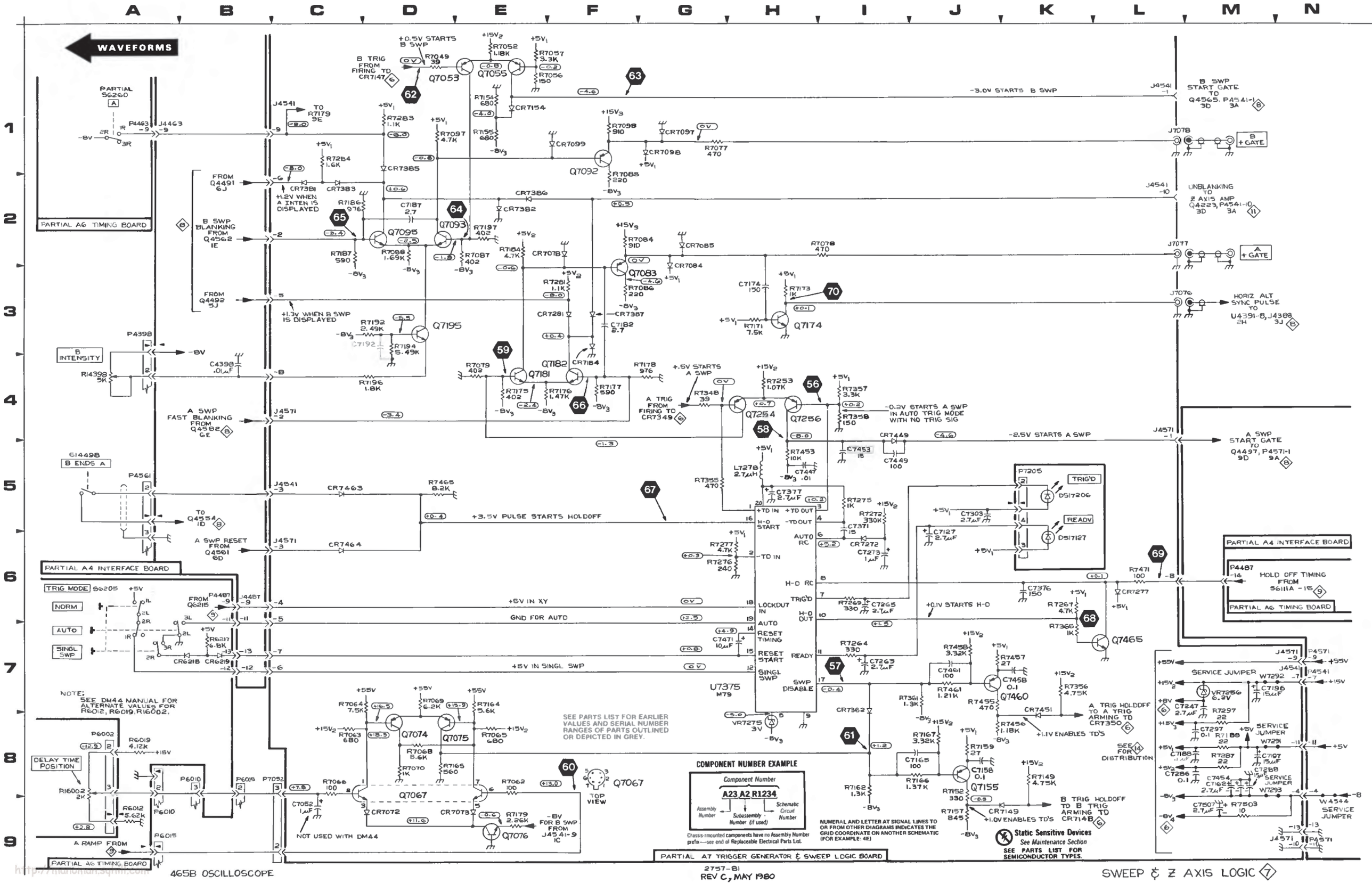
WAVEFORMS
PARTIAL A6 TIMING BOARD
PARTIAL A4 INTERFACE BOARD
PARTIAL A7 TRIGGER GENERATOR & SWEEP LOGIC BOARD
PARTIAL A6 TIMING BOARD
B SWP START GATE TO Q4565, P4541-1 3D 3A
B + GATE
UNBLANKING TO Z AXIS AMP Q4223, P4541-10 3D 3A
A + GATE
HORIZ ALT SYNC PULSE TO U4391-8, J4388 2H 3J
A SWP START GATE TO Q4497, P4571-1 9D 9A
HOLD OFF TIMING FROM S6111A -15
-3.0V STARTS B SWP
-2.5V STARTS A SWP
-0.2V STARTS A SWP IN AUTO TRIG MODE WITH NO TRIG SIG
+3.5V PULSE STARTS HOLDOFF
+5V IN XY
GND FOR AUTO
+5V IN SINGL SWP
+0.1V STARTS H-D
A TRIG HOLDOFF TO A TRIG ARMING TD CR7350
B TRIG HOLDOFF TO B TRIG ARMING TD CR7148
+1.1V ENABLES TD'S
+1.0V ENABLES TD'S
SEE PARTS LIST FOR EARLIER VALUES AND SERIAL NUMBER RANGES OF PARTS OUTLINED OR DEPICTED IN GREY.
COMPONENT NUMBER EXAMPLE
Component Number
A23 A2 R1234
Assembly Number
Subassembly Number (if used)
Schematic Circuit Number
Chassis-mounted components have no Assembly Number prefix—see end of Replaceable Electrical Parts List.
NUMERAL AND LETTER AT SIGNAL LINES TO OR FROM OTHER DIAGRAMS INDICATES THE GRID COORDINATE ON ANOTHER SCHEMATIC (FOR EXAMPLE: 4E)
Static Sensitive Devices
See Maintenance Section
SEE PARTS LIST FOR SEMICONDUCTOR TYPES.
NOTE: SEE DM44 MANUAL FOR ALTERNATE VALUES FOR R6012, R6019, R16002.
NOT USED WITH DM44
TOP VIEW
U7375
M79
SERVICE JUMPER
SEE FOR DISTRIBUTION
2757-81
REV C, MAY 1980
465B OSCILLOSCOPE
SWEEP & Z AXIS LOGIC 7

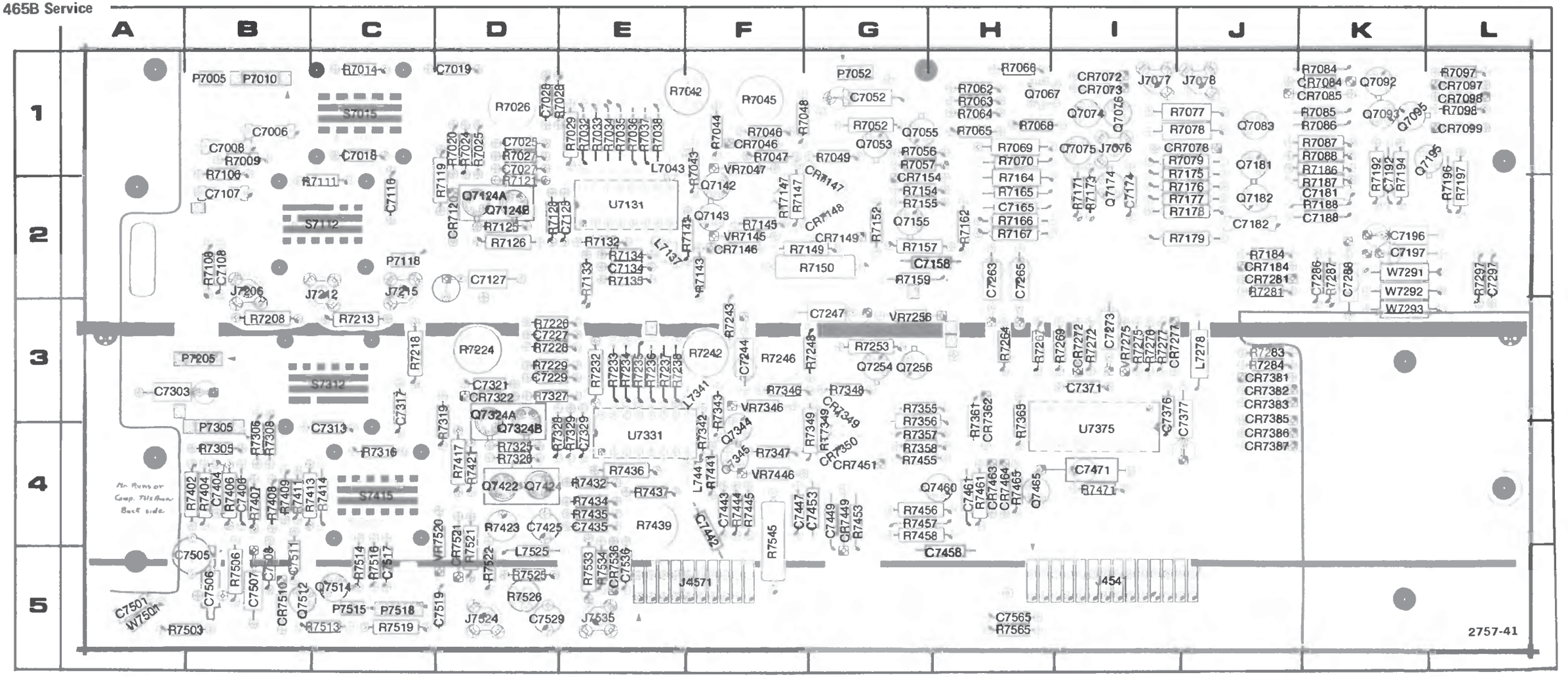

Figure 8-6. A7 Trigger Generator and Sweep Logic circuit board.

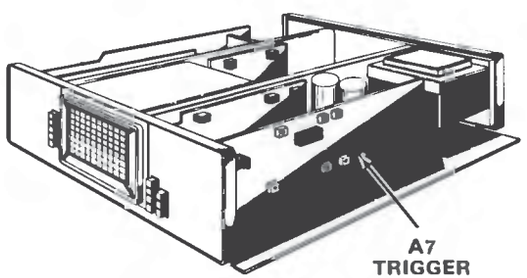

http://manoman.sqhill.com

465B CONTROL SETTINGS

DC Voltages

A TRIG MODE	NORM (sweep not running)
TRIGGER SOURCE (both)	EXT
TRIGGER LEVEL (both)	Midrange
TRIGGER SLOPE (both)	+
TRIGGER COUPLING (both)	AC
VERT MODE	A TRIG VIEW and CHOP
AC-GND-DC (both)	GND

AC Waveforms

TIME/DIV	0.2 ms
TRIGGER SOURCE (both)	EXT
TRIGGER LEVEL (both)	Midrange
TRIGGER SLOPE (both)	+
TRIGGER COUPLING (both)	AC
VERT MODE	A TRIG VIEW and CHOP
HORIZ DISPLAY	A INTEN
DELAY TIME POSITION	Fully counterclockwise
Trigger Input (both)	0.5 V, 1 kHz square wave

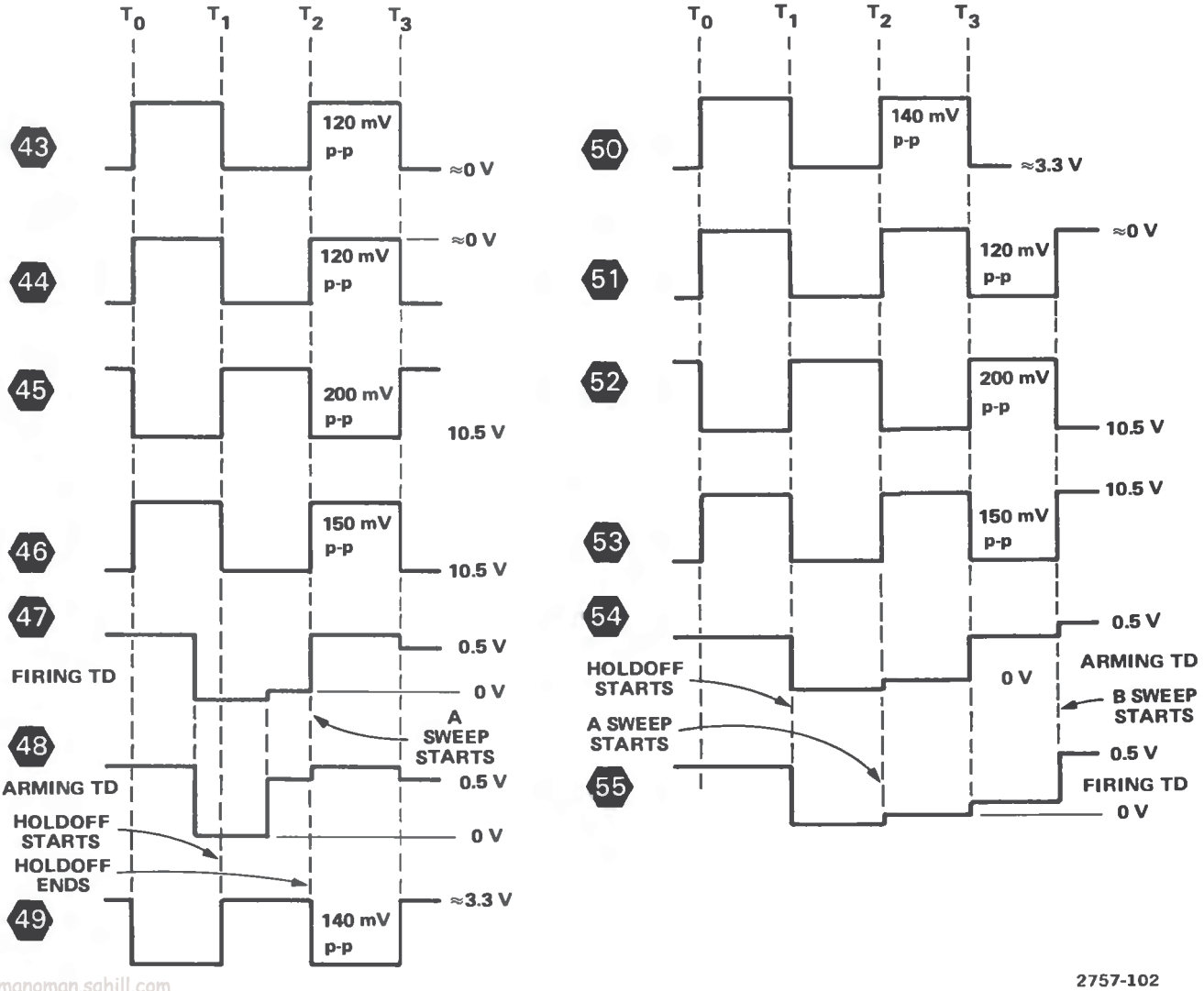

2757-102

http://manoman.sqhill.com

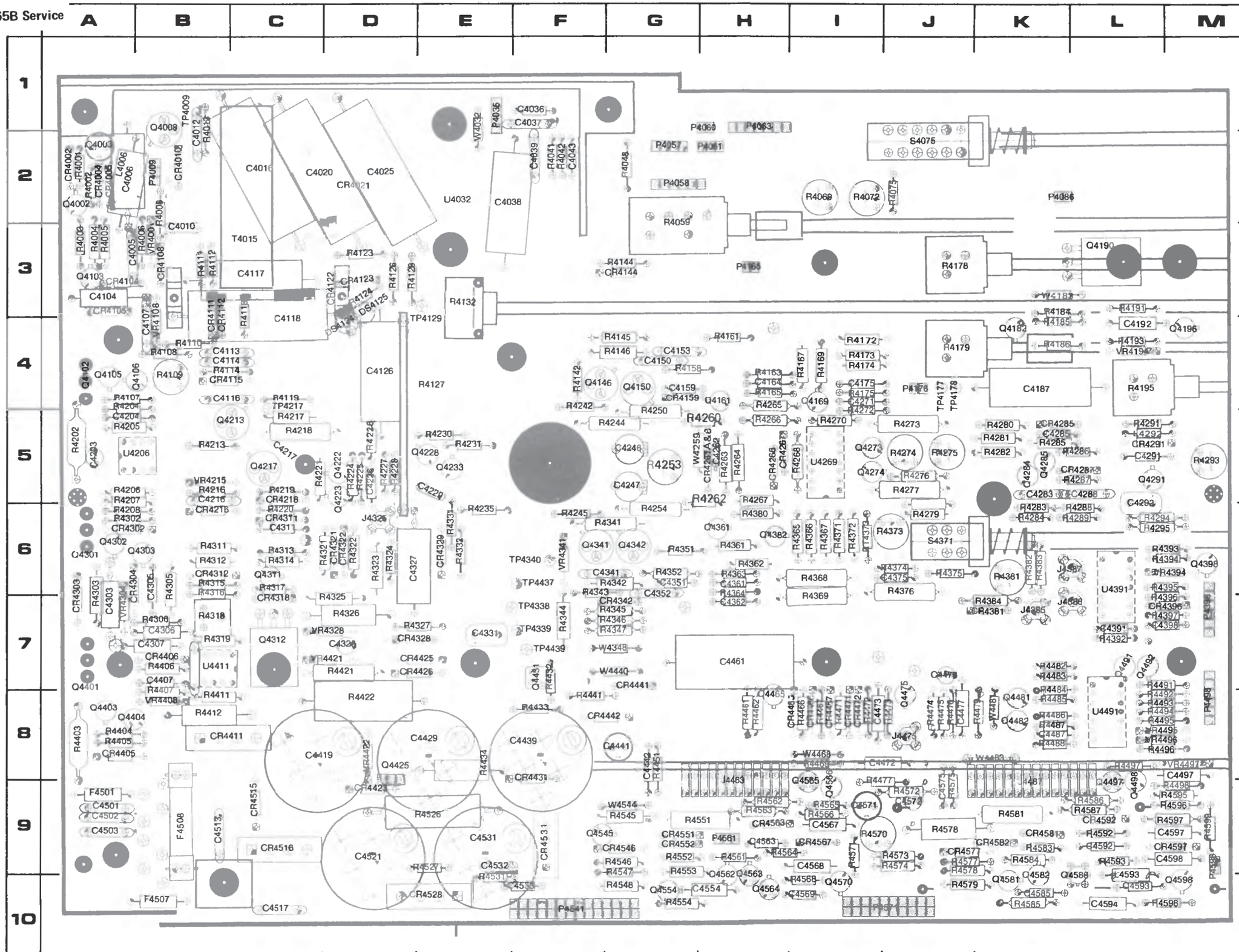

Figure 8-7. A4-Interface circuit board.

http://manoman.sqhill.com

465B CONTROL SETTINGS

DC Voltages

A TRIG MODE	NORM (sweep not running)
AC-GND-DC (both)	GND

AC Waveforms

A TRIG MODE	AUTO (no trigger signal)
B TRIGGER SOURCE	STARTS AFTER DELAY
HORIZ DISPLAY	A INTEN
DELAY TIME POSITION	5.00
A TIME/DIV	1 ms
B TIME/DIV	0.1 ms
AC-GND-DC (both)	GND

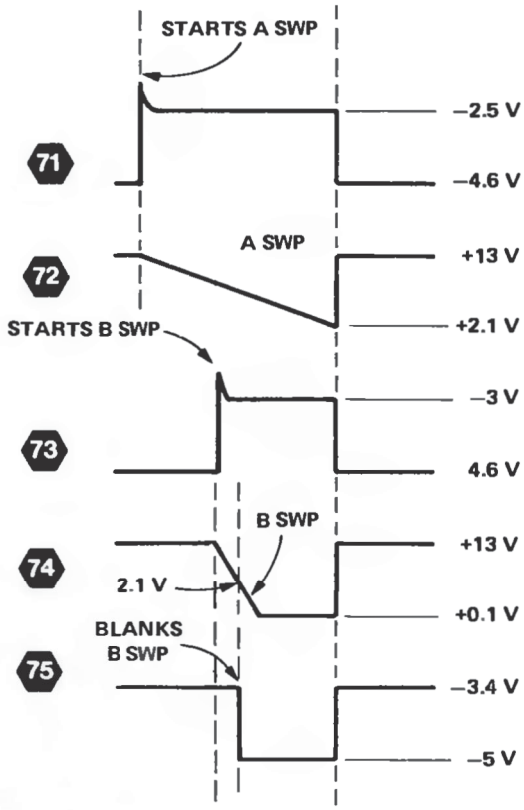

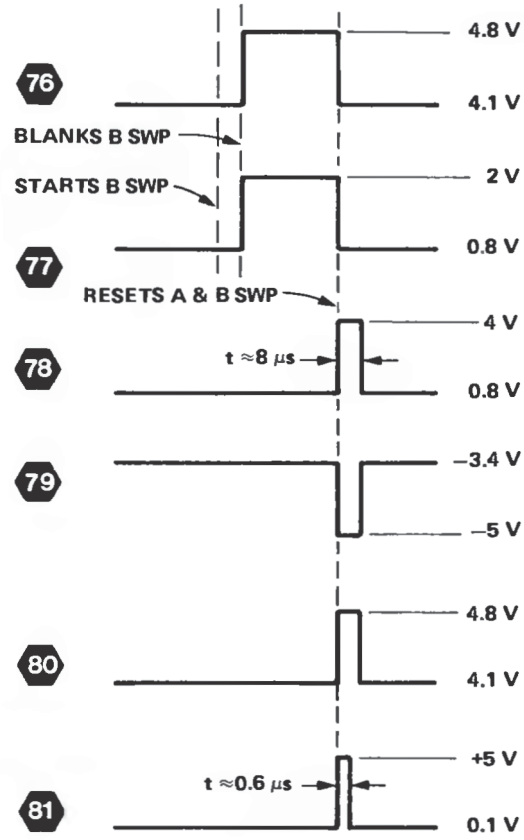

2757-42

Static Sensitive Devices
See Maintenance Section

COMPONENT NUMBER EXAMPLE

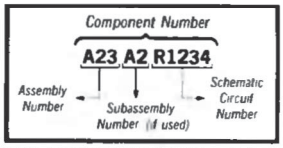

Chassis-mounted components have no Assembly Number prefix—see end of Replaceable Electrical Parts List

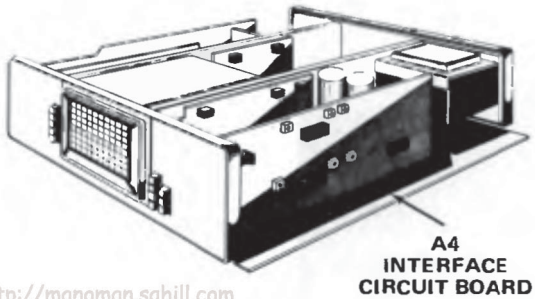

A4
INTERFACE
CIRCUIT BOARD

http://manoman.sqhill.com

HORIZONTAL DISPLAY LOGIC AND A & B SWEEP GENERATORS
DIAGRAM 8

P/O A4 ASSY

CIRCUIT NUMBER	SCHEM LOCATION	BOARD LOCATION
C4391	4D	7L
C4441	4B	BG
C4442	1C	BG
C4442	1C	BG
C4472	2F	7I
C4473	5L	8I
C4476	7K	7J
C4477	7J	8J
C44B7	5J	BK
C4497	BG	BM
C4554	1E	10H
C4563	1B	9H
C4567	3D	9I
C456B	2G	9I
C4569	1E	10I
C4571	1A	9I
C4572	9C	9J
C4575	6C	9J
C45B5	6E	10K
C4592	7B	9L
C4593	9A	10L
C4594	1A	10L
C4597	BD	9M
C459B	8G	9M
CR4396	3G	7L
CR4465	4L	BI
CR4466	4L	8I
CR4467	5L	BI
CR4471	5L	BI
CR4472	5L	8I
CR4546	1C	9G
CR4551	1B	9G
CR4552	1B	9G
CR4563	3D	9H
CR4567	2G	9I
CR4577	6C	9J
CR45B1	6B	9K
CR45B2	6B	9K
CR4592	9D	9L
CR4597	8G	9M
J4387	2J	6L
J43BB	3G	7L
J4463	2D	9H
J4463	2E	9H
J4463	2E	9H
J4463	4G	9H
J4463	4M	9H
J4463	5M	9H
J4475	5M	8J
J44B7	3G	9K
J44B7	6E	9K
J4487	7E	9K
J44B7	BD	9K
J4541	1N	10F
P4541	1M	10F
P4541	3A	10F
P4541	5L	10F
P4561	1M	9H
P4571	6M	10I
P4571	9A	10J
Q4398*	3I	6M
Q4465	2L	BH
Q4475	7K	8J
Q44B1	5K	BK
Q44B2	5K	BK
Q4491	6K	7L
Q4492	5K	7L
Q4497	9D	9L
Q4498	BF	9L
Q4545	1B	9F
Q4554	1D	10G
Q4562	1E	10H
Q4563	1B	10H
Q4564	1C	10H
Q4565	3D	9I
Q4566	2E	9I
Q4570	3G	10I
Q4581	6D	10K
Q45B2	6E	10K
Q45B8	7B	10L
Q45BBA	7A	10L
Q45BBB	7C	10L
Q459B	BG	10M
R4392	5G	7L
R4393*	3I	6L
R4394	3I	6L
R4395	2H	6L
R4396	3G	7L
R4397	4H	7L
R4451	1B	BG
R4461	1K	BH
R4462	1I	BH
R4466	4M	BI
R4467	5L	BI
R4469	2E	8I
R4471	5M	8I
R4472	4L	BI
R4473	5M	8J
R4474	7K	8J
R4475	7J	8J
R4476	7J	8J
R4477	2F	9I
R4479	7K	BK
R44B2	4G	7K
R44B3	5G	7K
R4484	5G	BK
R4485	4I	8K
R44B6	4I	8K
R44B7	5I	8K
R44BB	5H	BK
R4491	6J	7L
R4492	6J	BL
R4493	5J	BL
R4494	5J	BL
R4495	5I	BL
R4496	61	BL
R4497	BF	BL
R449B	8F	9M
R4545	1B	9G
R4546	1E	9G
R4547	1C	10G
R454B	1D	10G
R4551	1G	9G
R4552	1B	9G
R4553	1D	10G
R4554	1D	10G
R4561	1C	9H
R4562	3E	9H
R4563	3C	9H
R4563	3C	9H
R4563	3C	9H
R4564	1B	9H
R4565	2E	9I
R4566	3E	9I
R456B	1G	10I
R4570	1A	9I
R4571	2F	9I
R4571	2F	9I
R4572	3E	9J
R4573	1A	9J
R4574	1A	9J
R4575	6B	9J
R4576	6B	9J
R4577	6C	9J
R4578	6E	9J
R4579	6D	10K
R45B1	7G	9K
R4583	6B	9K
R4584	6D	9K
R45B5	6D	10K
R4586	9E	9L
R4587	9C	9L
R4592	6C	9L
R4593	7B	9L
R4595	9F	9M
R4596	BF	9M
R4597	9E	9M
R459B	9A	10M
R4599	8G	9M
U4391	5D	6L
U4391B	4G	6L
U4391C	6I	6L
U4391D	2H	6L
U4491	4D	BL
U4491A	5H	8L
U4491B	6I	BL
VR4394	3I	6L
VR4495	5I	BL
VR4496	61	BL
W434B	4B	7G
W4440	4B	7G
W4544	5B	9G

P/O A4 ASSY also shown on diagrams 3, 4, 5, 7, 9, 10, 11, 12, and 13

***See Parts List for serial number ranges.**

P/O A6 ASSY

CIRCUIT NUMBER	SCHEM LOCATION	BOARD LOCATION
P4463	4G	5G
S6111A	7D	3C
S6260	4F	4H

P/O A6 ASSY also shown on diagrams 7, 9, and 10

CHASSIS MOUNTED PARTS	R14498	3K	CHASSIS

http://manoman.sqhill.com

WAVEFORMS

HORIZONTAL DISPLAY LOGIC AND A&B SWEEP GENERATORS

PARTIAL A4 INTERFACE BOARD

PARTIAL A6 TIMING BOARD

SEE PARTS LIST FOR EARLIER VALUES AND SERIAL NUMBER RANGES OF PARTS OUTLINED OR DEPICTED IN GREY.

NUMERAL AND LETTER AT SIGNAL LINES TO OR FROM OTHER DIAGRAMS INDICATES THE GRID COORDINATE ON ANOTHER SCHEMATIC (FOR EXAMPLE: 4E)

COMPONENT NUMBER EXAMPLE

Component Number: A23 A2 R1234 (Assembly Number — Subassembly Number (if used) — Schematic Circuit Number)

Chassis-mounted components have no Assembly Number prefix—see end of Replaceable Electrical Parts List.

Static Sensitive Devices See Maintenance Section

SEE PARTS LIST FOR SEMICONDUCTOR TYPES.

EXAMPLE:

4E INDICATES THE GRID COORDINATE ON ANOTHER SCHEMATIC.

http://manoman.tekhill.com

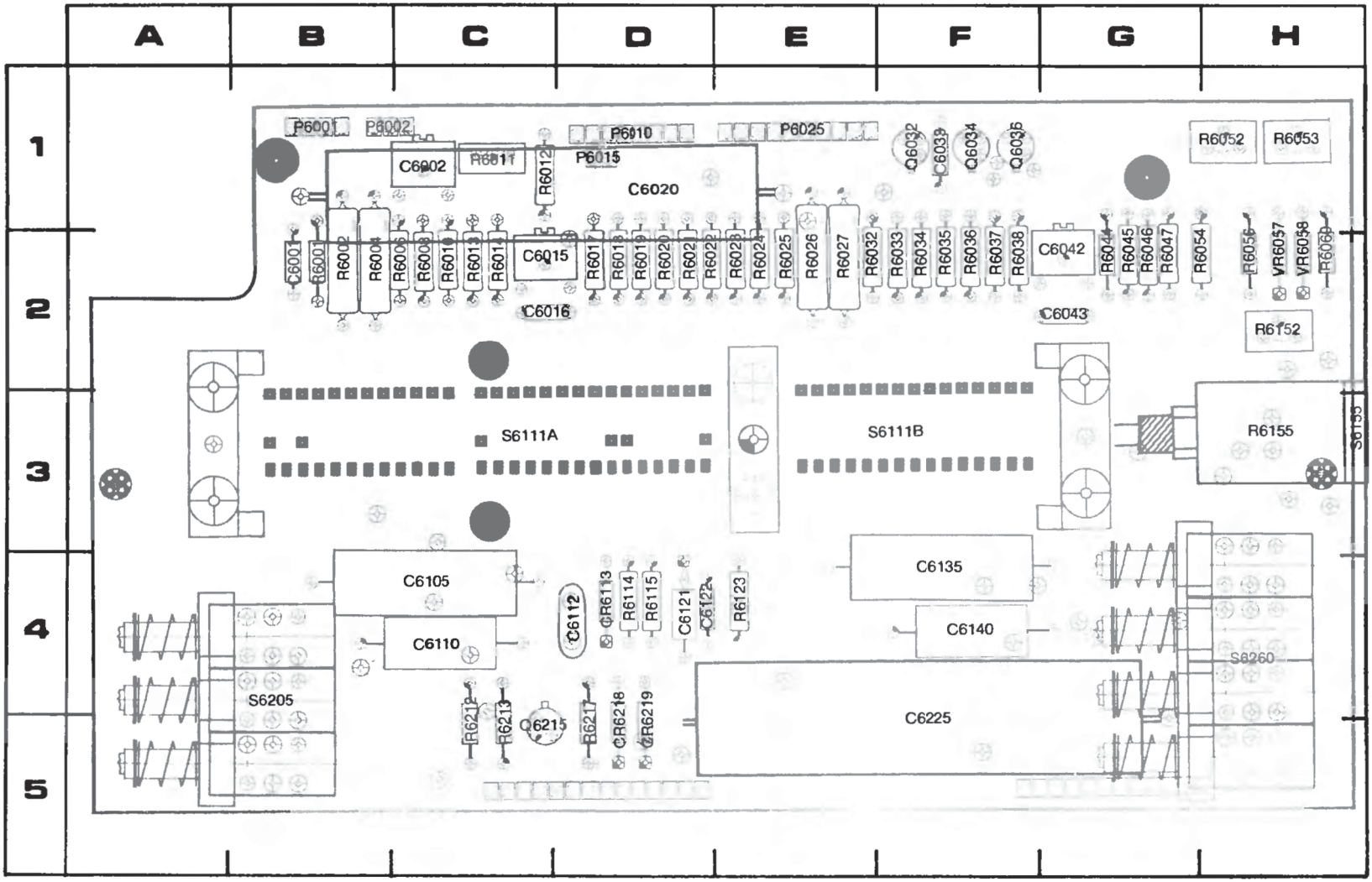

Figure 8-8. A6-Timing circuit board.

2757-44

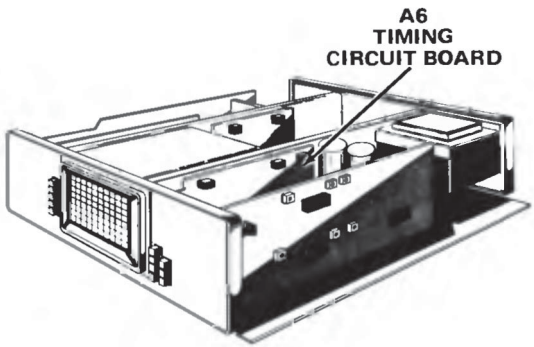

Static Sensitive Devices
See Maintenance Section

COMPONENT NUMBER EXAMPLE

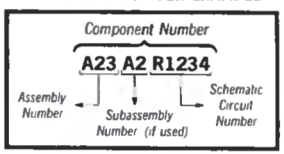

Chassis-mounted components have no Assembly Number prefix—see end of Replaceable Electrical Parts List

http://manoman.sqhill.com

465B CONTROL SETTINGS

DC Voltages

A TIME/DIV	X-Y
AC-GND-DC (both)	GND

AC Waveforms

A TRIG MODE	AUTO (no trigger signal)
B TRIGGER SOURCE	STARTS AFTER DELAY
HORIZ DISPLAY	A INTEN
DELAY TIME POSITION	5.00
A TIME/DIV	1 ms
B TIME/DIV	0.1 ms
AC-GND-DC (both)	GND

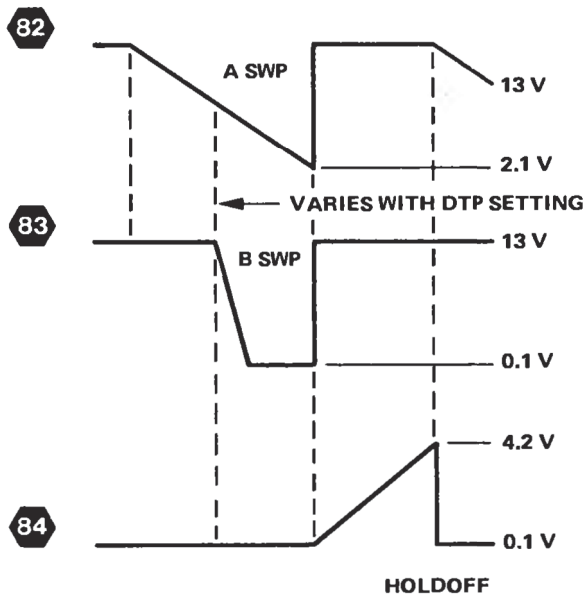

2757-105

http://manoman.sqhill.com

A & B TIMING SWITCH

DIAGRAM 9

P/O A4 ASSY

CIRCUIT NUMBER	SCHEM LOCATION	BOARD LOCATION	CIRCUIT NUMBER	SCHEM LOCATION	BOARD LOCATION	CIRCUIT NUMBER	SCHEM LOCATION	BOARD LOCATION
P4498	2G	BM	W446B	1A	8I	W4544	1A	9G
			W44B1	1A	BK			
VR4497	3G	8M	W44B3	1A	BK			

P/O A4 ASSY also shown on diagrams 3, 4, 5, 7, 8, 10, 11, 12, and 13

P/O A6 ASSY

CIRCUIT NUMBER	SCHEM LOCATION	BOARD LOCATION	CIRCUIT NUMBER	SCHEM LOCATION	BOARD LOCATION	CIRCUIT NUMBER	SCHEM LOCATION	BOARD LOCATION
C6001	5B	2B	Q6034	1F	1F	R6035	2J	2F
C6002	3C	1C	Q6036	1I	1F	R6036	2I	2F
C6015	5B	2C	Q6215	6B	5C	R6037	3I	2F
C6016	5B	2C				R603B	3I	2F
C6020	4B	2D	R6001	5B	2B	R6044	3I	2G
C6033	2E	1F	R6002	4D	2B	R6045	6M	2G
C6042	2L	2G	R6004	4D	2B	R6046	6M	2G
C6043	2L	2G	R6006	4D	2C	R6047	6M	2G
C6105	4B	4C	R6008	5D	2C	R6052	1H	1H
C6110	4C	4C	R6010	5D	2C	R6053	1G	1H
C6112	4F	4D	R6011	2D	1C	R6054	7M	2H
C6121	5F	4D	R6013	5E	2C	R6056	2H	2H
C6122	5F	4D	R6014	6E	2C	R6060	1F	2H
C6135	2L	4F	R6017	6E	2D	R6114	3F	4D
C6140	1K	4F	R6018	6E	2D	R6115	3F	3H
C6225	2L	5F	R6020	3C	2D	R6123	2C	4E
			R6021	2D	2D	R6152	5M	2H
CR6113	3F	4D	R6022	2D	2D	R6155	2F	3H
			R6023	4I	2E	R6212	7B	5C
P4463	1B	5G	R6024	4I	2E	R6213	7B	5C
P44B	1B	5D	R6025	3I	2E			
P6001	1E	1B	R6026	2J	2E	S6111B	7G	3C
P6010	5M	1D	R6027	1I	2E	S6155	1F	3H
P6025	3M	1E	R6032	2J	2E			
			R6033	2J	2F	VR6057	1H	2H
Q6032	2E	1F	R6034	2J	2F	VR6058	1H	2H

P/O A6 ASSY also shown on diagrams 7, 8, and 10

CHASSIS MOUNTED PARTS

CIRCUIT NUMBER	SCHEM LOCATION	BOARD LOCATION	CIRCUIT NUMBER	SCHEM LOCATION	BOARD LOCATION	CIRCUIT NUMBER	SCHEM LOCATION	BOARD LOCATION
CR1449B	3H	CHASSIS	R1449B	2H	CHASSIS			
DS16002	1E	CHASSIS	S1449B	3H	CHASSIS			

http://manoman.sqhill.com

WAVEFORMS

PARTIAL A6 TIMING BOARD

SERVICE JUMPER W4483 — P4487 -8 — +55V
SERVICE JUMPER W4481 — P4487 -10 — +15V
SERVICE JUMPER W4468 — P4463 -4 — +5V
SERVICE JUMPER W4544 — P4487 -4 — -8V
P4463 -5 — -8V
SEE 14 FOR DISTRIBUTION

UNCAL — P6001 4 — DSI6002 — 3 — SG155 — R6060 330 — +5V

+55V — Q6034 — R6053 10K — A SWP CAL

+55V — VR6057 4.3V — VR6058 6.2V — R6052 10K — B SWP CAL — Q6036

+44.8 — R6056 4.71K — +15V

+55V — Q6032 — C6033 0.01μF — R6155 150K VAR — +15V

R6022 11.8K — R6021 4.50M — R6011 20K — A TRIG VIEW DELAY

A TRIG VIEW OFFSET VOLTAGE TO R4471, J4463-6 5M 8 — P4463 -6 (-2.0)

PARTIAL A4 INTERFACE BOARD

R6123 1M — R6020 990K — -8V

A RAMP TO P6015-1 9A 7 — C6002 5.5-18 — 10μs TIMING — 82

A RAMP FROM Q4598, J4487-3 8G 8 7E — P4487 -3 (+13.0)

C6110 985 — R6004 1.0M (+48.3)

C6105 0.1 — R6002 1.5M

A SWP HIGH SPEED TIMING — C6020 9.9μF — C6016 43 — C6015 2-8 — C6001 47 — R6001 100

R6006 500K — R6008 250K — R6010 200K — R6013 100K — R6014 50K — R6017 25K — R6018 88.7K

A SWP I TO Q4497, J4463-2 9D 8D 8 — -2 (-1.5)

TO +5V IN XY U7375-12 7G 7 AND TO CR4285 IC 10 — -9 — Q6215 — +5V — R6212 560 — R6213 3K — -8V

TO R4383 3B 10 AND CR4441 4A 11 AND CR4396 3G J4487-6 8F 8 — -6 — -8V IN XY

P4498 — +55V — +5V — VR4497 3V — R14498 25K — CR14498 — S14498 B ENDS A

A TRIGGER HOLDOFF

P4487 -7 — R6115 287K — R6114 32.4K — +5V — CR6113 — C6112 790

PARTIAL A4 INTERFACE BOARD

HOLDOFF TIMING TO R7471 6L 7 — PARTIAL A5 TRIGGER BOARD

84 — +0.1 — -14 P4487

C6121 1.5μF — C6122 0.022

* NOTE: USED ONLY WITH DM SERIES.

SEE PARTS LIST FOR EARLIER VALUES AND SERIAL NUMBER RANGES OF PARTS OUTLINED OR DEPICTED IN GREY.

S6111 A AND B TIME/DIV

R6027 1.0M — R6026 1.5M — R6032 500K — R6033 250K — R6034 200K — R6035 100K — R6036 50K — R6037 25K — R6038 95.3K — R6044 47K — +15V

C6140 99B — C6135 0.1 — C6225 1μF — C6042 2-8 — C6043 43 — B SWP HIGH SPEED TIMING — 83 — (+13.0) — (-1.5)

P4463 -3 — B RAMP TO Q4570, J4463-3 2G 2E 8

P4463 -2 — B SWP I TO Q4565, J4463-2 3D 2D 8

** P6025 — -7 +55V — -9 +15V — -10 +5V — -8 -8V — -6

SEE 14 FOR DISTRIBUTION

R6025 250 — R6024 250 — R6023 500 — -5 — -4 — -1 — -2 — -3

** P6010 — -6 — -7 — -8 — -5

** NOTES:
1. P6025 AND PARTIAL P6010 USED FOR DM SERIES CONNECTIONS.
2. SEE 7 FOR OTHER PART OF P6010. 8A

+15V — R6152 5K — B TRIG VIEW DELAY — -4

R6045 5.23K — R6046 1.43M — R6047 301K — P4463 -7 — B TRIG VIEW OFFSET VOLTAGE TO R4466, J4463-7 5M 8 — (-3.5)

R6054 576K — -8V

NOTES:
1. DOT INDICATES CONTACTS ARE CLOSED.
2. SWITCH IS SHOWN IN XY POSITION.

S: XY .5 .2 .1 — ms: 50 20 10 5 2 1 .5 .2 .1 — μs: 50 20 10 5 2 1 .5 .2 .1 .05 .02

12 14 1 2 3 5 4 6 7 8 9 10 11 18 19 20 16 17 15 23 24 25 21 22 28 27 26 A

B 10 9 8 7 6 4 5 3 2 1 11 12 13 14 15

NUMERAL AND LETTER AT SIGNAL LINES TO OR FROM OTHER DIAGRAMS INDICATES THE GRID COORDINATE ON ANOTHER SCHEMATIC (FOR EXAMPLE: 4E)

COMPONENT NUMBER EXAMPLE

Component Number: A23 A2 R1234
Assembly Number — Subassembly Number (if used) — Schematic Circuit Number

Chassis-mounted components have no Assembly Number prefix—see end of Replaceable Electrical Parts List

Static Sensitive Devices — See Maintenance Section

SEE PARTS LIST FOR SEMICONDUCTOR TYPES

A & B TIMING SWITCH 9

http://mymanuals.cshill.com

REV A SEP 1979 2757-83

465B CONTROL SETTINGS

DC Voltages

A TIME/DIV	X-Y
CH 2 POSITION	Beam centered
Horizontal POSITION	Beam centered
AC-GND-DC (both)	GND

AC Waveforms

A TRIG MODE	AUTO (no trigger signal)
HORIZ DISPLAY	A
A TIME/DIV	1 ms
Horizontal POSITION	Trace centered
AC-GND-DC (both)	GND

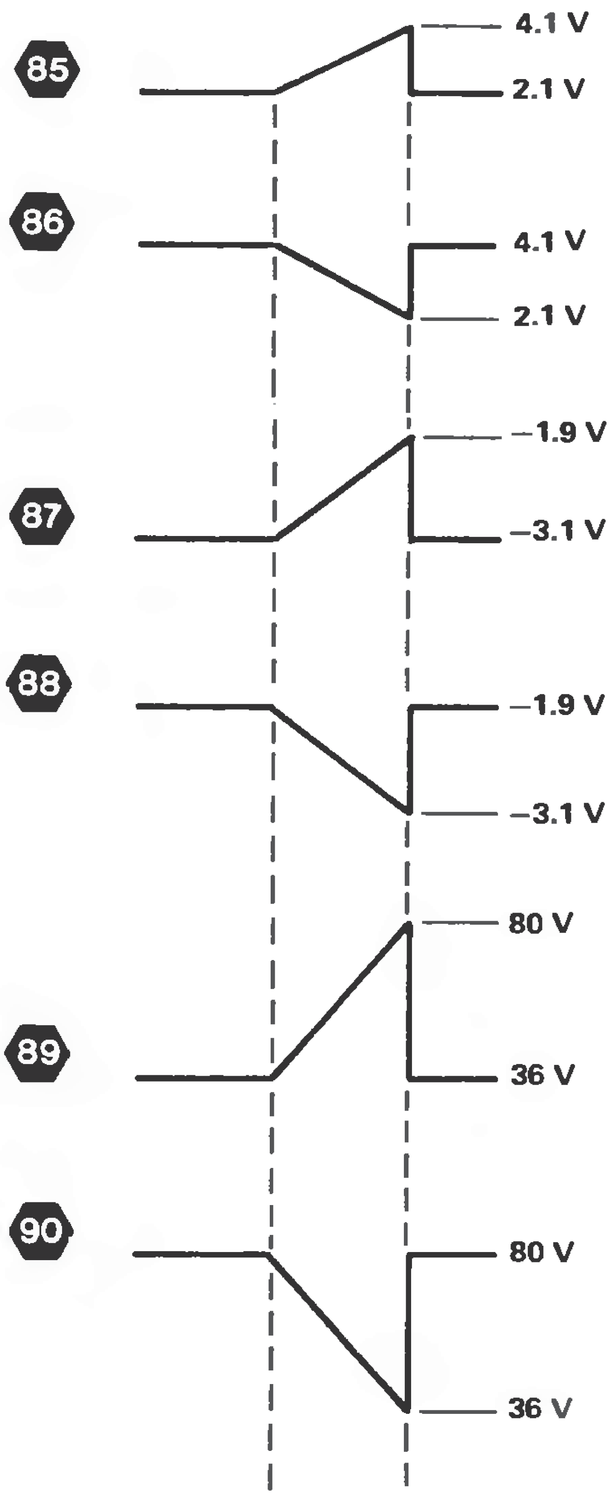

2757-106

http://manoman.sqhill.com

CRT CIRCUIT DIAGRAM 11

P/O A4 ASSY

CIRCUIT NUMBER	SCHEM LOCATION	BOARD LOCATION
C4003	7D	2A
C4005	4H	3A
C4006	5F	2A
C4010	4I	2B
C4012	6F	2B
C4016	6H	2C
C4020	6H	2C
C4025	6J	2D
C4036	5M	1F
C4037	3M	1F
C403B	5J	2E
C4039	5M	2F
C4043	4M	2F
C4104	3H	3A
C4107	3H	4B
C4113	2E	4B
C4114	1F	4B
C4116	1G	4B
C4117	3I	3C
C4118	2I	3C
C4126	7J	4D
C4216	2F	5B
C4217	4F	5C
C4226	6B	5D
C4229	5C	5E
C4311	3G	6C
C4327	4C	6D
CR4002	5D	2A
CR4004	5F	2A
CR4005	7E	2A
CR4010	5E	2B
CR4021	7G	2D
CR4104	6E	3A
CR4108	5H	3B
CR4111	3I	3B
CR4112	2I	3B
CR4115	1F	4B
CR4122	3J	3D
CR4123	3J	3D
CR4144	2C	3G
CR4216	1G	6B
CR421B	3F	5C
CR4311	2H	6C
CR4321	3E	6D
CR4322	3B	6D
CR4328	1E	7D
CR4329	4C	6E
CR4441	4B	7G
CR4442	3B	BG
DS4124	5J	4D
DS4125	6J	3D
F4508	5F	9B
J4325	5A	6D
L4006	5F	2A
P4009	7F	2B
P4035	5M	1E
P4165	4M	3H
P4176	2M	4J
P4541	3A	10F
Q4002	6D	2A
Q4008	5E	1B
Q4103	6E	3A
Q4213	2F	5B
Q4217	3F	5C
Q4222	3E	5D
Q4223	3D	5D
Q4228	5C	5E
Q4233	5D	5E
R4001	5D	2A
R4002	5E	2A
R4003	6D	3A
R4004	5D	3A
R4005	6D	3A
R4006	4H	2B
R4008	5H	2B
R4013	6E	2B
R4041	5M	2F
R4042	4N	2F
R4048	4N	2G
R4059A	2B	2G
R4059B	4J	2G
R4069	3M	2I
R4072	4M	2I
R4108	3H	4B
R4109	3G	4B
R4110	3H	4B
R4111	3I	3B
R4112	3I	3B
R4113	2I	3C
R4114	1G	4B
R4119	2I	4C
R4123	7H	3D
R4124	3J	3D
R4126	4I	3D
R4127A	5J	4E
R4127B	4J	4F
R4127C	5C	4E
R4127D	6C	4F
R412B	6J	3D
R4132	5J	3E
R4144	2B	3G
R4178	5M	3J
R4179	2M	4J
R4213	1E	5B
R4216	2E	5B
R4217	2G	5C
R4218	4F	3D
R4219	3F	5C
R4220	3E	6C
R4221	4E	5C
R4224	2D	5D
R4225	3E	5D
R4226	8C	5D
R4227	8B	5D
R422B	5C	5D
R4230	3C	5E
R4231	4E	5E
R4235	5D	6E
R4313	3F	8C
R4314	4D	6C
R4321	3D	6D
R4322	2D	6D
R4323	5B	6D
R4324	5E	6D
R4327	3D	7D
R4331	4E	6E
R4331	5C	6E
R4332	4C	6E
R4441	4B	6F
S4075	1D	2J
T4015	6F	3C
TP4009	6F	1B
TP4129	6K	3E
TP4217	2I	4C
U4032	1I	2E
VR4007	4I	3B
VR4108	3H	2B
VR4215	1E	5B
W4032	1I	1E

P/O A4 ASSY also shown on diagrams 3, 4, 5, 7, 8, 9, 10, 12, and 13

CHASSIS MOUNTED PARTS

CIRCUIT NUMBER	SCHEM LOCATION	BOARD LOCATION
L14165	4L	CHASSIS
L14176	2L	CHASSIS
P14325	5A	CHASSIS
Q14009	8F	CHASSIS
R4059A	2B	CHASSIS
R4059B	4J	CHASSIS
R4132	5J	CHASSIS
R4178	4M	CHASSIS
R4179	2M	CHASSIS
S4075	1C	CHASSIS
S6111A	4A	CHASSIS
V14000	2L	CHASSIS

http://manoman.sqhill.com

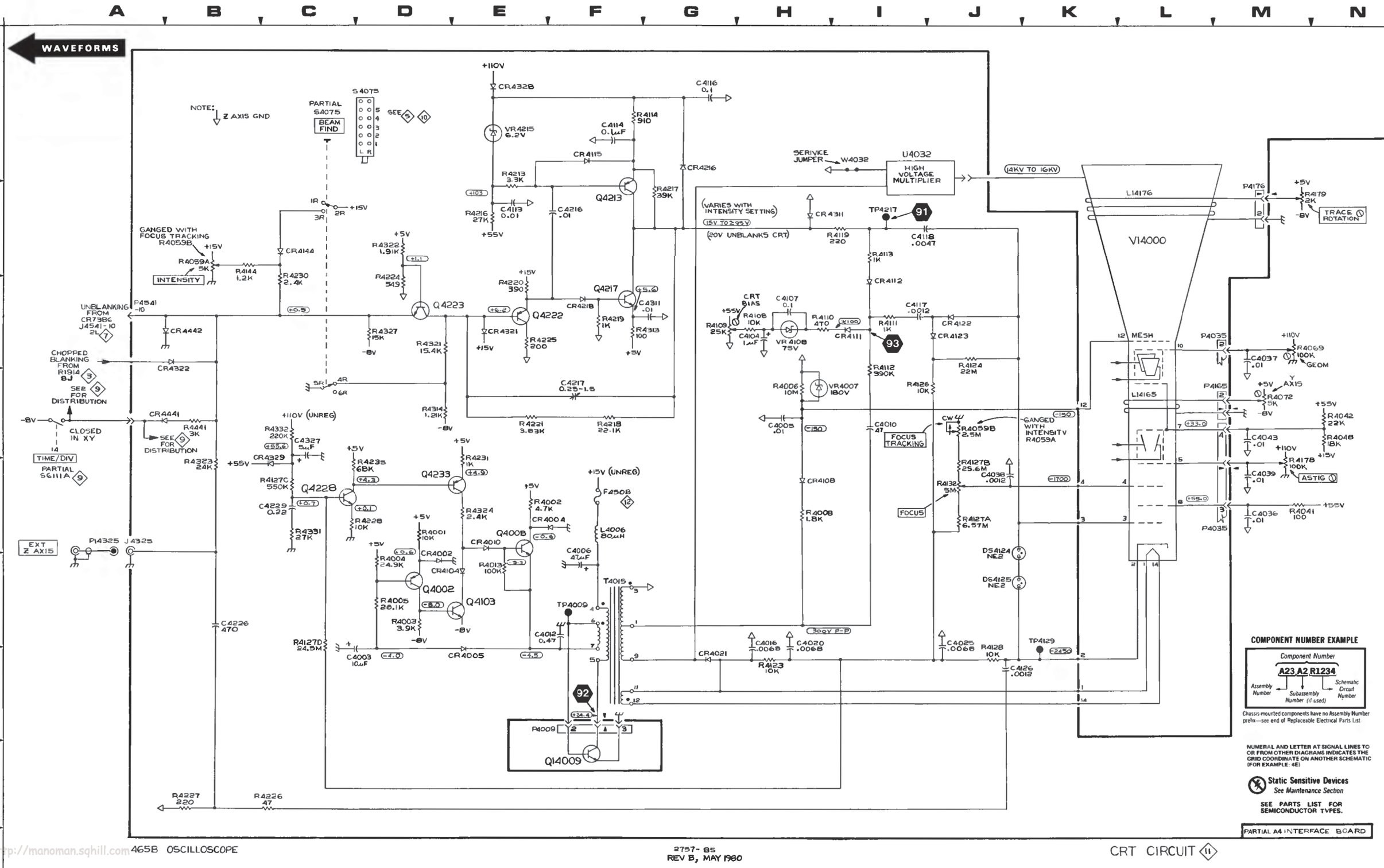
WAVEFORMS
NOTE: Z AXIS GND
PARTIAL S4075 BEAM FIND
S4075
+110V
CR4328
C4116 0.1
VR4215 6.2V
C4114 0.1µF
R4114 910
CR4115
R4213 3.3K
Q4213
R4217 39K
CR4216
R4216 27K
C4113 0.01
C4216 .01
+55V
SERVICE JUMPER W4032
U4032
HIGH VOLTAGE MULTIPLIER
14KV TO 16KV
L14176
P4176
+5V
R4179 2K
-8V
TRACE ROTATION
V14000
(VARIES WITH INTENSITY SETTING)
15V TO 95V
(20V UNBLANKS CRT)
CR4311
TP4217
91
C4118 .0047
R4119 220
R4113 1K
CR4112
GANGED WITH FOCUS TRACKING R4059B
+15V
R4059A 5K
INTENSITY
R4144 1.2K
CR4144
R4230 2.4K
IR
2R
3R
+5V
R4322 1.91K
R4224 549
Q4223
R4220 390
Q4217
CR4218
C4311 .01
R4219 1K
R4313 100
Q4222
CR4321
R4225 200
CRT BIAS
C4107 0.1
R4108 10K
R4109 25K
C4104 1µF
VR 4108 75V
R4110 4TO
CR4111
93
R4111 1K
C4117 .0012
CR4122
CR4123
R4112 390K
R4124 22M
R4126 10K
UNBLANKING FROM CR7386 J4541-10
P4541 -10
CR4442
R4327 15K
R4321 15.4K
C4217 0.25-1.5
R4221 3.83K
R4218 22.1K
CHOPPED BLANKING FROM R1914 8J
CR4322
SEE FOR DISTRIBUTION
CR4441
R4441 3K
CLOSED IN XY
TIME/DIV
PARTIAL S6111A
R4323 24K
+110V (UNREG)
R4332 220K
C4327 5µF
CR4329
+55V
R4127C 550K
Q4228
C4229 0.22
R4331 27K
R4235 68K
R4228 10K
Q4233
R4231 1K
R4324 2.4K
R4002 4.7K
CR4004
CR4010
Q4008
R4001 10K
CR4002
CR4104
R4004 24.9K
Q4002
R4005 26.1K
Q4103
R4003 3.9K
-8V
C4003 10µF
CR4005
R4013 100K
C4006 47µF
+15V (UNREG)
F4508
L4006 80µH
T4015
TP4009
C4012 0.47
R4127D 24.5M
C4226 470
EXT Z AXIS
P14325
J4325
R4227 220
R4226 47
P4009
Q14009
92
CR4021
C4016 .0068
C4020 .0068
R4123 10K
C4025 .0068
R4128 10K
C4126 .0012
TP4129
300V P-P
FOCUS TRACKING
R4059B 2.5M
GANGED WITH INTENSITY R4059A
R4127B 25.6M
C4038 .0012
R4132 5M
FOCUS
R4127A 6.57M
DS4124 NE2
DS4125 NE2
P4035
MESH
C4037 .01
R4069 100K
GEOM
P4165
L14165
AX15
R4072 5K
C4043 .01
R4042 22K
R4048 18K
C4039 .01
R4078 100K
ASTIG
C4036 .01
R4041 100
COMPONENT NUMBER EXAMPLE
Component Number
A23 A2 R1234
Assembly Number
Subassembly Number (if used)
Schematic Circuit Number
Chassis-mounted components have no Assembly Number prefix—see end of Replaceable Electrical Parts List
NUMERAL AND LETTER AT SIGNAL LINES TO OR FROM OTHER DIAGRAMS INDICATES THE GRID COORDINATE ON ANOTHER SCHEMATIC (FOR EXAMPLE: 4E)
Static Sensitive Devices
See Maintenance Section
SEE PARTS LIST FOR SEMICONDUCTOR TYPES.
PARTIAL A4 INTERFACE BOARD

POWER SUPPLY DIAGRAM 12

P/O A4 ASSY

CIRCUIT NUMBER	SCHEM LOCATION	BOARD LOCATION
C4203	7H	5A
C4203	7H	5A
C4204	5F	5A
C4303	2H	7A
C4305	2F	6B
C4306	1E	7B
C4307	1D	7B
C4326	6H	7D
C4331	4H	7E
C4407	3F	7B
C4419	6E	BD
C4429	1E	8E
C4439	1E	BF
C4521	3E	9D
C4531	5E	9E
C4532	2D	9E
C4533	3D	10F
CR4105	6G	3A
CR4302	1F	6A
CR4303	1H	7A
CR4304	1F	6A
CR4312	2F	6B
CR431B	5F	7C
CR4405	4H	8A
CR4406	1E	7B
CR4411	6D	8B
CR4423	1I	9D
CR4425	6I	7D
CR4426	2I	7D
CR4431	1H	BF
CR4515	7H	9C
CR4516	3D	9C
CR4528	4D	10E
CR4531	1D	9F
F4501	6D	9A
F4507	4D	10B
F4508	3H	9B
P4086	7C	2K
P4541	3J	10F
Q4102	6G	4A
Q4105	6G	4A
Q4106	7F	4A
Q4190	8D	3L
Q4301	1G	6A
Q4302	1G	6A
Q4303	2F	6B
Q4311	6F	6C
Q4312	5G	7C
Q4401	4G	7A
Q4403	3G	8A
Q4404	4F	8A
Q4425	1I	BD
Q4431	1I	7F
R4107	7G	4A
R4193	7E	4K
R4195	8E	4K
R4202	7H	5A
R4204	7G	4A
R4205	7F	5A
R4206	2G	5A
R4206	5E	5A
R4207	5E	5A
R420B	2G	6A
R4302	2G	6A
R4303	2H	7A
R4305	2F	6B
R4306	1E	7B
R4311	6E	6B
R4312	6E	6B
R4315	6F	6B
R4316	1F	6B
R4317	5F	6C
R4318	2F	7B
R4319	1D	7B
R4325	5H	7D
R4326	1F	7D
R4403	4H	8A
R4404	4G	BA
R4405	4G	BA
R4406	3F	7B
R4407	4E	BB
R4411	3E	8B
R4412	2I	8B
R4421	1D	7D
R4422	5H	8D
R4432	1I	7F
R4433	1I	8F
R4434	1I	8E
R4526	1H	9E
R4527	3D	9E
R4531	3D	10E
TP4337	6I	6F
TP4338	2I	7F
TP4339	4I	7F
TP4340	1I	6F
TP4439	7I	7F
U4206A	5F	5A
U4206B	6F	5A
U4411A	1E	7B
U4411D	4F	7B
VR4194	7E	4K
VR4304	1E	7A
VR4326	1H	7D
VR440B	2I	8B
VR4421	1D	7D
VR4422	1I	8D

P/O A4 ASSY also shown on diagrams 3, 4, 5, 7, 8, 9, 10, 11, and 13

P/O A7 ASSY

CIRCUIT NUMBER	SCHEM LOCATION	BOARD LOCATION
P7005	7B	1B
R710B	7B	2B

P/O A7 ASSY also shown on diagrams 3, 6, and 7

A10 ASSY

CIRCUIT NUMBER	SCHEM LOCATION	BOARD LOCATION
DS140B6	7C	NONE
DS14087	8C	NONE

CHASSIS MOUNTED PARTS

CIRCUIT NUMBER	SCHEM LOCATION	BOARD LOCATION
DS17105	6B	CHASSIS
F14500	6A	CHASSIS
P4086	7C	CHASSIS
P14500	6A	CHASSIS
Q1490	BD	CHASSIS
Q4102	6G	CHASSIS
Q4301	1G	CHASSIS
Q4312	5G	CHASSIS
Q4401	4G	CHASSIS
R4195	8E	CHASSIS
S14500	4B	CHASSIS
S14510	6A	CHASSIS
S14520	5A	CHASSIS
T14500	CA	CHASSIS

http://manoman.sqhill.com

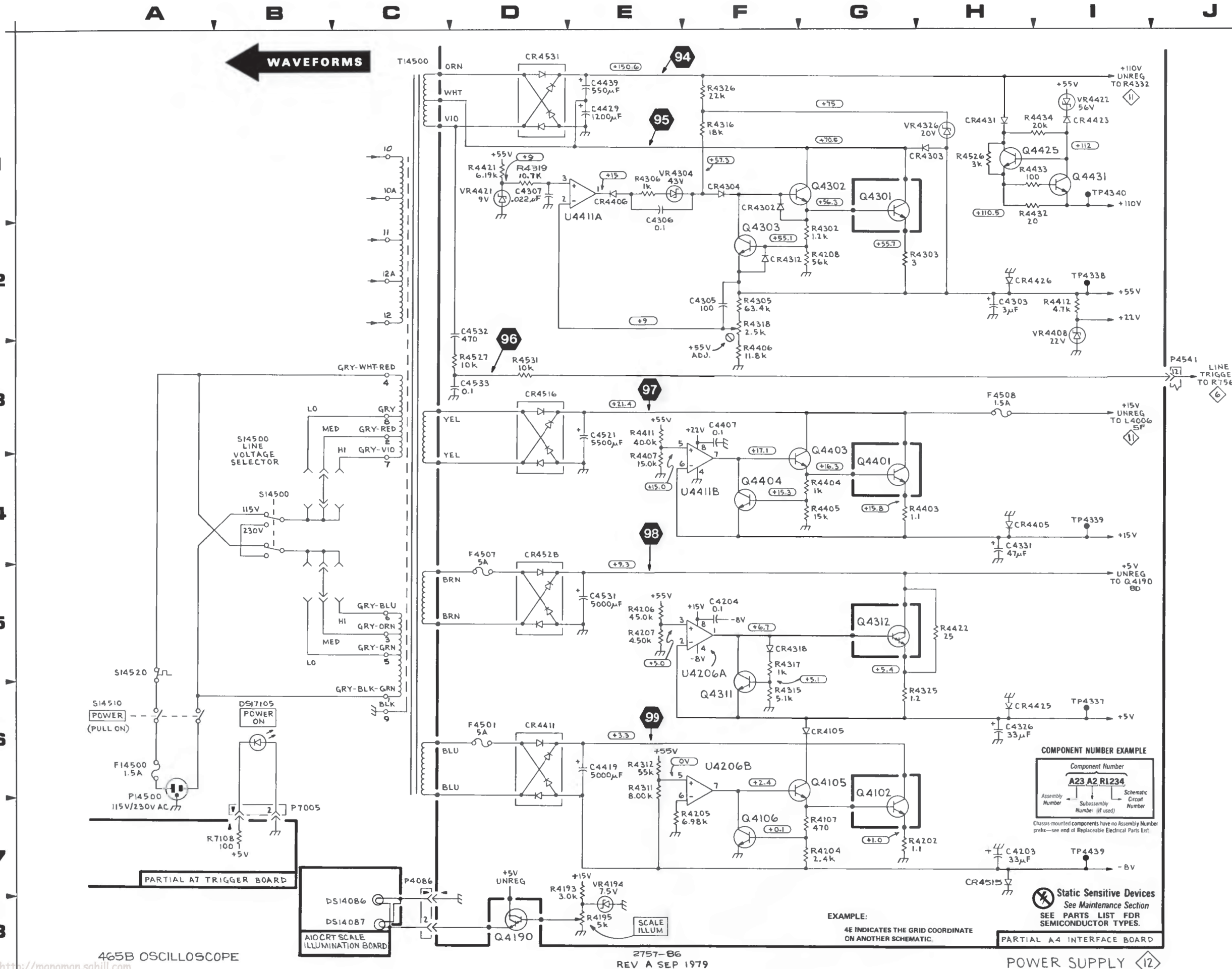

http://manoman.sqhill.com

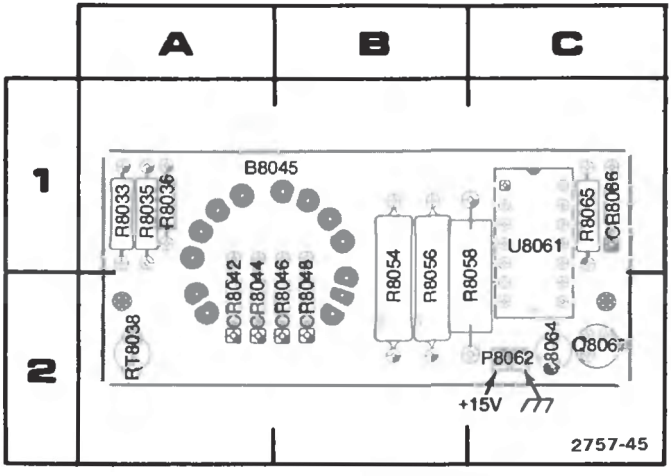

Figure 8-9. A8 Fan Circuit board.

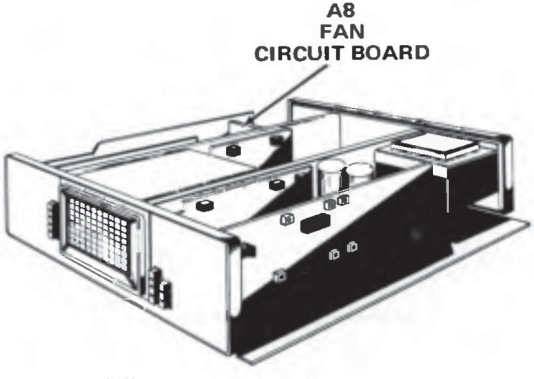

http://manoman.sqhill.com

465B CONTROL SETTINGS

DC Voltages

Remove Q1496 to make dc measurements in the Calibrator circuit.

AC Waveforms

Fan circuit waveform taken at 25°C ambient temperature.

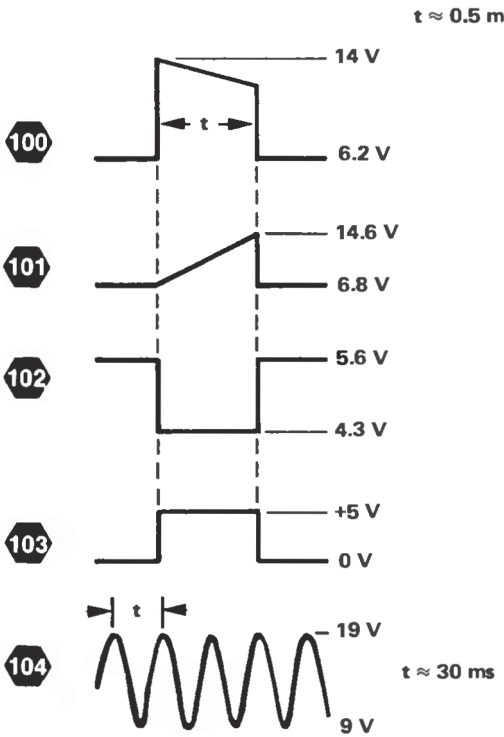

2757-109

http://manoman.sqhill.com

CALIBRATOR AND FAN
DIAGRAM 13

P/O A4 ASSY

CIRCUIT NUMBER	SCHEM LOCATION	BOARD LOCATION
C4187	3B	4K
C4192	4B	4L
C4291	5C	5L
C4292	4D	5L
CR4291	4C	5L
L4292	3D	5L
P4060	2E	1H
Q4182	3B	4K
Q4196	4C	4M
Q4291	5D	5L
R4184	4B	3K
R4185	3B	4K
R4186	3A	4K
R4191	3C	3L
R4291	5C	5L
R4293	5D	5M
R4294	5D	6L
R4295	6D	6L
TP4177	4A	4J
TP4178	3C	4J
W4183	4A	3K

P/O A4 ASSY also shown on diagrams 3, 4, 5, 7, 8, 9, 10, 11, and 12

P/O A8 ASSY

CIRCUIT NUMBER	SCHEM LOCATION	BOARD LOCATION
B8045	3F	1A
C8064	2I	2C
CR8042	5I	2A
CR8044	H	2A
CR8046	4I	2B
CR8048	5H	2B
CR8066	2I	1C
P8062	2F	2C
Q8067	2H	2C
R8033	5J	1A
RB035	5J	1A
R8036	6J	1A
R8054	3I	2B
R8056	3G	2B
R8058	6H	2C
R8065	4H	1C
RT8038	6J	2A
U8061A	5I	1C
U8061B	5F	1C
U8061C	5G	1C

CHASSIS MOUNTED PARTS

CIRCUIT NUMBER	SCHEM NUMBER	SCHEM LOCATION
C3042	1	2J
C3042	2	2J
C13010	1	2A
C13010	2	2A
C13012	1	2A
C13012	2	2A
C15101	4	2A
C15101	4	7A
C15103	4	2A
C15103	4	7A
CR14498	9	3H
DL11405	3	1M
DS9040	4	2F
DS9040	4	7F
DS9060	4	2G
DS9060	4	7G
DS14086	12	7C
DS14087	12	8C
DS15034	4	1F
DS15036	4	9C
DS15038	4	7F
DS16001	10	8C
DS16002	9	1E
DS17105	12	6B
DS17127	7	5K
DS17206	7	5K
F14500	12	6A
J4387	8	2J
J13010	1	2A
J13010	2	2A
L14165	11	4L
L14176	11	2L
P4058	8	4J
P4086	12	7C
P4498	8	3J
P14325	11	5A
P14500	12	6A
Q4190	12	8D
Q4102	12	6G
Q4301	12	1G
Q4312	12	5G
Q4401	12	4G
Q14009	11	8F
R3042	1	2J
R3042	2	2J
R3045	1	2J
R3045	2	2K
R4059A	11	2B
R4059B	11	4J
R4132	11	5J
R4178	11	4M
R4179	11	2M
R4195	12	8E
R13010	1	2A
R13010	2	2A
R14288A	10	6A
R14288B	10	6A
R14398	7	4A
R14498	8	3J
R14498	9	2H
R15102	4	2A
R15102	4	7A
R16002	7	BA
S1285	4	1F
S1782	4	8F
S4075	11	1C
S6111A	11	4A
S7112D	6	1M
S14498	7	5A
S14498	8	1N
S14498	9	2H
S14500	12	4B
S14510	12	6A
S14520	12	5A
S17010	6	3F
T14500	12	CA

http://manoman.sqhill.com

WAVEFORMS

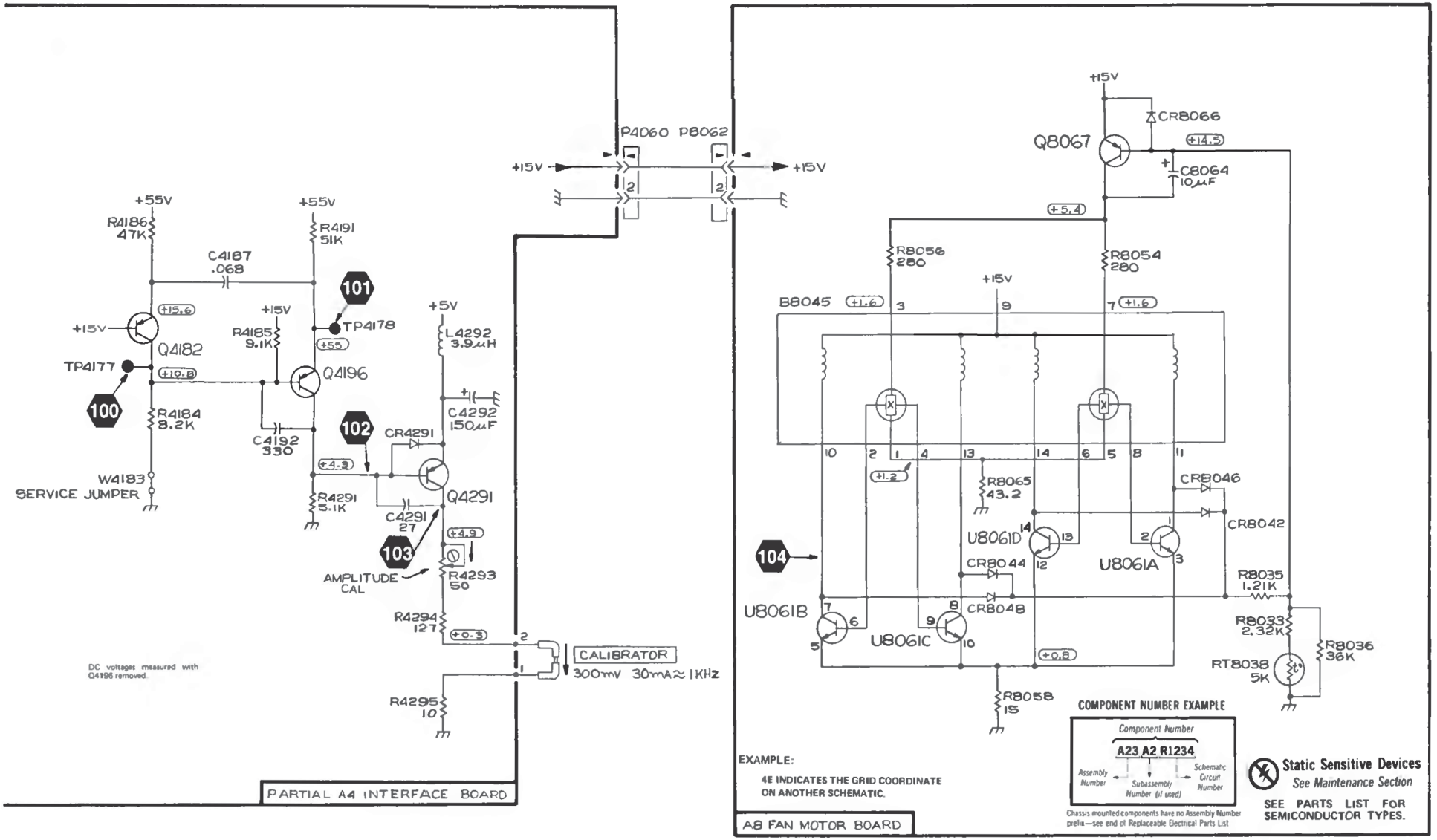

http://manoman.sqhill.com

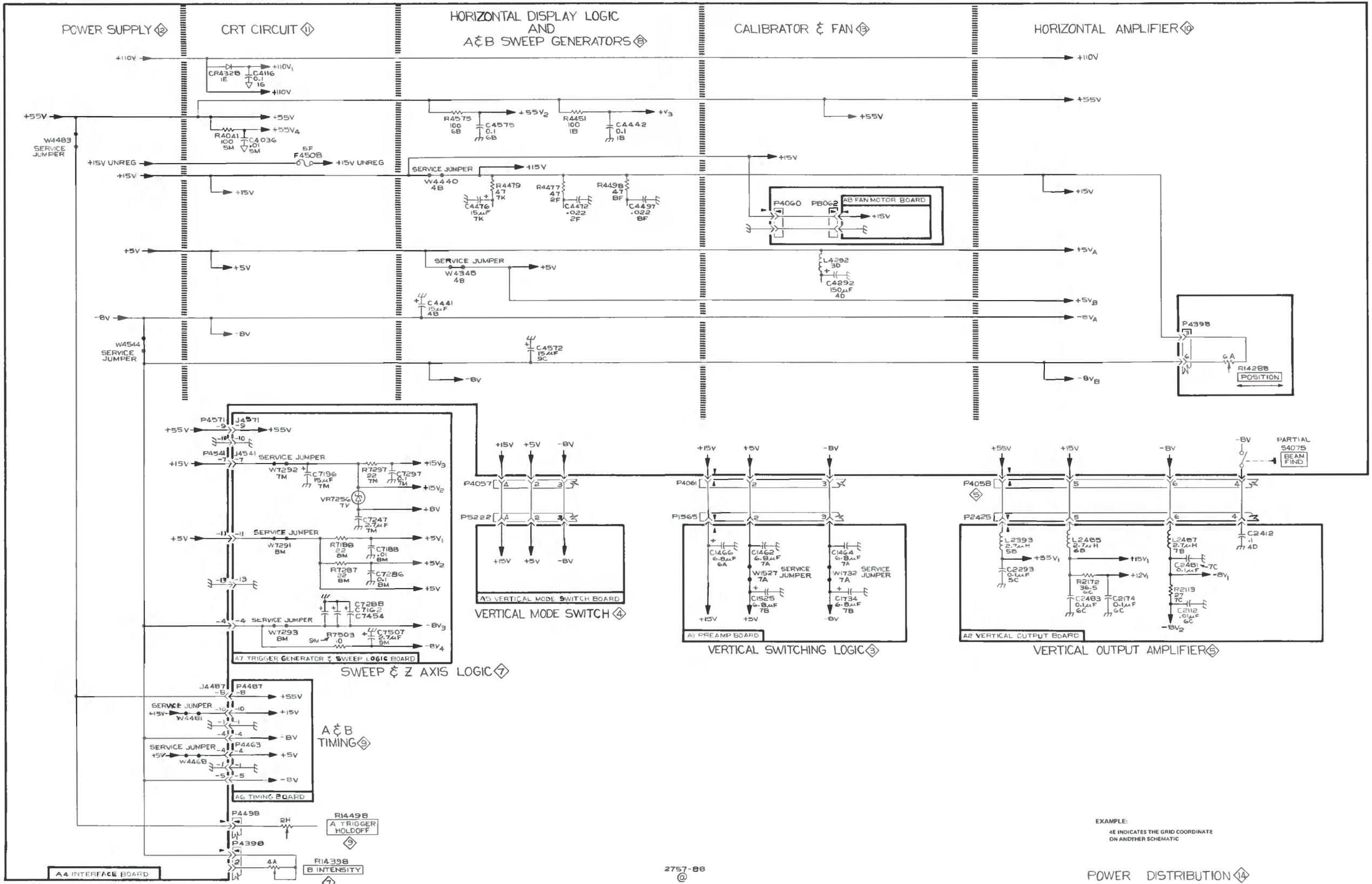
POWER SUPPLY 12
CRT CIRCUIT 11
HORIZONTAL DISPLAY LOGIC AND A&B SWEEP GENERATORS 8
CALIBRATOR & FAN 13
HORIZONTAL AMPLIFIER 10
+110V
+55V
+15V UNREG
+15V
+5V
-8V
W4483 SERVICE JUMPER
W4544 SERVICE JUMPER
CR4328 1E
C4116 0.1 1G
R4041 100 5M
C4036 .01 5M
F450B
R4575 100 6B
C4575 0.1 6B
R4451 100 1B
C4442 0.1 1B
SERVICE JUMPER
W4440 4B
R4479 47 7K
C4476 15µF 7K
R4477 47 2F
C4472 .022 2F
R4498 47 8F
C4497 .022 8F
P4060
PB062
AB FAN MOTOR BOARD
L4292 3D
C4292 150µF 4D
W4348 4B
C4441 15µF 4B
C4572 15µF 9C
P4398
R14288 POSITION
P4571
J4571
P4541
J4541
W7292 7M
C7196 15µF 7M
R7297 22 7M
C7297 0.1 7M
VR7256 7V
C7247 2.7µF 7M
W7291 8M
R7188 22 8M
C7188 .01 8M
R7287 22 8M
C7286 0.1 8M
C7288 C7162 C7454
W7293 8M
R7503 10 9M
C7507 2.7µF 9M
A7 TRIGGER GENERATOR & SWEEP LOGIC BOARD
SWEEP & Z AXIS LOGIC 7
P4057
P5222
A5 VERTICAL MODE SWITCH BOARD
VERTICAL MODE SWITCH 4
P4061
P1565
C1466 6.8µF 6A
C1462 6.8µF 7A
W1527 7A
C1525 6.8µF 7B
C1464 6.8µF 7A
W1732 7A
C1734 6.8µF 7B
A1 PREAMP BOARD
VERTICAL SWITCHING LOGIC 3
PARTIAL S4075 BEAM FIND
P4058
P2425
L2393 2.7µH 5B
C2293 0.1µF 5C
L2485 2.7µH 6B
R2172 36.5 6C
C2483 0.1µF 6C
C2174 0.1µF 6C
L2487 2.7µH 7B
C2481 0.1µF 7C
R2113 27 7C
C2112 .01µF 6C
C2412 .1 4D
A2 VERTICAL OUTPUT BOARD
VERTICAL OUTPUT AMPLIFIER 5
J4487
P4487
W4481
P4463
W4468
A6 TIMING BOARD
A&B TIMING 9
P4498
R14498 A TRIGGER HOLDOFF 9
P4398
R14398 B INTENSITY 7
A4 INTERFACE BOARD
EXAMPLE:
4E INDICATES THE GRID COORDINATE ON ANOTHER SCHEMATIC
2757-88
POWER DISTRIBUTION 14

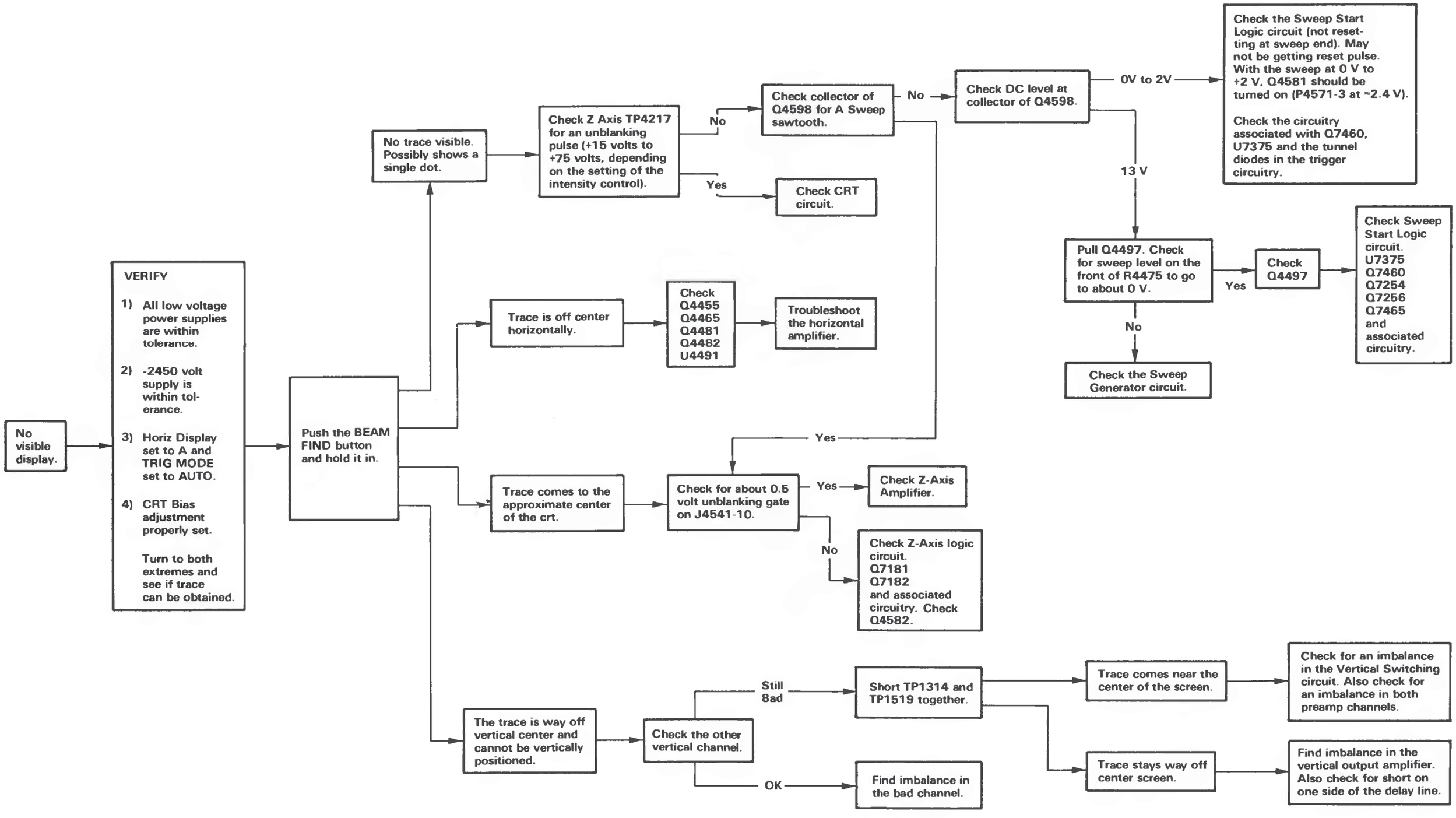

2757-55

http://manoman.sqhill.com

NO VISIBLE DISPLAY TROUBLESHOOTING

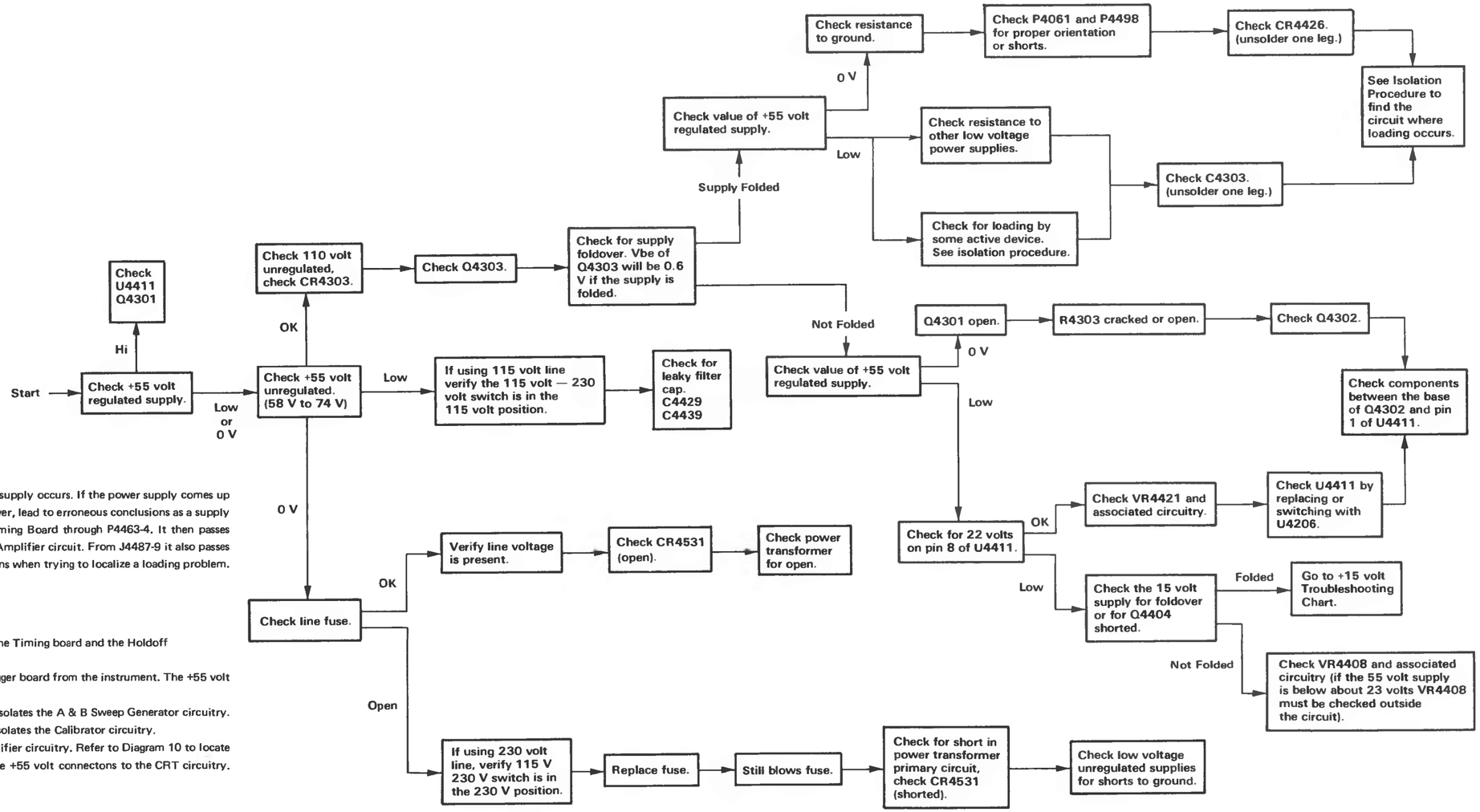

POWER SUPPLY ISOLATION PROCEDURE

The following procedure is used as an aid in localizing the area in which loading of a power supply occurs. If the power supply comes up after isolating a circuit, it is very probable the problem is in that circuit. This can sometimes, however, lead to erroneous conclusions as a supply may pass through one circuit to another circuit. For instance, the +5 volt supply enters the Timing Board through P4463-4. It then passes through the timing switch (in the X-Y position only) and J4487-9 to CR4285 in the Horizontel Amplifier circuit. From J4487-9 it also passes through P4571-4 to the sweep control IC on the Trigger Board. Watch for these types of conditions when trying to localize a loading problem.

+56 Volt Supply

1. Unsolder service jumper W4483 from the Interface board (see Figure 8-7). This isolates the Timing board and the Holdoff potentiometer.
2. To isolate the Trigger board from the +55 volt supply, is is necessary to remove the Trigger board from the instrument. The +55 volt supply connects to the Trigger board through P44751-9.
3. Unsolder one end of R4451 and R4575 on the Interface board (see Figure 8-7). This isolates the A & B Sweep Generator circuitry.
4. Unsolder one end of R4186 and R4191 from the Interface board (see Figure 8-7). This isolates the Calibrator circuitry.
5. If the +55 volt supply is still loaded, suspect the CRT circuitry, or the Horizontel Amplifier circuitry. Refer to Diagram 10 to locate +55 volt connections to the Horizontal Amplifier circuitry and to Diagram 11 to locate +55 volt connectons to the CRT circuitry.

2757-67

http://manoman.sghill.com

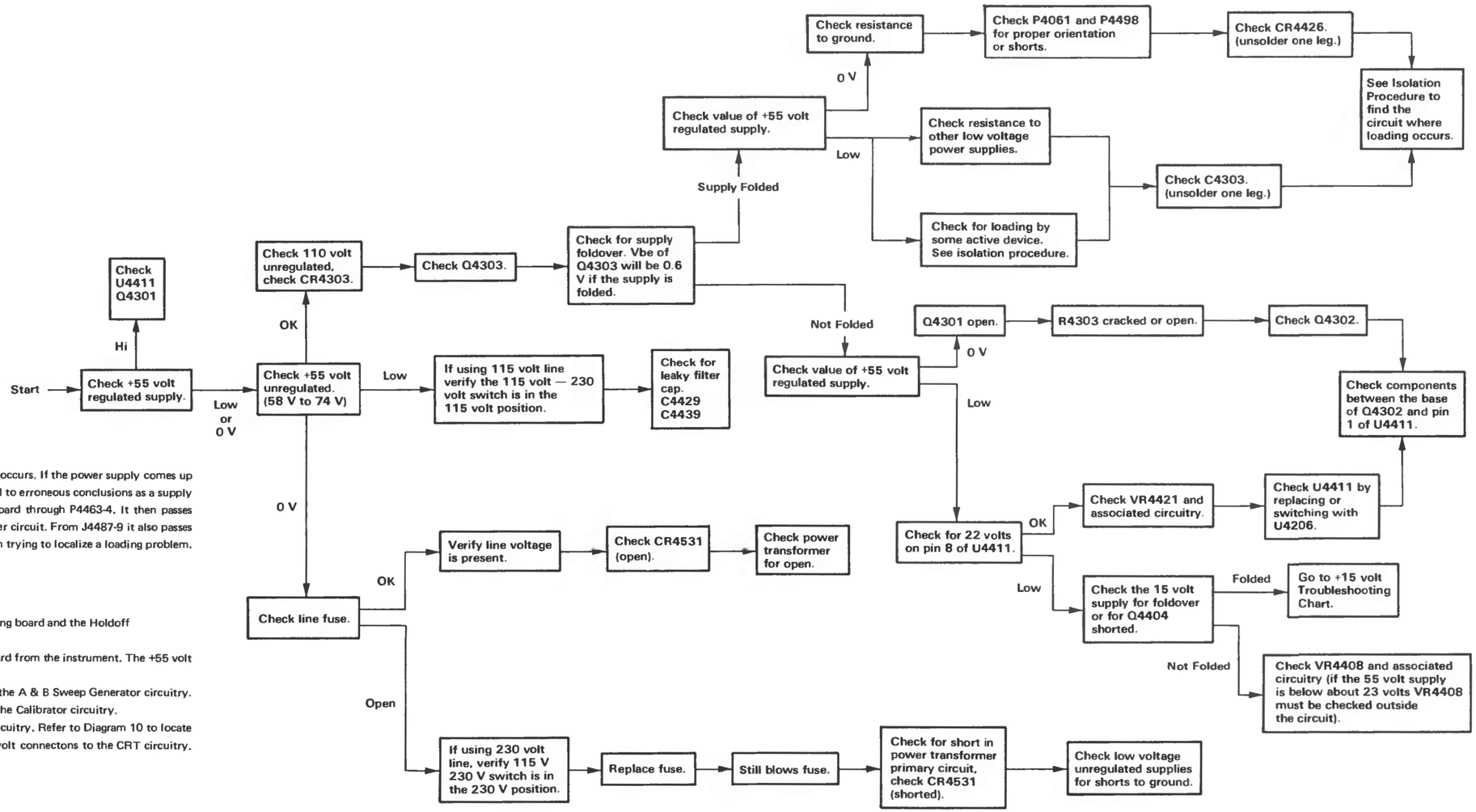

2757-67

POWER SUPPLY ISOLATION PROCEDURE

The following procedure is used as an aid in localizing the area in which loading of a power supply occurs. If the power supply comes up after isolating a circuit, it is very probable the problem is in that circuit. This can sometimes, however, lead to erroneous conclusions as a supply may pass through one circuit to another circuit. For instance, the +5 volt supply enters the Timing Board through P4463-4. It then passes through the timing switch (in the X-Y position only) and J4487-9 to CR4285 in the Horizontel Amplifier circuit. From J4487-9 it also passes through P4571-4 to the sweep control IC on the Trigger Board. Watch for these types of conditions when trying to localize a loading problem.

+56 Volt Supply

1. Unsolder service jumper W4483 from the Interface board (see Figure 8-7). This isolates the Timing board and the Holdoff potentiometer.
2. To isolate the Trigger board from the +55 volt supply, is is necessary to remove the Trigger board from the instrument. The +55 volt supply connects to the Trigger board through P44751-9.
3. Unsolder one end of R4451 and R4575 on the Interface board (see Figure 8-7). This isolates the A & B Sweep Generator circuitry.
4. Unsolder one end of R4186 and R4191 from the Interface board (see Figure 8-7). This isolates the Calibrator circuitry.
5. If the +55 volt supply is still loaded, suspect the CRT circuitry, or the Horizontel Amplifier circuitry. Refer to Diagram 10 to locate +55 volt connections to the Horizontal Amplifier circuitry and to Diagram 11 to locate +55 volt connectons to the CRT circuitry.

http://manoman.sghill.com

POWER SUPPLY ISOLATION PROCEDURE

The following procedure is used as an aid in localizing the area in which loading of a power supply occurs. If the power supply comes up after isolating a circuit, it is very probable the problem is in that circuit. This can sometimes, however, lead to erroneous conclusions as a supply may pass through one circuit to another circuit. For instance, the +5 volt supply enters the Timing Board through P4463-4. It then passes through the timing switch (in the X-Y position only) and J44B7-9 to CR4285 in the Horizontal Amplifier circuit. From J4487-9 it also passes through P4571-4 to the sweep control IC on the Trigger Board. Watch for these types of conditions when trying to localize a loading problem.

+15 Volt Supply

1. Pull P4061 from the Interface board. This isolates the Vertical Preamplifier board.
2. Pull P4060 from the Interface board. This isolates the Fan Motor circuit.
3. Pull P4057 from the Interface board. This isolates the Vertical Mode board.
4. Pull P4058 from the Interface board. This isolates the Vertical Output board.
5. Pull P4398 from the Interface board. This isolates the Horizontal POSITION potentiometers.
6. Unsolder service jumper W7292 on the Trigger board (see Figure 8-6). This isolates the Trigger board.
7. Unsolder service jumper W44B1 from the Timing board (see Figure 8-8). This isolates the Timing board.
8. Unsolder service jumper W4440 on the Interface board (see Figure 8-8). This isolates the A & B Sweep Generator circuitry and the Horizontal Amplifier circuitry.
9. If the +15 volt supply is still losaded, suspect the CRT circuitry (Z-Axis Amplifier). Refer to Diagram 11 to locate +15 volt connection to the CRT circuitry.

+5 Volt Supply

1. Pull P4061 from the Interface board. This isolates the Vertical Preamplifier board.
2. Pull P4057 from the Interface board. This isolates the Vertical Mode board.
3. Pull P4058 from the Interface board. This isolates the Vertical Output board.
4. Pull P4498 from the Interface board. This isolates the HOLDOFF potentiometer.
5. Unsolder service jumper W4468 from the Interface board (see Figure 8-7). This isolates the Timing board.
6. Unsolder service jumper W7291 from the Trigger board (see Figure 8-6). This isolates the Trigger board.
7. Unsolder service jumper W4348 from the Interface board (see Figure 8-7). This isolates the A & 8 Sweep Generator circuitry and part of the Horizontal Amplifier circuitry.
8. Unsolder one end of R4158 and R4263 from the Interface board (see Figure 8-7). This isolates the rest of the Horizontal Amplifier circuitry.
9. Unsolder L4292 from the Interface board (see Figure 8-7). This isolates the Calibrator circuitry.
10. If the +5 volt supply is still loaded, the CRT circuitry should be suspected. Refer to Diagram 11 to locate +5 volt connections to the CRT circuitry.

–8 Volt Supply

1. Pull P4061 from the Interface board. This isolates the Vertical Preamplifier board.
2. Pull P4057 from the Interface board. This isolates the Vertical Mode board.
3. Pull P4058 from the Interface board. This isolates the Vertical Output Amplifier board.
4. Pull P4398 from the Interface board. This isolates the Horizontal POSITION and B INTENSITY potentiometers.
5. Unsolder service jumper W7293 from the Trigger board to isolate part of the Trigger board. Unsolder one end of R7503 from the Trigger board to isolate the rest of the Trigger board (see Figure 8-6).
6. Unsolder service jumper W4544 from the Interface board (see Figure 8-7). This isolates the Timing board, A & B Sweep Generator circuitry, and part of the Horizontal Amplifier circuitry. It will also completely remove the –8 volts from the Trigger board if step 5 is not done.
7. Check C4441 for a short or leakage.
8. If the –8 volts supply is still loaded, suspect the CRT circuitry (Z-Axis Amplifier), or the Horizontal Amplifier circuitry. Refer to Diagram 10 for the –8 volt connections to the Horizontal Amplifier circuitry and to Diagram 11 for the –8 volt contections to the CRT circuitry.

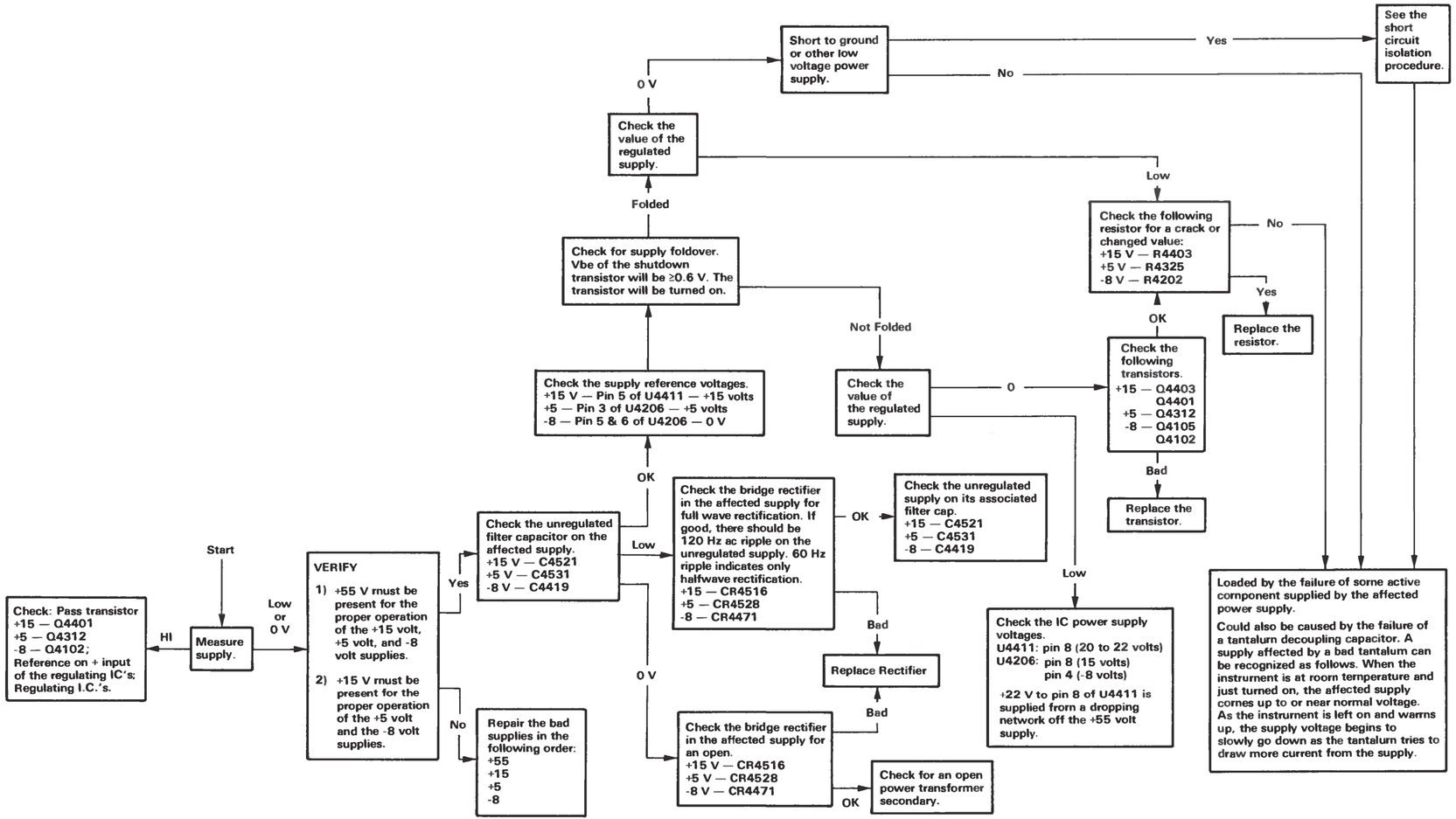

2757-52

http://manoman.sqhill.com

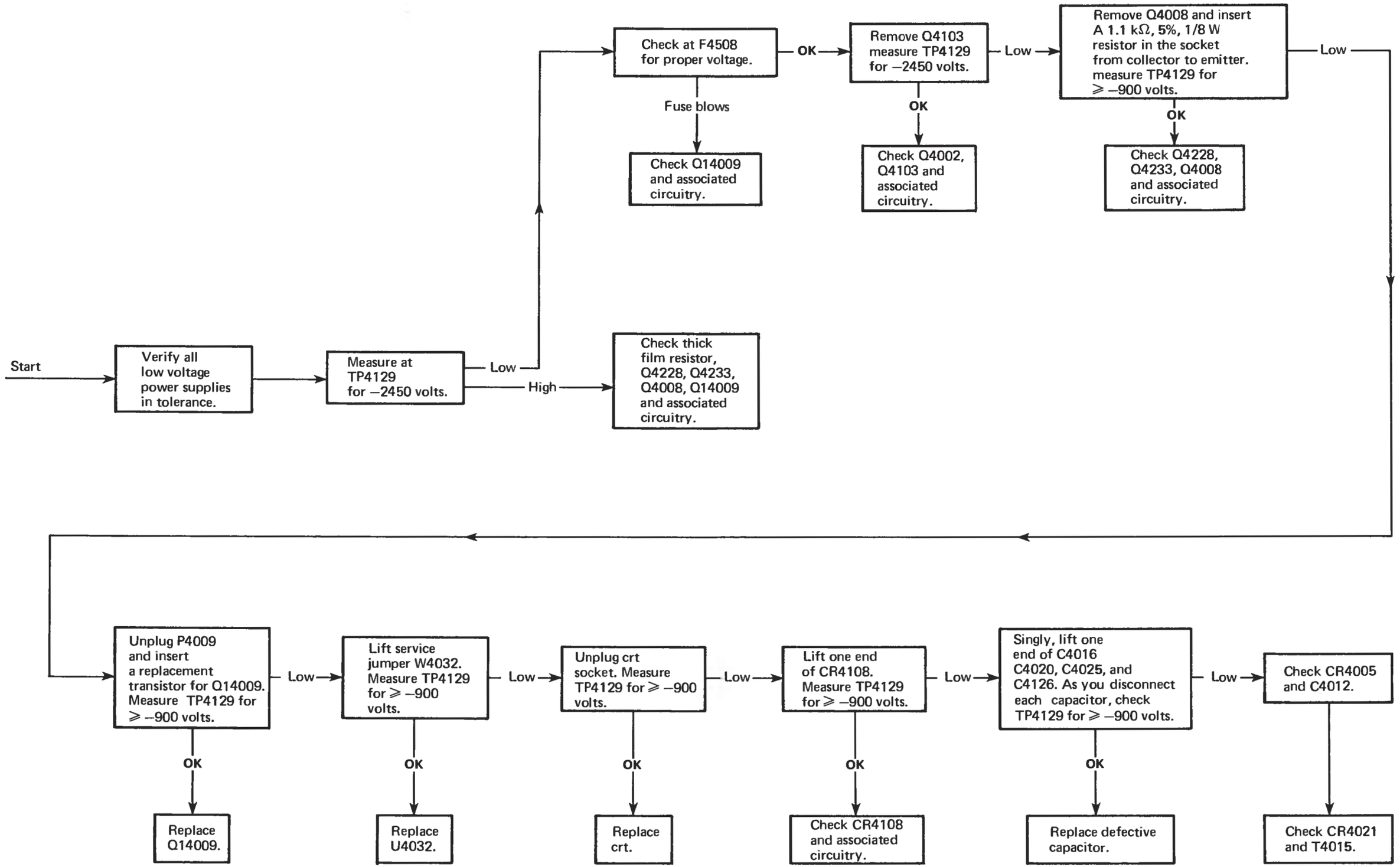

−2450 V SUPPLY TROUBLESHOOTING 2757-71

http://manoman.sqhill.com

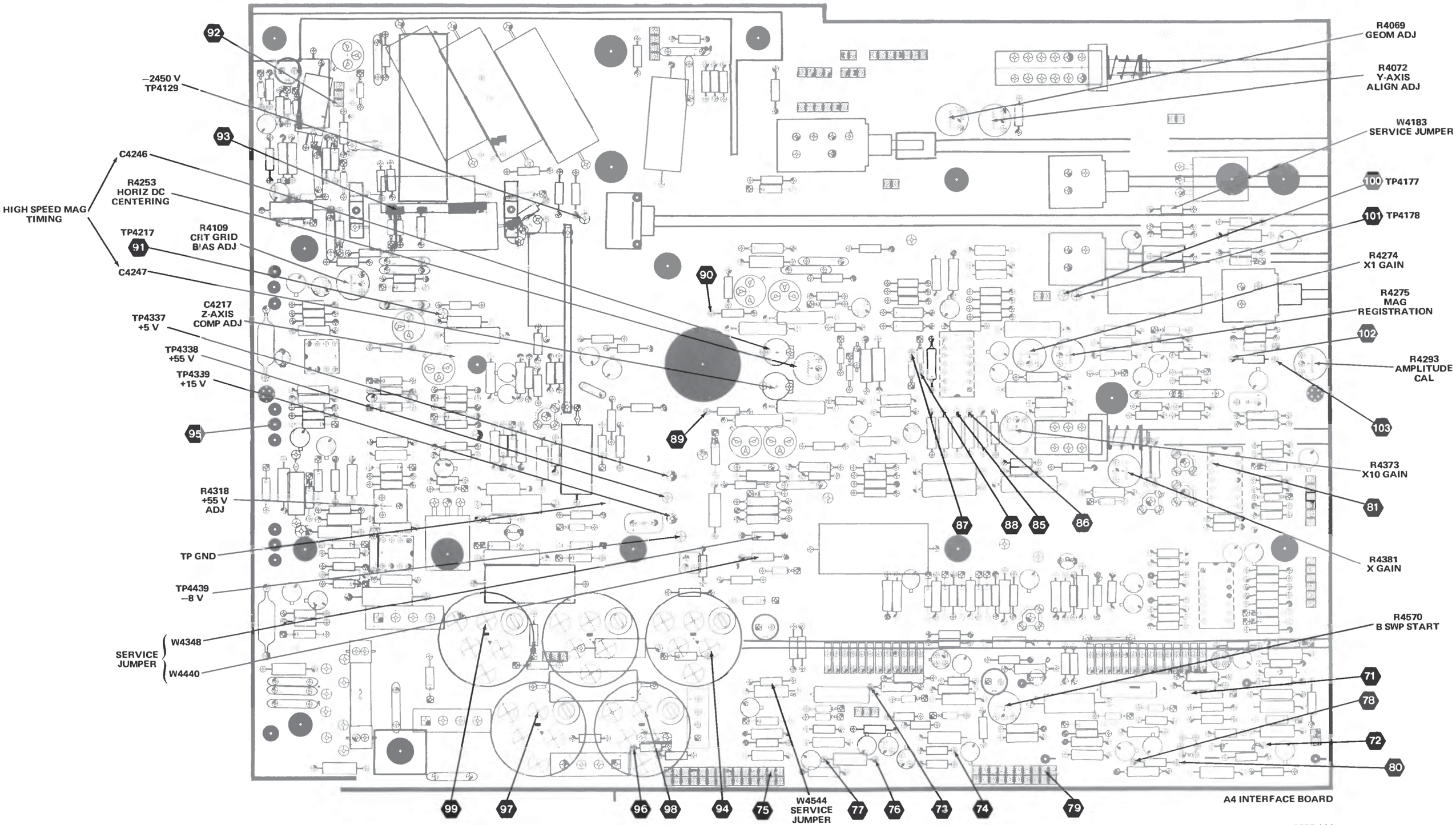

2757-111

Figure 8-10. Interface circuit board adjustment locations.

http://manoman.sqhill.com

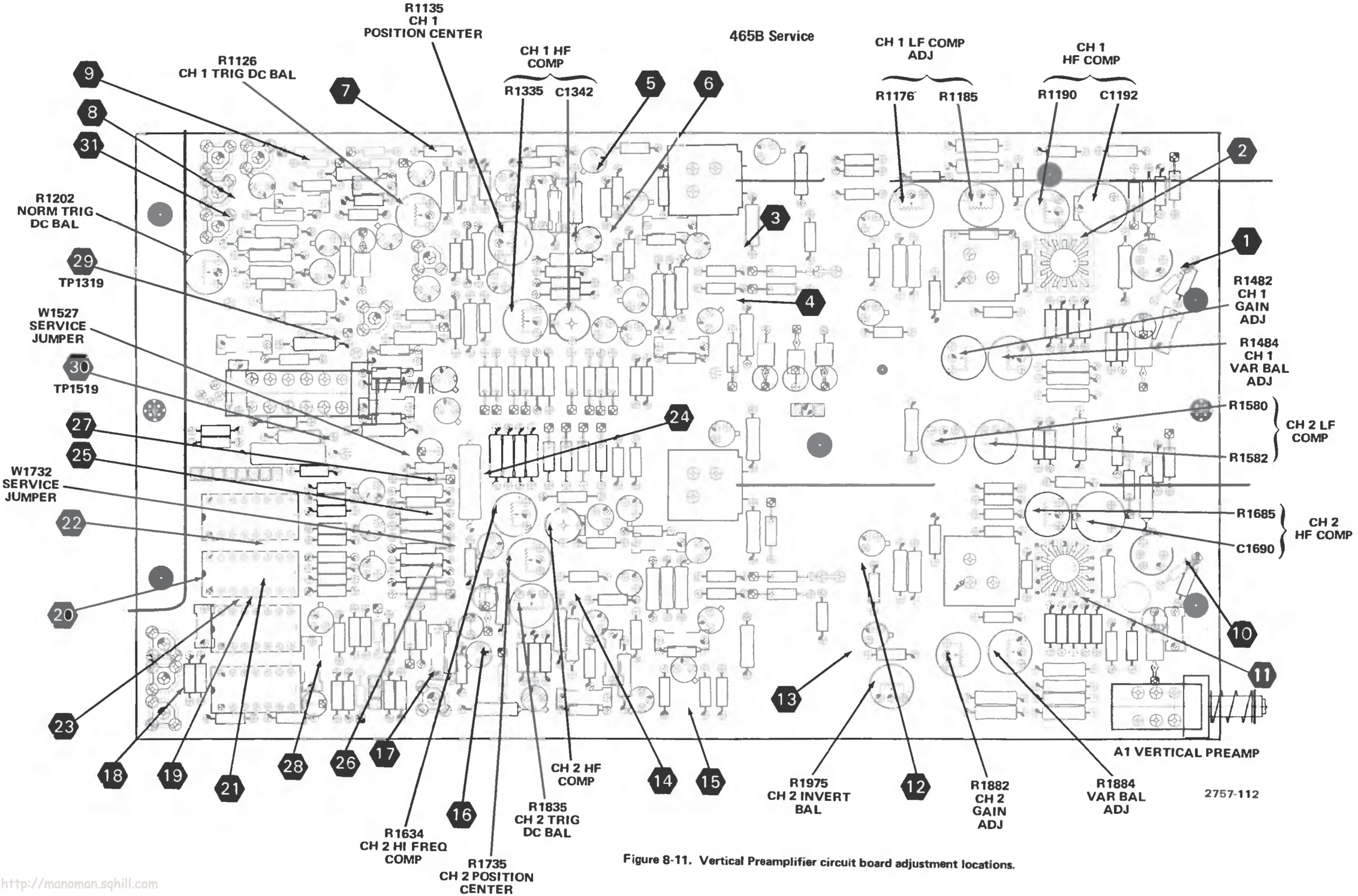

Figure 8-11. Vertical Preamplifier circuit board adjustment locations.

http://manoman.sqhill.com

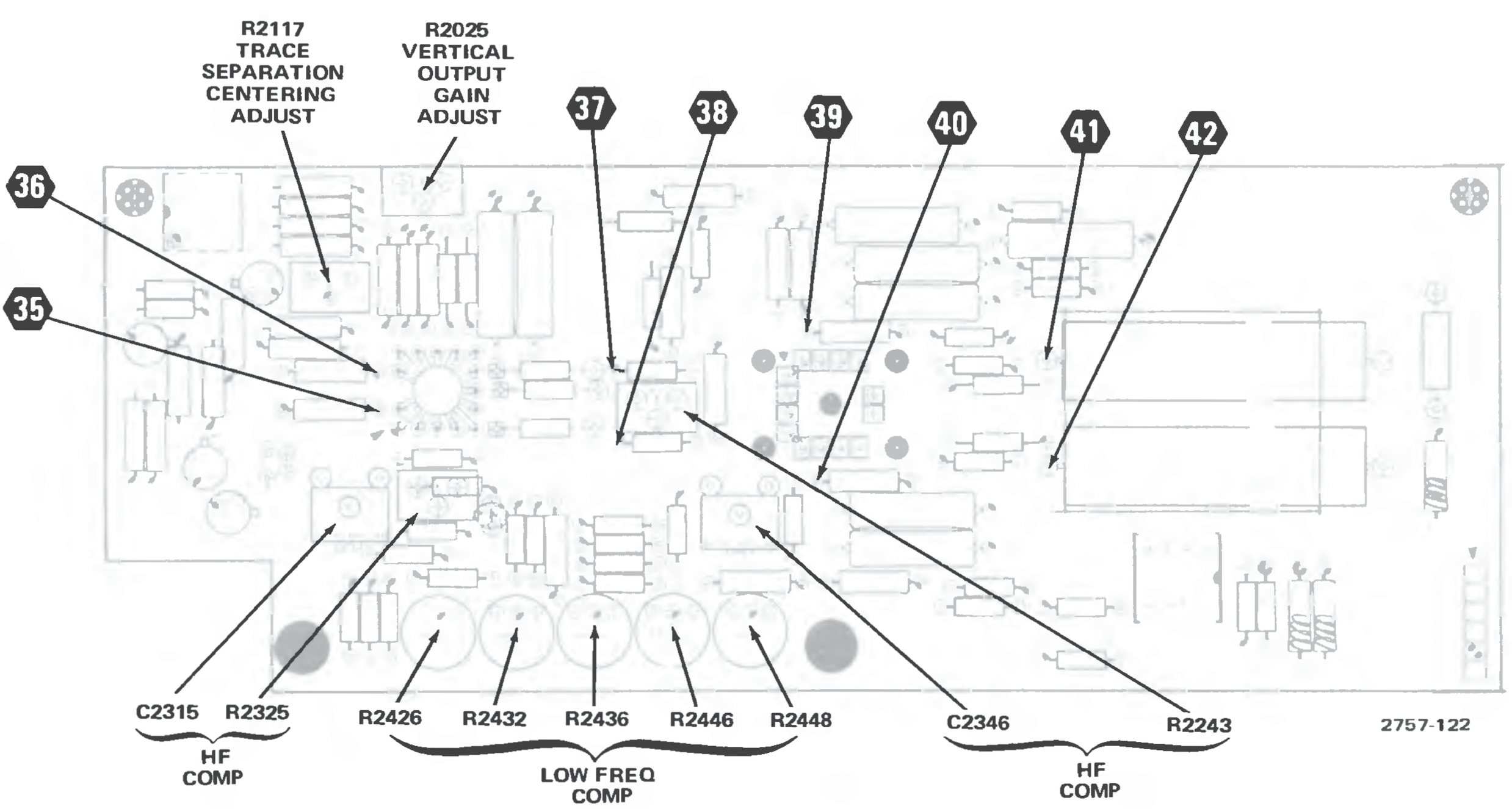

Figure 8-12A. A2 Vertical Output Amplifier circuit board adjustment locations (SN B030000 & up).

Figure 8-12B. Vertical Output Amplifier circuit board adjustment locations below SN B030000.

http://manoman.sghill.com

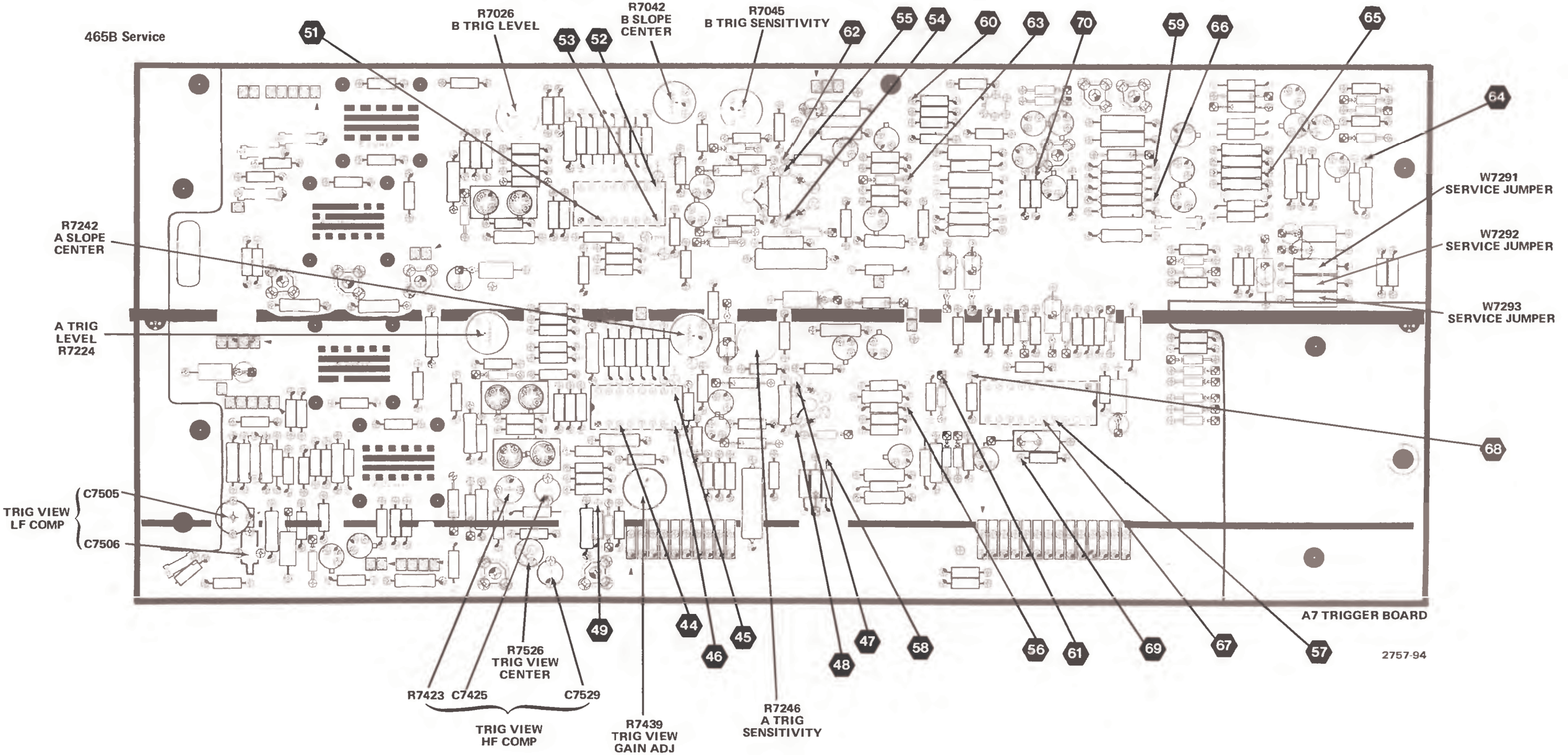

Figure 8-13. Trigger Generator and Sweep Logic circuit board adjustment locations.

http://manoman.sqhill.com

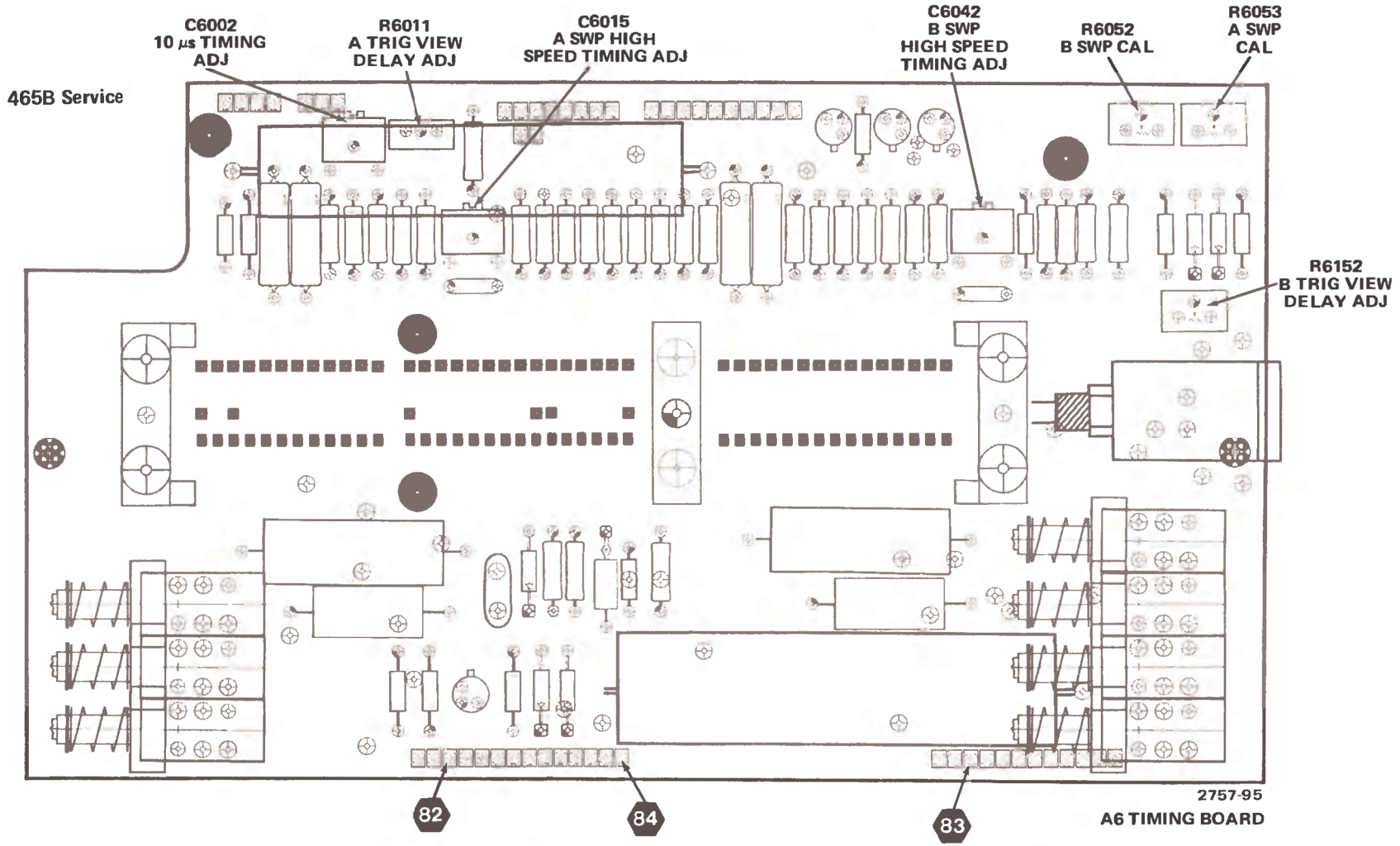

Figure 8-14. Timing circuit board adjustment locations.

http://manoman.sqhill.com

REPLACEABLE MECHANICAL PARTS

PARTS ORDERING INFORMATION

Replacement parts are available from or through your local Tektronix, Inc. Field Office or representative.

Changes to Tektronix instruments are sometimes made to accommodate improved components as they become available, and to give you the benefit of the latest circuit improvements developed in our engineering department. It is therefore important, when ordering parts, to include the following information in your order: Part number, instrument type or number, serial number, and modification number if applicable.

If a part you have ordered has been replaced with a new or improved part, your local Tektronix, Inc. Field Office or representative will contact you concerning any change in part number.

Change information, if any, is located at the rear of this manual.

SPECIAL NOTES AND SYMBOLS

X000	Part first added at this serial number
00X	Part removed after this serial number

FIGURE AND INDEX NUMBERS

Items in this section are referenced by figure and index numbers to the illustrations.

INDENTATION SYSTEM

This mechanical parts list is indented to indicate item relationships. Following is an example of the indentation system used in the description column.

```
1 2 3 4 5                    Name & Description

Assembly and/or Component
Attaching parts for Assembly and/or Component
                - - - * - - -
  Detail Part of Assembly and/or Component
  Attaching parts for Detail Part
                - - - * - - -
    Parts of Detail Part
    Attaching parts for Parts of Detail Part
                - - - * - - -
```

Attaching Parts always appear in the same indentation as the item it mounts, while the detail parts are indented to the right. Indented items are part of, and included with, the next higher indentation. The separation symbol - - - * - - - indicates the end of attaching parts.

Attaching parts must be purchased separately, unless otherwise specified.

ITEM NAME

In the Parts List, an Item Name is separated from the description by a colon (:). Because of space limitations, an Item Name may sometimes appear as incomplete. For further Item Name identification, the U.S. Federal Cataloging Handbook H6-1 can be utilized where possible.

ABBREVIATIONS

"	INCH
#	NUMBER SIZE
ACTR	ACTUATOR
ADPTR	ADAPTER
ALIGN	ALIGNMENT
AL	ALUMINUM
ASSEM	ASSEMBLED
ASSY	ASSEMBLY
ATTEN	ATTENUATOR
AWG	AMERICAN WIRE GAGE
BD	BOARD
BRKT	BRACKET
BRS	BRASS
BRZ	BRONZE
BSHG	BUSHING
CAB	CABINET
CAP	CAPACITOR
CER	CERAMIC
CHAS	CHASSIS
CKT	CIRCUIT
COMP	COMPOSITION
CONN	CONNECTOR
COV	COVER
CPLG	COUPLING
CRT	CATHODE RAY TUBE
DEG	DEGREE
DWR	DRAWER
ELCTRN	ELECTRON
ELEC	ELECTRICAL
ELCTLT	ELECTROLYTIC
ELEM	ELEMENT
EPL	ELECTRICAL PARTS LIST
EQPT	EQUIPMENT
EXT	EXTERNAL
FIL	FILLISTER HEAD
FLEX	FLEXIBLE
FLH	FLAT HEAD
FLTR	FILTER
FR	FRAME or FRONT
FSTNR	FASTENER
FT	FOOT
FXD	FIXED
GSKT	GASKET
HDL	HANDLE
HEX	HEXAGON
HEX HD	HEXAGONAL HEAD
HEX SOC	HEXAGONAL SOCKET
HLCPS	HELICAL COMPRESSION
HLEXT	HELICAL EXTENSION
HV	HIGH VOLTAGE
IC	INTEGRATED CIRCUIT
ID	INSIDE DIAMETER
IDENT	IDENTIFICATION
IMPLR	IMPELLER
IN	INCH
INCAND	INCANDESCENT
INSUL	INSULATOR
INTL	INTERNAL
LPHLDR	LAMPHOLDER
MACH	MACHINE
MECH	MECHANICAL
MTG	MOUNTING
NIP	NIPPLE
NON WIRE	NOT WIRE WOUND
OBD	ORDER BY DESCRIPTION
OD	OUTSIDE DIAMETER
OVH	OVAL HEAD
PH BRZ	PHOSPHOR BRONZE
PL	PLAIN or PLATE
PLSTC	PLASTIC
PN	PART NUMBER
PNH	PAN HEAD
PWR	POWER
RCPT	RECEPTACLE
RES	RESISTOR
RGD	RIGID
RLF	RELIEF
RTNR	RETAINER
SCH	SOCKET HEAD
SCOPE	OSCILLOSCOPE
SCR	SCREW
SE	SINGLE END
SECT	SECTION
SEMICOND	SEMICONDUCTOR
SHLD	SHIELD
SHLDR	SHOULDERED
SKT	SOCKET
SL	SLIDE
SLFLKG	SELF-LOCKING
SLVG	SLEEVING
SPR	SPRING
SQ	SQUARE
SST	STAINLESS STEEL
STL	STEEL
SW	SWITCH
T	TUBE
TERM	TERMINAL
THD	THREAD
THK	THICK
TNSN	TENSION
TPG	TAPPING
TRH	TRUSS HEAD
V	VOLTAGE
VAR	VARIABLE
W/	WITH
WSHR	WASHER
XFMR	TRANSFORMER
XSTR	TRANSISTOR

http://manoman.sqhill.com

CROSS INDEX—MFR. CODE NUMBER TO MANUFACTURER

Mfr. Code	Manufacturer	Address	City, State, Zip
000BK	STAUFFER SUPPLY	105 SE TAYLOR	PORTLAND, OR 97214
000CY	NORTHWEST FASTENER SALES, INC.	7923 SW CIRRUS DRIVE	BEAVERTON, OREGON 97005
000EX	O'HARA METAL PRODUCT COMPANY	542 BRANNAN STREET	SAN FRANCISCO, CA 94107
000GE	SCREWMATIC INC.	925 WEST FIRST ST.	AZUZA, CA 91702
000GF	DUDEK & BOCK SPRING MFG CO.	5100 W ROOSEVELT RD.	CHICAGO, IL 60650
00779	AMP, INC.	P O BOX 3608	HARRISBURG, PA 17105
01963	CHERRY ELECTRICAL PRODUCTS CORPORATION	3600 SUNSET AVENUE	WAUKEGAN, IL 60085
05006	TWENTIETH CENTURY PLASTICS, INC.	415 E WASHINGTON BLVD.	LOS ANGELES, CA 90015
05129	KILO ENGINEERING COMPANY	2015 D	LA VERNE, CA 91750
06540	AMATOM ELECTRONIC HARDWARE, DIV. OF MITE CORP.	446 BLAKE ST.	NEW HAVEN, CT 06515
06666	GENERAL DEVICES CO., INC.	525 S. WEBSTER AVE.	INDIANAPOLIS, IN 46219
07700	TECHNICAL WIRE AND PRODUCTS, INC.	129 DERMODY ST.	CRANFORD, NJ 07016
08261	SPECTRA-STRIP CORP.	7100 LAMPSON AVE.	GARDEN GROVE, CA 92642
08530	RELIANCE MICA CORP.	342-39TH ST.	BROOKLYN, NY 11232
12014	CHICAGO RIVET AND MACHINE CO.	950 S. 25TH AVENUE	BELLWOOD, IL 60104
12327	FREEWAY CORPORATION	9301 ALLEN DRIVE	CLEVELAND, OH 44125
12360	ALBANY PRODUCTS CO., DIV. OF PNEUMO DYNAMICS CORPORATION	145 WOODWARD AVENUE	SOUTH NORWALK, CT 06586
13511	AMPHENOL CARDRE DIV., BUNKER RAMO CORP.		LOS GATOS, CA 95030
16428	BELDEN CORP.	P. O. BOX 1331	RICHMOND, IN 47374
22526	BERG ELECTRONICS, INC.	YOUK EXPRESSWAY	NEW CUMBERLAND, PA 17070
23050	PRODUCT COMPONENTS CORP	30 LORRAINE AVE.	MT VERNON, NY 10553
24011	ELECTRONIZED CHEMICALS CORPORATION	S BEDFORD STREET	BURLINGTON, MA 01803
24931	SPECIALITY CONNECTOR CO., INC.	2620 ENDRESS PLACE	GREENWOOD, IN 46142
26233	USM CORP NYLOC FASTENER DIV.	1501 W SEPULVEDA BLVD. P.O. BOX 3158	TORRANCE, CA 90510
27143	ATLAS SPRING AND MFG. CO.	1805 N. SPAULDING AVE.	CHICAGO, IL 60647
28520	HEYMAN MFG. CO.	147 N. MICHIGAN AVE.	KENILWORTH, NJ 07033
28817	CAL-METEX CORP., SUBSIDIARY OF METEX CORP.	509 HINDRY AVE.	INGLEWOOD, CA 90301
42838	NATIONAL RIVET AND MFG. CO.	1-21 EAST JEFFERSON ST.	WAUPUN, WI 53963
46384	PENN ENGINEERING AND MFG. CORP.	P O BOX 311	DOYLESTOWN, PA 18901
51316	ANGELUS WASHER AND STAMPING CO.	1411 ESPERANZA ST.	LOS ANGELES, CA 90023
55210	GETTIG ENG. AND MFG. COMPANY	PO BOX 85, OFF ROUTE 45	SPRING MILLS, PA 16875
56878	STANDARD PRESSED STEEL COMPANY	BENSON EAST	JENKINTOWN, PA 19046
57771	STIMPSON, EDWIN B., CO., INC.	900 SYLVAN AVENUE	BAYPORT, NY 11705
63743	WARD LEONARD ELECTRIC CO., INC.	31 SOUTH ST.	MOUNT VERNON, NY 10550
70278	ALLIED STEEL AND CONVEYORS, DIV. OF SPARTON CORP.	17333 HEALY	DETROIT, MI 48212
70485	ATLANTIC INDIA RUBBER WORKS, INC.	571 W. POLK ST.	CHICAGO, IL 60607
71159	BRISTOL SOCKET SCREW, DIV. OF AMERICAN CHAIN AND CABLE CO., INC.	P O BOX 2244, 40 BRISTOL ST.	WATERBURY, CT 06720
71279	CAMBRIDGE THERMIONIC CORP.	445 CONCORD AVE.	CAMBRIDGE, MA 02138
71400	BUSSMAN MFG., DIVISION OF MCGRAW-EDISON CO.	2536 W. UNIVERSITY ST.	ST. LOUIS, MO 63107
71590	CENTRALAB ELECTRONICS, DIV. OF GLOBE-UNION, INC.	P O BOX 858	FORT DODGE, IA 50501
71785	TRW, CINCH CONNECTORS	1501 MORSE AVENUE	ELK GROVE VILLAGE, IL 60007
73743	FISCHER SPECIAL MFG. CO.	446 MORGAN ST.	CINCINNATI, OH 45206
73803	TEXAS INSTRUMENTS, INC., METALLURGICAL MATERIALS DIV.	34 FOREST STREET	ATTLEBORO, MA 02703
74445	HOLO-KROME CO.	31 BROOK ST. WEST	HARTFORD, CT 06110
75497	LAMSON AND SESSIONS CO.	5000 TIEDEMAN ROAD	CLEVELAND, OH 44144
75915	LITTELFUSE, INC.	800 E. NORTHWEST HWY	DES PLAINES, IL 60016
77250	PHEOLL MANUFACTURING CO., DIVISION OF ALLIED PRODUCTS CORP.	5700 W. ROOSEVELT RD.	CHICAGO, IL 60650
78189	ILLINOIS TOOL WORKS, INC. SHAKEPROOF DIVISION	ST. CHARLES ROAD	ELGIN, IL 60120
79136	WALDES, KOHINOOR, INC.	47-16 AUSTEL PLACE	LONG ISLAND CITY, NY 11101
79807	WROUGHT WASHER MFG. CO.	2100 S. O BAY ST.	MILWAUKEE, WI 53207
80009	TEKTRONIX, INC.	P O BOX 500	BEAVERTON, OR 97077
80033	PRESTOLE EVERLOCK, INC.	P. O. BOX 278,1345 MIAMI ST.	TOLEDO, OH 43605
83385	CENTRAL SCREW CO.	2530 CRESCENT DR.	BROADVIEW, IL 60153
83486	ELCO INDUSTRIES, INC.	1103 SAMUELSON ROAD	ROCKFORD, IL 61101
86445	PENN FIBRE AND SPECIALTY CO., INC.	2032 E. WESTMORELAND ST.	PHILADELPHIA, PA 19134
86928	SEASTROM MFG. COMPANY, INC.	701 SONORA AVENUE	GLENDALE, CA 91201

http://manoman.sqhill.com

CROSS INDEX—MFR. CODE NUMBER TO MANUFACTURER

Mfr. Code	Manufacturer	Address	City, State, Zip
89663	REESE, J. RAMSEY, INC.	71 MURRAY STREET	NEW YORK, NY 10007
91260	CONNOR SPRING AND MFG. CO.	1729 JUNCTION AVE.	SAN JOSE, CA 95112
93907	CAMCAR SCREW AND MFG. CO.	600 18TH AVE.	ROCKFORD, IL 61101
95987	WECKESSER CO., INC.	4444 WEST IRVING PARK RD.	CHICAGO, IL 60641
97464	INDUSTRIAL RETAINING RING CO.	57 CORDIER ST.	IRVINGTON, NJ 07111

http://manoman.sqhill.com

Fig. & Index No.	Tektronix Part No.	Serial/Model No. Eff	Dscont	Qty	1 2 3 4 5	Name & Description	Mfr Code	Mfr Part Number
1-1	200-1411-00			1		RTNR,IMPLOSION:5.422 X 4.743X 0.441,GRAY	80009	200-1411-00
-2	213-0313-00			4		. THUMBSCREW:4-40 X 0.45 INCH,KNURLED	80009	213-0313-00
-3	337-1674-00			1		SHLD,ELCTRN TUB:CRT	80009	337-1674-00
-4	366-0494-00			5		KNOB:GRAY WITH SETSCREW	80009	366-0494-00
	213-0153-00			1		. SETSCREW:5-40 X 0.125,STL BK OXD,HEX	000CY	OBD
-5	366-1031-02			2		KNOB:RED,VAR,0.1271D X 0.392 OD	80009	366-1031-02
	213-0153-00			1		. SETSCREW:5-40 X 0.125,STL BK OXD,HEX	000CY	OBD
-6	366-1426-00			2		KNOB:GRAY	80009	366-1426-00
	213-0153-00			1		. SETSCREW:5-40 X 0.125,STL BK OXD,HEX	000CY	OBD
-7	366-0215-02			2		KNOB:LEVER SWITCH	80009	366-0215-02
-8	366-1559-00			16		PUSH BUTTON:SIL GY,0.18 SQ X 0.43	80009	366-1559-00
-9	366-0494-00			3		KNOB:GRAY WITH SETSCREW	80009	366-0494-00
	213-0153-00			1		. SETSCREW:5-40 X 0.125,STL BK OXD,HEX	000CY	OBD
-10	366-0494-00			1		KNOB:GRAY WITH SETSCREW	80009	366-0494-00
	213-0153-00			1		. SETSCREW:5-40 X 0.125,STL BK OXD,HEX	000CY	OBD
-11	331-0328-00			1		DIAL,CONTROL:10 TURN FOR 0.25 DIA SHAFT	05129	461-S-70
	213-0048-00			1		. SETSCREW:4-40 X 0.125 INCH,HEX SOC STL	74445	OBD
-12	366-1346-02			1		KNOB:RED	80009	366-1346-00
	213-0243-00			1		. SETSCREW:5-40 X 0.25 INCH,HEX SOC STL	70276	OBD
-13	366-1219-01			1		KNOB:GRAY--DLYD SWP	80009	366-1219-01
	213-0153-00			2		. SETSCREW:5-40 X 0.125,STL BK OXD,HEX	000CY	OBD
-14	354-0442-01			1		RING,KNOB SKIRT:CLEAR,1.45 OD	80009	354-0442-01
	213-0005-00			1		. SETSCREW:8-32 X 1.25 INCH,HEX SOC STL	74445	OBD
-15	401-0080-01			1		BRG,KNOB SKIRT:0.789 ID X 8.66"OD PLASTIC	80009	401-0080-01
-16	366-0494-00			3		KNOB:GRAY WITH SETSCREW	80009	366-0494-00
	213-0153-00			1		. SETSCREW:5-40 X 0.125,STL BK OXD,HEX	000CY	OBD
-17	366-1278-00			2		KNOB:GRAY	80009	366-1278-00
	213-0153-00			1		. SETSCREW:5-40 X 0.125,STL BK OXD,HEX	000CY	OBD
-18	366-1280-00			1		KNOB:GRAY	80009	366-1278-00
	213-0153-00			1		. SETSCREW:5-40 X 0.125,STL BK OXD,HEX	000CY	OBD
	366-0494-00			1		KNOB:GRAY WITH SETSCREW	80009	366-0494-00
	213-0246-00			1		. SETSCREW:5-40 X 0.093 ITL BK OXD,HEX SKT	71159	OBD
-19	426-1072-00			16		FRAME,PUSH BTN:PLASTIC	80009	426-1072-00
-20	358-0216-00			1		BUSHING,PLASTIC:0.257 ID X 0.412 INCH OD	80009	358-0216-00
-21	358-0599-00			5		BUSHING,SLEEVE:0.125 ID X 0.234 THK,PLSTC	28520	B-187-125
-22	358-0540-00			2		BSHG,MACH.THD:0.25-32 X 0.128 ID X 0.24" L	80009	358-0540-00
						(ATTACHING PARTS)		
-23	210-0583-00			2		NUT,PLAIN,HEX.:0.25-32 X 0.312 INCH,BRS	73743	2X20317-402
-24	210-0940-00			2		WASHER,FLAT:0.25 ID X 0.375 INCH OD,STL	79807	OBD
						- - - * - - -		
-25	378-0635-00			4		LENS,LIGHT:WHITE	80009	378-0635-00
-26	----- -----			1		RES.,VAR,NONWIR:(SEE R16002 EPL)		
-27	----- -----			1		RES.,VAR,NONWIR:(SEE R14288,R14289 EPL)		
						(ATTACHING PARTS)		
-28	210-0583-00			1		NUT,PLAIN,HEX.:0.25-32 X 0.312 INCH,BRS	73743	2X20317-402
-29	210-0940-00			1		WASHER,FLAT:0.25 ID X 0.375 INCH OD,STL	79807	OBD
						- - - * - - -		
-30	----- -----			1		RES.,VAR,NONWIR:(SEE R14398 EPL)		
						(ATTACHING PARTS)		
-31	210-0583-00			1		NUT,PLAIN,HEX.:0.25-32 X 0.312 INCH,BRS	73743	2X20317-402
-32	210-0940-00			1		WASHER,FLAT:0.25 ID X 0.375 INCH OD,STL	79807	OBD
						- - - * - - -		
-33	210-0046-00			1		WASHER,LOCK:0.261 ID,INTL,0.018 THK,BRS	78189	1214-05-00-0541C
-34	----- -----			1		RES.,VAR,NONWIR:(SEE R15102 EPL)		
						(ATTACHING PARTS)		
-35	210-0583-00			1		NUT,PLAIN,HEX.:0.25-32 X 0.312 INCH,BRS	73743	2X20317-402
-36	210-0940-00			1		WASHER,FLAT:0.25 ID X 0.375 INCH OD,STL	79807	OBD
						- - - * - - -		
-37	210-0046-00			1		WASHER,LOCK:0.261 ID,INTL,0.018 THK,BRS	78189	1214-05-00-0541C
-38	----- -----			1		RES.,VAR,NONWIR:(SEE R14498 EPL)		
						(ATTACHING PARTS)		
-39	210-0583-00			1		NUT,PLAIN,HEX.:0.25-32 X 0.312 INCH,BRS	73743	2X20317-402
-40	210-0940-00			1		WASHER,FLAT:0.25 ID X 0.375 INCH OD,STL	79807	OBD

http://manoman.sqhill.com

Fig. & Index No.	Tektronix Part No.	Serial/Model No. Eff	Dscont	Qty	1 2 3 4 5	Name & Description	Mfr Code	Mfr Part Number
1-41	----- -----			2		RES.,VAR,NONWIR:(SEE R17105,R17305 EPL)		
						(ATTACHING PARTS)		
-42	210-0583-00			2		NUT,PLAIN,HEX.:0.25-32 X 0.312 INCH,BRS	73743	2X20317-402
-43	210-0940-00			2		WASHER,FLAT:0.25 ID X 0.375 INCH OD,STL	79807	OBD
						- - - * - - -		
-44	333-2524-00			1		PANEL,FRONT:	80009	333-2524-00
-45	352-0477-00			8		HOLDER,LED:	80009	352-0477-00
-46	131-0955-00			2		CONNECTOR,RCPT,:CKT BD,28/56 CONTACT	13511	31-279
-47	386-2340-00			4		SUPPORT,CRT:FRONT	80009	386-2340-00
-48	----- -----			1		CKT BOARD ASSY:CRT SCALE ILLUM(SEE A10 EPL)		
-49	378-0728-00			1		. REFLECTOR,LIGHT:SCALE ILLUMINATION	80009	378-0728-00
-50	352-0329-00			1		. LAMPHOLDER:SCALE ILLUMINATION	80009	352-0329-00
	198-2862-00			1		. WIRE SET,ELEC:	80009	198-2862-00
-51	175-0825-00			FT		. . WIRE,ELECTRICAL:2 WIRE RIBBON	80009	175-0825-00
-52	131-0707-00			2		. . CONNECTOR,TERM.:22-26 AWG,BRS& CU BE GOLD	22526	47439
-53	352-0169-02			1		. . CONN BODY,PL,EL:2 WIRE RED	80009	352-0169-00
-54	348-0276-00			FT		SHLD GSKT,ELEC:0.026 OD NPRNW/WIRE NET CO	28817	01-0404-3719
-55	426-1607-00			1		FRAME,CABINET:FRONT	80009	426-1607-00
						(ATTACHING PARTS)		
-56	213-0183-00			4		SCR,TPG,THD FOR:6-20 X 0.5 TYPE B,PNH,STL	83385	OBD
						- - - * - - -		
-57	129-0385-00			1		SPACER,POST:1.77 L,W/6-32& 4-40 THD ENDS	80009	129-0385-00
-58	348-0115-00			1		GROMMET,PLASTIC:U-SHP,0.548 XO.462 INCH	80009	348-0115-00
-59	337-1688-03			1		SHLD,ELECTRICAL:HIGH VOLTAGE	80009	337-1688-03
						(ATTACHING PARTS)		
-60	211-0065-00	B010100	B042994	3		SCREW,MACHINE:4-40 X 0.188 INCH,PNH STL	77250	OBD
	211-0661-00	B042995		3		SCREW,MACHINE:4-40 X 0.25 INCH,PNH,STL	83385	OBD
						- - - * - - -		
-61	----- -----			1		CKT BOARD ASSY:FAN MOTOR(SEE A8 EPL)		
-62	131-0608-00			2		. TERMINAL,PIN:0.365 L X 0.025 PH BRZ GOLD	22526	47357
-63	136-0252-07			3		. SOCKET,PIN CONN:W/O DIMPLE	22526	75060-012
-64	136-0269-02			1		. SKT,PL-IN ELEK:MICROCIRCUIT,14 DIP,LOW CLE	73803	CS9002-14
-65	----- -----			1		. MOTOR,DC:(SEE B8045 EPL)		
-66	426-0781-00			1		. MOUNT,MOTOR:	80009	426-0781-00
						(ATTACHING PARTS)		
-67	213-0088-00			2		SCR,TPG,THD CTG:4-24 X 0.25 INCH,PNH STL	83385	OBD
						- - - * - - -		
-68	337-1762-00			1		SHLD,ELECTRICAL:FAN MOTOR	80009	337-1762-00
-69	426-0781-00			1		MOUNT,MOTOR:	80009	426-0781-00
						(ATTACHING PARTS)		
-70	213-0088-00			2		SCR,TPG,THD CTG:4-24 X 0.25 INCH,PNH STL	83385	OBD
						- - - * - - -		
	644-0150-00			1		XSTR BRKT ASSY:	80009	644-0150-00
						(ATTACHING PARTS)		
-71	210-0586-00			2		NUT,PL,ASSEM WA:4-40 X 0.25,STL CD PL	83385	211-041800-00
						- - - * - - -		
	----- -----			-		. TRANS BRKT ASSY INCLUDES:		
-72	----- -----			-		. TRANSISTOR:(SEE Q14009 EPL)		
						(ATTACHING PARTS)		
-73	211-0012-00			2		. SCREW,MACHINE:4-40 X 0.375,PNH STL CD PL	83385	OBD
-74	358-0214-00			2		. INSULATOR,BSHG:0.25 DIA X 0.188 INCH L	24011	OBD
-75	210-0205-00			1		. TERMINAL,LUG:SE #8	86928	5442-7
						- - - * - - -		
-76	214-1610-00			1		. HEAT SINK,ELEC:TRANSISTOR	80009	214-1610-00
-77	407-1153-00			1		. BRACKET,XSTR:ALUMINUM	80009	407-1153-00
-78	348-0253-00			1		GROMMET,PLASTIC:BLACK,OBLONG,3.OXO.925	80009	348-0253-00
-79	348-0064-00			2		GROMMET,PLASTIC:0.625 INCH DIA	80009	348-0064-00
-80	348-0056-00			1		GROMMET,PLASTIC:0.375 INCH DIA	80009	348-0056-00
	348-0442-00			1		GROMMET,PLASTIC:BLACK,ROUND,0.375" ID	28520	SB-500-6
	348-0517-00			2		GROMMET,PLASTIC:BLACK,ROUND,0.25 ID	28520	SB-375-4
	348-0518-00	B010100	B010549	2		GROMMET,PLASTIC:BLACK,ROUND,0.5 ID	28520	SB-625-8
	348-0518-00	B010550		1		GROMMET,PLASTIC:BLACK,ROUND,0.5 ID	28520	SB-625-8
	348-0064-00	B010550		1		GROMMET,PLASTIC:0.625 INCH DIA	80009	348-0064-00
	358-0540-00			2		BSHG,MACH.THD:0.25-32 X 0.128 ID X 0.24" L	80009	358-0540-00

http://manoman.sqhill.com

Fig. & Index No.	Tektronix Part No.	Serial/Model No. Eff	Dscont	Qty	1 2 3 4 5	Name & Description	Mfr Code	Mfr Part Number
1-81	407-1138-00			1		BRKT,DELAY LINE:ALUMINUM	80009	407-1138-00
						(ATTACHING PARTS)		
-82	210-0457-00			1		NUT,PL,ASSEM WA:6-32 X 0.312 INCH,STL	83385	OBD
						- - - * - - -		
	343-0144-00			1		CLAMP,LOOP:0.125 INCH ID,BLK NYLON	95987	1-8-2
-83	----- -----			1		DELAY LINE:(SEE DL11405 EPL)		
	131-1002-02			1		. CONN,DELAY LINE:	80009	131-1002-02
	131-1313-00			1		. RETAINER,WIRE,E:DELAY LINE TERMINAL	80009	131-1313-00
-84	----- -----			1		COIL,TUBE DEFLE:(SEE L14165 EPL)		
-85	344-0250-00			1		CLIP,ELECTRICAL:COMPONENT MOUNTING	80033	E50005-007
						(ATTACHING PARTS)		
-86	211-0008-00			1		SCREW,MACHINE:4-40 X 0.25 INCH,PNH STL	83385	OBD
-87	210-0586-00			1		NUT,PL,ASSEM WA:4-40 X 0.25,STL CD PL	83385	211-041800-00
						- - - * - - -		
-88	337-1763-01			1		SHIELD,ELEC:TRANSFORMER	80009	337-1763-01
-89	348-0349-00			FT		SHLD GSKT,ELEC:0.187 INCH DIA,2.75 FT L	07700	2143951
-90	348-0339-00			4		FOOT,CABINET:W/CORD WRAP	80009	348-0339-00
						(ATTACHING PARTS)		
-91	212-0020-00			4		SCREW,MACHINE:8-32 X 1.0 INCH,PNH STL	93907	OBD
						- - - * - - -		
-92	426-0970-00			1		FR SECT.,CAB.:REAR	80009	426-0970-00
						(ATTACHING PARTS)		
-93	211-0516-00			2		SCREW,MACHINE:6-32 X 0.875 INCH,PNH STL	83385	OBD
-94	210-1002-00			2		WASHER,FLAT:0.125 ID X 0.25 INCH OD,BRS	12327	OBD
						- - - * - - -		
-95	378-0044-01			1		FILTER ELEM,AIR:2.5 X 2.5 X 0.25	80009	378-0044-01
-96	131-0955-00			4		CONNECTOR,RCPT,:CKT BD,28/56 CONTACT	13511	31-279
-97	210-0255-00			4		TERMINAL,LUG:0.391" ID INT TOOTH	80009	210-0255-00
-98	386-2408-00			1		PLATE,CONN MTG:ALUMINUM	80009	386-2408-00
	200-1445-05			1		COV,LINE V SEL:W/HARDWARE	80009	200-1445-05
						(ATTACHING PARTS)		
-99	211-0101-00			2		SCREW,MACHINE:4-40 X 0.25" 100 DEG,FLH STL	83385	OBD
						- - - * - - -		
	----- -----			-		. COVER INCLUDES:		
-100	----- -----			1		. COVER,SCORE:REAR(AVAILABLE AS ASSY ONLY)		
-101	378-0807-01			1		. SCREEN,FAN:2.5 X 2.5 X 0.032,AL	80009	378-0807-01
-102	200-1399-02			1		. COVER,FAN IMPLR:	80009	200-1399-02
-103	369-0031-00			1		IMPLR,FAN,AXIAL:2.60 INCH OD,PLASTIC	80009	369-0031-00
	213-0022-00			1		. SETSCREW:4-40 X 0.188 INCH,HEX SOC STL	74445	OBD
-104	200-1445-05			1		COV,LINE V SEL:W/HARDWARE	80009	200-1445-05
-105	352-0102-00			1		. FUSEHOLDER:0.262"ID TUBE FOR CRTG FUSE	80009	352-0102-00
						(ATTACHING PARTS)		
-106	213-0717-00			2		. SCREW,TPG,TF:4-20 X 0.312 PNH,STL,CD PL	93907	OBD
						- - - * - - -		
-107	204-0549-01	B010100	B010799	1		BODY ASSY,LINE:	80009	204-0549-01
	204-0549-03	B010800		1		BODY ASSY,LINE:	80009	204-0549-03
						(ATTACHING PARTS)		
-108	210-0407-00			2		NUT,PLAIN,HEX.:6-32 X 0.25 INCH,BRS	73743	3038-0228-402
-109	210-0006-00			2		WASHER,LOCK:#6 INTL,0.018THK,STL CD PL	78189	1206-00-00-0541C
						- - - * - - -		
	----- -----			-		. BODY ASSY,LINE INCLUDES:		
	131-1318-01			2		. BUS CONDUCTOR:	80009	131-1318-01
	210-0666-00			2		. RIVET,TUBULAR:0.188 L X 0.125 OD,BRS	12014	3329-3-16LONG
	214-0778-00	B010100	B010799	1		. CONT ASSY,ELEC:LINE V SEL,LOW/MED/HI	80009	214-0778-00
	214-0778-01	B010800		1		. CONTACT ASSY,EL:LINE V SEL,LOW/MED/HI	80009	214-0778-01
	344-0135-00			2		. CLIP,ELECTRICAL:FUSE,CU BE ALBALOY PL	80009	344-0135-00
-110	161-0033-07			1		CABLE ASSY,PWR,:3 WIRE,92 INCH LONG	16428	KH8389
						(ATTACHING PARTS)		
-111	358-0161-00			1		BSHG,STRAIN RLF:FOR 0.50 INCH HOLE,PLASTIC	28520	SR5P4
						- - - * - - -		
-112	386-2332-10			1		PANEL,REAR:	80009	386-2332-10
						(ATTACHING PARTS)		
-113	211-0105-00			1		SCREW,MACHINE:4-40 X 0.188"100 DEG,FLH STL	83385	OBD
-114	211-0138-00			1		SCREW,MACHINE:5-40 X 2.562 INCH,PNH STL	83486	OBD
-115	210-0586-00			1		NUT,PL,ASSEM WA:4-40 X 0.25,STL CD PL	83385	211-041800-00
-116	210-0202-00			1		TERMINAL,LUG:0.146 ID,LOCKING,BRZ TINNED	78189	2104-06-00-2520N
						- - - * - - -		

http://manoman.sqhill.com

Fig. & Index No.	Tektronix Part No.	Serial/Model No. Eff	Dscont	Qty	1 2 3 4 5	Name & Description	Mfr Code	Mfr Part Number
1-117	----- -----			1		SW,THERMOSTATIC:(SEE S14520 EPL)		
						(ATTACHING PARTS)		
-118	213-0138-00			2		SCR,TPG,TF:4-24 X 0.188 INCH,PNH STL	83385	OBD
						- - - * - - -		
-119	----- -----			1		TRANSFORMER:(SEE T14500 EPL)		
						(ATTACHING PARTS)		
-120	211-0538-00			2		SCREW,MACHINE:6-32 X 0.312"100 DEG,FLH STL	83385	OBD
-121	210-0457-00			2		NUT,PL,ASSEM WA:6-32 X 0.312 INCH,STL	83385	OBD
	211-0114-00			1		SCREW,MACHINE:4-40 X 0.438 INCH,FLH STL	83385	OBD
	210-0551-00			1		NUT,PLAIN,HEX.:4-40 X 0.25 INCH,STL	83385	OBD
						- - - * - - -		
	----- -----			-		. TRANSFORMER INCLUDES:		
-122	407-1066-00			1		. BRACKET,XFMR:ALUMINUM	80009	407-1066-00
-123	212-0523-00			4		. SCREW,MACHINE:10-32 X 2.750,HEX HD STL	83385	OBD
-124	210-0812-00			4		. WASHER,NONMETAL:#10,FIBER	86445	OBD
-125	166-0457-00			4		. INSUL SLVG,ELEC:0.19 ID X 1.875"LONG MYLAR	80009	166-0457-00
-126	200-1544-00			1		. COVER,ELEC XFMR:2.0 X 2.5 X 0.65,STEEL	80009	200-1544-00
-127	220-0561-00			4		. NUT,PLAIN,HEX.:10-32 X 0.25 INCH,BRS	80009	220-0561-00
-128	210-0056-00			4		. WASHER,LOCK:SPLIT,0.195 ID X 0.32" OD,P BRZ	83385	OBD
-129	210-0202-00			1		TERMINAL,LUG:0.146 ID,LOCKING,BRZ TINNED	78189	2104-06-00-2520N
						(ATTACHING PARTS)		
-130	210-0586-00			1		NUT,PL,ASSEM WA:4-40 X 0.25,STL CD PL	83385	211-041800-00
						- - - * - - -		
-131	----- -----			2		TRANSISTOR:(SEE Q4102,Q4401 EPL)		
	----- -----			1		TRANSISTOR:(SEE Q4301 EPL)		
						(ATTACHING PARTS)		
-132	211-0012-00			3		SCREW,MACHINE:4-40 X 0.375,PNH STL CD PL	83385	OBD
-133	210-0071-00			3		WASHER,SPR TNSN:0.146 ID X 0.323" OD,STL	78189	4706-05-01-0531
						- - - * - - -		
-134	342-0163-00			3		INSULATOR,PLATE:XSTR,0.675 X 0.625 X 0.001"	80009	342-0163-00
-135	441-1084-05			1		CHASSIS,SCOPE:W/HARDWARE	80009	441-1084-05
-136	129-0394-00			4		. SPACER,POST:0.50L,W/8-32 THD	000GF	50-832-16
-137	214-0291-00			1		. CONTACT,SPRING:1.188 X 0.375 X 0.25 INCH	80009	214-0291-00
	136-0515-01			1		SKT,PL-IN ELEK:ELCTRN TUBE,14 CONT W/LEAD	80009	136-0515-01
-138	136-0202-01			1		. SOCKET,PLUG-IN:14 PIN	80009	136-0202-01
-139	131-0707-00			4		. CONNECTOR,TERM.:22-26 AWG,BRS& CU BE GOLD	22526	47439
-140	352-0162-00			1		. HLDR,TERM CONN:4 WIRE BLACK	80009	352-0162-00
-141	179-2670-00			1		WIRING HARNESS:MAIN	80009	179-2670-00
-142	352-0169-00			1		. HLDR,TERM CONN:2 WIRE BLACK	80009	352-0169-00
-143	352-0161-00			1		. HLDR,TERM CONN:3 WIRE BLACK	80009	352-0161-00
-144	210-0774-00			23		. EYELET,METALLIC:0.152 OD X 0.245 INCH L,BRS	80009	210-0774-00
-145	210-0775-00			23		. EYELET,METALLIC:0.126 OD X 0.23 INCH L,BRS	80009	210-0775-00

http://manoman.sqhill.com

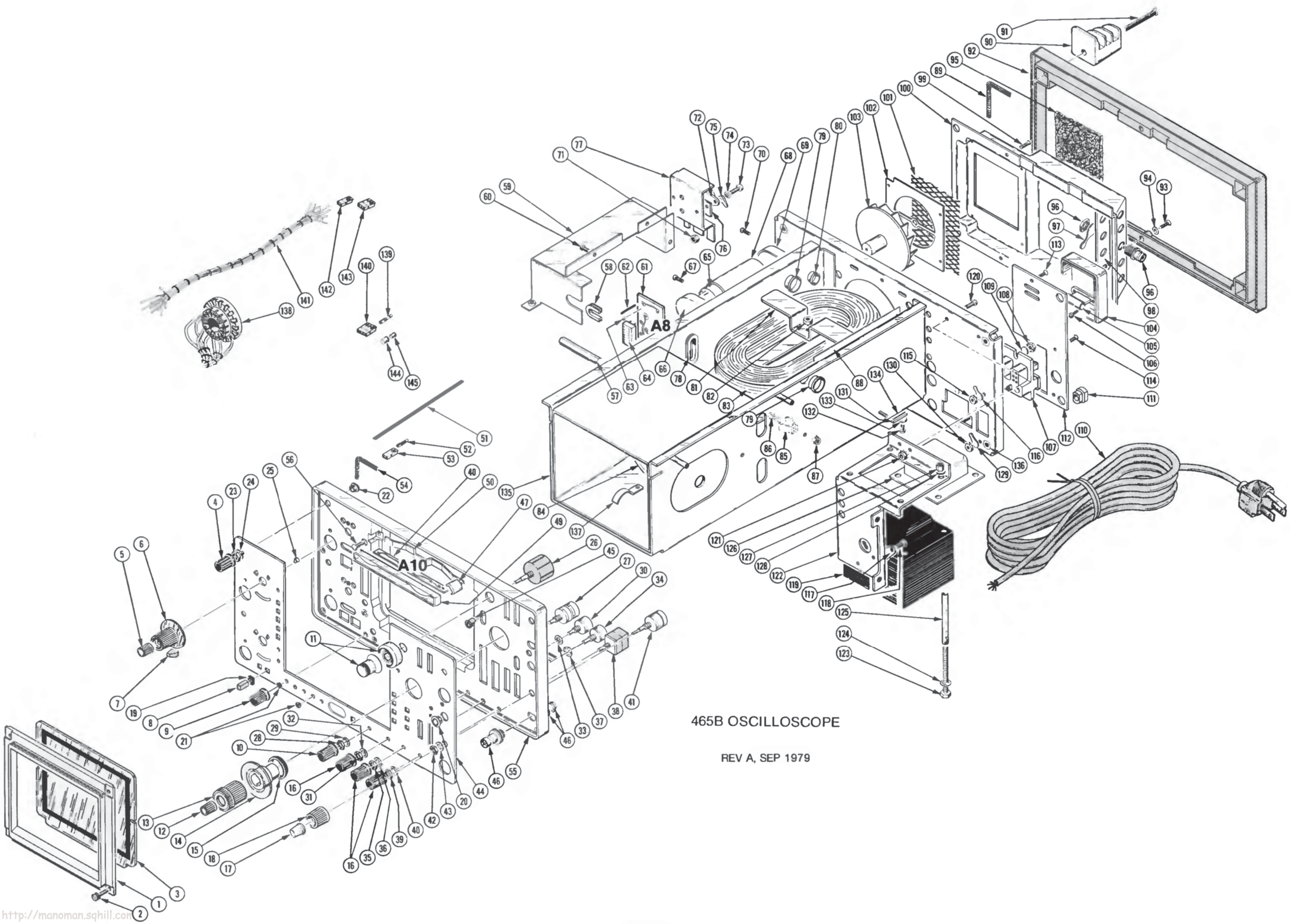

465B OSCILLOSCOPE

REV A, SEP 1979

http://manoman.sqhill.com

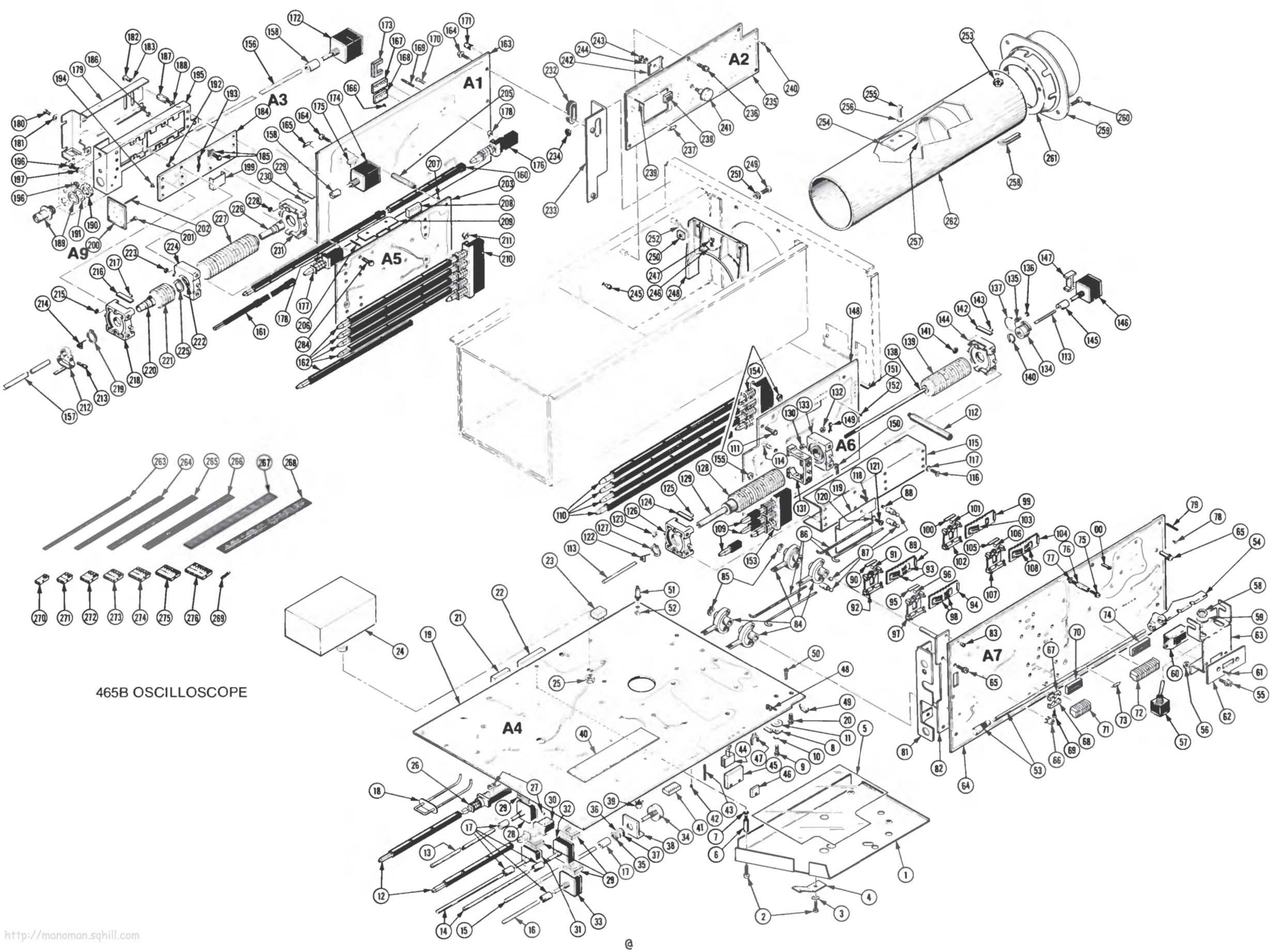

465B OSCILLOSCOPE

http://manoman.sqhill.com

Fig. & Index No.	Tektronix Part No.	Serial/Model No. Eff	Dscont	Qty	1 2 3 4 5	Name & Description	Mfr Code	Mfr Part Number
2-1	337-1711-03			1		SHIELD,ELEC:HIGH VOLTAGE	80009	337-1711-03
						(ATTACHING PARTS)		
-2	211-0244-00			3		SCR,ASSEM WSHR:4-40 X 0.312 INCH,PNH STL	78189	OBD
-3	210-0004-00			4		WASHER,LOCK:#4 INTL,0.015THK,STL CD PL	78189	1204-00-00-0541C
						- - - * - - -		
	131-1428-00			1		CONTACT,ELEC:GROUNDING CLIP	80009	131-1428-00
						(ATTACHING PARTS)		
	211-0012-00			1		SCREW,MACHINE:4-40 X 0.375,PNH STL CD PL	83385	OBD
	210-0851-00			1		WASHER,FLAT:0.119 ID X 0.375 INCH OD,STL	12327	OBD
						- - - * - - -		
-4	131-1428-00			1		CONTACT,ELEC:GROUNDING CLIP	80009	131-1428-00
-5	342-0175-00			1		INSULATOR,FILM:3.65 X 4.70 INCH	80009	342-0175-00
-6	129-0413-01			4		SPACER,POST:0.538 L,W/4-40 TAP 1 END	80009	129-0413-01
-7	210-0994-00			4		WASHER,FLAT:0.125 ID X 0.25" OD,STL	86928	5714-147-20N
-8	----- -----			2		TRANSISTOR:(SEE Q4190,Q4312 EPL)		
						(ATTACHING PARTS)		
-9	211-0182-00			2		SCR,ASSEM WSHR:2-56 X 0.312 INCH,PNH,STL	12360	OBD
-10	210-1156-00			2		WASHER,SHLDR:0.09 ID X 0.085 D,NYL,0.2 OD	80009	210-1156-00
						- - - * - - -		
-11	342-0166-00			2		INSULATOR,PLATE:TRANSISTOR	80009	342-0166-00
-12	384-1408-00			2		EXTENSION SHAFT:3.8 L,MOLDED PLASTIC	80009	384-1408-00
-13	384-0457-00			1		EXTENSION SHAFT:6.7 L X 0.1230D EPOXY-GL	80009	384-0457-00
-14	384-1187-00			2		EXTENSION SHAFT:3.40 INCH LONG	80009	384-1187-00
-15	384-1179-00			1		EXTENSION SHAFT:9.312 INCH LONG	80009	384-1179-00
-16	384-1174-00			1		EXTENSION SHAFT:1.80 INCH LONG	80009	384-1174-00
-17	376-0029-00			5		CPLG,SHAFT,RGD:0.128 ID X 0.312 OD X 0.5"L	80009	376-0029-00
	----- -----			-		EACH COUPLING SHAFT INCLUDES:		
	213-0075-00			10		. SETSCREW:4-40 X 0.094,STL BK OXD,HEX SKT	000BK	OBD
-18	195-0276-01			1		LEAD,ELECTRICAL:0.062 DIA,BRS,W/MLD COLLAR	80009	195-0276-01
-19	----- -----			1		CKT BOARD ASSY:INTERFACE(SEE A4 EPL)		
						(ATTACHING PARTS)		
-20	211-0244-00			7		SCR,ASSEM WSHR:4-40 X 0.312 INCH,PNH STL	78189	OBD
						- - - * - - -		
	----- -----			-		. CKT BOARD ASSY INCLUDES:		
-21	136-0499-12			1		. CONNECTOR,RCPT,:12 CONTACT	00779	4-380949-2
-22	136-0499-14			1		. CONNECTOR,RCPT,:14 CONTACT	00779	4-380949-4
-23	136-0514-00			1		. SKT,PL-IN ELEC:MICROCIRCUIT,8 DIP	73803	CS9002-8
-24	----- -----			1		. SEMICOND DVC,DI:V MULTI(SEE U4032 EPL)		
						(ATTACHING PARTS)		
-25	220-0736-00			1		. NUT,PL,EXT WSHR:8-32 X 0.344 HEX,NYLON	23050	OBD
						- - - * - - -		
-26	----- -----			1		. PUSHBUTTON SW:BEAMFIND(SEE S4075 EPL)		
-27	361-0382-00	B010100	B010849	4		. SPACER,PB SW:BROWN,0.275 INCH LONG	80009	361-0382-00
	361-0608-00	B010850		4		. SPACER,PUSH SW:PLASTIC	80009	361-0608-00
-28	----- -----			1		. RES.,VAR,NONWIR:INTENSITY(SEE R4059 EPL)		
-29	361-0607-00			4		. SPACER,SWITCH:PLASTIC	80009	361-0607-00
-30	----- -----			1		. PUSHBUTTON SW:X10 MAG(SEE S4371 EPL)		
-31	----- -----			1		. RES.,VAR,NONWIR:ASTIG(SEE R4178 EPL)		
-32	----- -----			1		. RES.,VAR,NONWIR:TRACE ROTATION(SEE R4179 EPL)		
-33	----- -----			1		. RES.,VAR,NONWIR:SCALE ILLUM(SEE R4195 EPL)		
-34	----- -----			1		. RES.,VAR,NONWIR:FOCUS(SEE R4132 EPL)		
						(ATTACHING PARTS)		
-35	210-0583-00			1		. NUT,PLAIN,HEX.:0.25-32 X 0.312 INCH,BRS	73743	2X20317-402
-36	210-0046-00			1		. WASHER,LOCK:0.261 ID,INTL,0.018 THK,BRS	78189	1214-05-00-0541C
-37	210-0940-00			1		. WASHER,FLAT:0.25 ID X 0.375 INCH OD,STL	79807	OBD
						- - - * - - -		
-38	386-2433-00			1		. SUPPORT,VAR RES:CIRCUIT CARD MOUNTING	80009	386-2433-00
-39	131-1003-00			5		. CONN,RCPT,ELEC:CKT BD MT,3 PRONG	80009	131-1003-00
-40	337-1759-00			1		. SHLD,ELECTRICAL:SWEEP	80009	337-1759-00
-41	136-0269-02			3		. SKT,PL-IN ELEK:MICROCIRCUIT,14 DIP,LOW CLE	73803	CS9002-14
-42	136-0252-04	B010100	B033189	168		. SOCKET,PIN TERM:U/W 0.016-0.018 DIA PINS	22526	75060-007
	136-0252-07	B033190		165		. SOCKET,PIN CONN:W/O DIMPLE	22526	75060-012
-43	131-0608-00	B010100	B033189	43		. TERMINAL,PIN:0.365 L X 0.025 PH BRZ GOLD	22526	47357
	131-0608-00	B033190		41		. TERMINAL,PIN:0.365 L X 0.025 PH BRZ GOLD	22526	47357
-44	358-0214-00			3		. INSULATOR,BSHG:0.25 DIA X 0.188 INCH L	24011	OBD
-45	124-0092-00			2		. TERMINAL BOARD:3 NOTCH,CERAMIC,CLIP MTD	80009	124-0092-00

http://manoman.sqhill.com

Fig. & Index No.	Tektronix Part No.	Serial/Model No. Eff	Dscont	Qty	1 2 3 4 5	Name & Description	Mfr Code	Mfr Part Number
2-46	124-0118-00			1		. TERMINAL BOARD:1 NOTCH,CERAMIC,CLIP MTD	80009	124-0118-00
-47	344-0154-00			4		. CLIP,ELECTRICAL:FUSE,CKT BD MT	80009	344-0154-00
-48	131-1261-00			24		. CONTACT,ELEC:F-SHAPED	00779	1-380953-0
-49	131-0566-00			10		. BUS CONDUCTOR:DUMMY RES,2.375,22 AWG	55210	L-2007-1
-50	214-0579-00	B010100	B010849	17		. TERM,TEST POINT:BRS CD PL	80009	214-0579-00
	214-0579-00	B010850	B039949	18		. TERM,TEST POINT:BRS CD PL	80009	214-0579-00
	214-0579-02	B039950		18		. TERM,TEST POINT:BRASS	80009	214-0579-02
-51	131-0382-00			1		. TERMINAL,STUD:0.812 L,INSULATED	71279	572-4822-01-05-1
						(ATTACHING PARTS)		
-52	210-0586-00			1		. NUT,PL,ASSEM WA:4-40 X 0.25,STL CD PL	83385	211-041800-00
						- - - * - - -		
	198-2850-00			1		. WIRE SET,ELEC:	80009	198-2850-00
-53	384-1159-00			1		EXTENSION SHAFT:10.384 INCH LONG,W/KNOB	80009	384-1159-00
-54	214-1756-00			1		ACTUATOR,SWITCH:POWER	80009	214-1756-00
	644-0151-00			1		SWITCH ASSY:	80009	644-0151-00
						(ATTACHING PARTS)		
-55	211-0244-00			1		SCR,ASSEM WSHR:4-40 X 0.312 INCH,PNH STL	78189	OBD
-56	210-0551-00			1		NUT,PLAIN,HEX.:4-40 X 0.25 INCH,STL	83385	OBD
	210-0406-00			1		NUT,PLAIN,HEX.:4-40 X 0.188 INCH,BRS	73743	2X12161-402
	210-0994-00			1		WASHER,FLAT:0.125 ID X 0.25" OD,STL	86928	5714-147-20N
						- - - * - - -		
	----- -----			-		. SWITCH ASSY INCLUDES:		
-57	----- -----			1		. SWITCH,TOGGLE:POWER ON(SEE S14510 EPL)		
						(ATTACHING PARTS)		
-58	210-0562-00			1		. NUT,PLAIN,HEX.:0.25-40 X 0.312 INCH,BBS	73743	2X20224-402
-59	210-0046-00			1		. WASHER,LOCK:0.261 ID,INTL,0.018 THK,BRS	78189	1214-05-00-0541C
						- - - * - - -		
-60	----- -----			1		. SWITCH,SLIDE:LINE SELECT(SEE S14500 EPL)		
						(ATTACHING PARTS)		
-61	211-0101-00			2		. SCREW,MACHINE:4-40 X 0.25" 100 DEG,FLH STL	83385	OBD
						- - - * - - -		
-62	200-1526-00			1		. CON,INV SW HOLE:	80009	200-1526-00
-63	407-1133-00			1		. BRACKET,ELEC SW:ALUMINUM	80009	407-1133-00
	386-2660-00			1		SUPPORT,CKT BD:ACETAL	80009	386-2660-00
-64	----- -----			1		CKT BOARD ASSY:TRIG GEN & SWP LOG(SEE A7 EPL)		
						(ATTACHING PARTS)		
-65	211-0244-00			4		SCR,ASSEM WSHR:4-40 X 0.312 INCH,PNH STL	78189	OBD
						- - - * - - -		
	----- -----			-		. CKT BOARD ASSY INCLUDES:		
-66	131-1003-00			8		. CONN,RCPT,ELEC:CKT BD MT,3 PRONG	80009	131-1003-00
-67	200-0945-00			3		. COVER,HALF XSTR:DUAL TO-18,ALUMINUM	80009	200-0945-00
-68	200-0945-01			3		. COVER,HALF XSTR:DUAL TO-18,W/2-56 THD	80009	200-0945-01
						(ATTACHING PARTS)		
-69	211-0062-00			1		. SCREW,MACHINE:2-56 X 0.312 INCH,RDH STL	83385	OBD
						- - - * - - -		
-70	136-0260-02			2		. SKT,PL-IN ELEK:MICROCIRCUIT,16 DIP,LOW CLE	71785	133-51-92-008
-71	136-0499-10			1		. CONNECTOR,RCPT,:10 CONTACT	00779	4-380949-0
-72	136-0499-14			1		. CONNECTOR,RCPT,:14 CONTACT	00779	4-380949-4
-73	131-0566-00			3		. BUS CONDUCTOR:DUMMY RES,2.375,22 AWG	55210	L-2007-1
-74	136-0634-00			1		. SOCKET,PLUG-IN:20 LEAD DIP,CKT BD MTG	73803	CS9002-20
-75	211-0244-00			1		. SCR,ASSEM WSHR:4-40 X 0.312 INCH,PNH STL	78189	OBD
-76	129-0413-01			1		. SPACER,POST:0.538 L,W/4-40 TAP 1 END	80009	129-0413-01
-77	210-0994-00			1		. WASHER,FLAT:0.125 ID X 0.25" OD,STL	86928	5714-147-20N
-78	136-0252-07			108		. SOCKET,PIN CONN:W/O DIMPLE	22526	75060-012
-79	131-0608-00			19		. TERMINAL,PIN:0.365 L X 0.025 PH BRZ GOLD	22526	47357
-80	214-0579-00	B010100	B039949	3		. TERM,TEST POINT:BRS CD PL	80009	214-0579-00
	214-0579-02	B039950		3		. TERM,TEST POINT:BRASS	80009	214-0579-02
-81	407-1157-00			1		. BRACKET,ELEC SW:ALUMINUM	80009	407-1157-00
-82	386-2376-00			1		. PLATE,LEVER MTG:SLIDE SWITCH	80009	386-2376-00
						(ATTACHING PARTS)		
-83	210-0657-00			2		. EYELET,METALLIC:0.089 OD X 0.218 L,BR	57771	GS3-7
						- - - * - - -		
-84	214-1770-00			4		. LEVER,SLIDE SW:	80009	214-1770-00
						(ATTACHING PARTS)		
-85	354-0165-00			4		. RING,RETAINING:0.114 FREE IDX 0.025 INCH	97464	1000-15
						- - - * - - -		

http://manoman.sqhill.com

Fig. & Index No.	Tektronix Part No.	Serial/Model No. Eff	Dscont	Qty	1 2 3 4 5	Name & Description	Mfr Code	Mfr Part Number
2-86	384-1160-00			4		. EXTENSION SHAFT:3.05 INCH LONG	91260	OBD
-87	376-0142-00			4		. ADPT,SHAFT,CPLG:SLIDE TO SHAFT	80009	376-0142-00
-88	213-0048-00			1		. . SETSCREW:4-40 X 0.125 INCH,HEX SOC STL	74445	OBD
	----- -----			1		. SWITCH ASSY:B COUPLING(SEE S7015 EPL)		
	351-0355-01			1		. . GUIDE,SLIDE SW:W/SPRINGS AND ROLLERS	80009	351-0355-01
-89	351-0355-00			1		. . . GUIDE,SLIDE SW:	80009	351-0355-00
-90	214-1126-01			2		. . . SPRING,FLAT:GREEN COLORED	80009	214-1126-01
-91	214-1127-00			2		. . . ROLLER,DETENT:0.125 DIA X 0.125 INCH L	80009	214-1127-00
-92	105-0804-00			1		. . ACTUATOR,SL SW:4 OF 5 POSITIONS	80009	105-0804-00
-93	131-2235-07			1		. . CONTACT,ELEC:COPPER BERYLLIUM	80009	131-2235-07
	210-0779-00			1		. . RIVET,TUBULAR:0.051 OD X 0.115 INCH LONG	42838	RA-29952715
	----- -----			1		. SWITCH ASSY:B SOURCE(SEE S7112 EPL)		
	351-0355-01			1		. . GUIDE,SLIDE SW:W/SPRINGS AND ROLLERS	80009	351-0355-01
-94	351-0355-00			1		. . . GUIDE,SLIDE SW:	80009	351-0355-00
-95	214-1126-01			2		. . . SPRING,FLAT:GREEN COLORED	80009	214-1126-01
-96	214-1127-00			2		. . . ROLLER,DETENT:0.125 DIA X 0.125 INCH L	80009	214-1127-00
-97	105-0807-00			1		. . ACTUATOR,SL SW:5 OF 6 POSITIONS	80009	105-0807-00
-98	131-2235-07			1		. . CONTACT,ELEC:COPPER BERYLLIUM	80009	131-2235-07
	210-0779-00			1		. . RIVET,TUBULAR:0.051 OD X 0.115 INCH LONG	42838	RA-29952715
	----- -----			1		. SWITCH ASSY:A COUPLING(SEE S7415 EPL)		
	351-0355-01			1		. . GUIDE,SLIDE SW:W/SPRINGS AND ROLLERS	80009	351-0355-01
-99	351-0355-00			1		. . . GUIDE,SLIDE SW:	80009	351-0355-00
-100	214-1126-01			2		. . . SPRING,FLAT:GREEN COLORED	80009	214-1126-01
-101	214-1127-00			2		. . . ROLLER,DETENT:0.125 DIA X 0.125 INCH L	80009	214-1127-00
-102	105-0805-00			1		. . ACTUATOR,SL SW:4 OF 6 POSITIONS	80009	105-0805-00
-103	131-2235-07			1		. . CONTACT,ELEC:COPPER BERYLLIUM	80009	131-2235-07
	210-0779-00			1		. . RIVET,TUBULAR:0.051 OD X 0.115 INCH LONG	42838	RA-29952715
	----- -----			1		. SWITCH ASSY:A SOURCE(SEE S7312 EPL)		
	351-0355-01			1		. . GUIDE,SLIDE SW:W/SPRINGS AND ROLLERS	80009	351-0355-01
-104	351-0355-00			1		. . . GUIDE,SLIDE SW:	80009	351-0355-00
-105	214-1126-01			2		. . . SPRING,FLAT:GREEN COLORED	80009	214-1126-01
-106	214-1127-00			2		. . . ROLLER,DETENT:0.125 DIA X 0.125 INCH L	80009	214-1127-00
-107	105-0805-00			1		. . ACTUATOR,SL SW:4 OF 6 POSITIONS	80009	105-0805-00
-108	131-2235-07			1		. . CONTACT,ELEC:COPPER BERYLLIUM	80009	131-2235-07
	210-0779-00			1		. . RIVET,TUBULAR:0.051 OD X 0.115 INCH LONG	42838	RA-29952715
-109	384-1136-00			3		EXTENSION SHAFT:0.95 INCH LONG	80009	384-1136-00
-110	384-1059-00			4		EXTENSION SHAFT:6.58 INCH LONG	80009	384-1059-00
	672-0781-00			1		CKT BOARD ASSY:TIMING	80009	672-0781-00
						(ATTACHING PARTS)		
-111	211-0244-00			1		SCR,ASSEM WSHR:4-40 X 0.312 INCH,PNH STL	78189	OBD
-112	129-0386-00			1		POST,ELEC-MECH:HEX,1.593 INCH LONG	80009	129-0386-00
						- - - * - - -		
	----- -----			-		. TIMING ASSY INCLUDES:		
-113	384-1105-00			1		. EXTENSION SHAFT:8.241 L X 0.081 INCH OD	80009	384-1105-00
	131-0963-00			1		. CONTACT,ELEC:GROUNDING	000EX	OBD
	334-3448-00			1		. MARKER,IDENT:MARKED NOTICE	80009	334-3448-00
	----- -----			1		. SW CAM ACTR AS:TIME/CM(SEE S6111 EPL)		
						(ATTACHING PARTS)		
-114	211-0244-00			8		. SCR,ASSEM WSHR:4-40 X 0.312 INCH,PNH STL	78189	OBD
						- - - * - - -		
	----- -----			-		. . ACTUATOR ASSY INCLUDES:		
-115	200-2314-00			1		. . COVER,CAM SW:43 ELEMENTS,ALUMINUM	80009	200-2314-00
						(ATTACHING PARTS)		
-116	211-0673-00			6		. . SCREW,MACHINE:6-32 X 3.0 L,HEX,STL		
-117	210-0004-00			7		. . WASHER,LOCK:#4 INTL,0.015THK,STL CD PL	78189	1204-00-00-0541C
-118	211-0101-00			1		. . SCREW,MACHINE:4-40 X 0.25" 100 DEG,FLH STL	83385	OBD
						- - - * - - -		
-119	337-2621-00			1		. . SHIELD,ELEC:SWITCH	80009	337-2621-00
						. (ATTACHING PARTS)		
-120	211-0673-00			1		. . SCREW,MACHINE:6-32 X 3.0 L,HEX,STL,CD PL	80009	211-0673-00
-121	210-0004-00			1		. . WASHER,LOCK:#4 INTL,0.015THK,STL CD PL	78189	1204-00-00-0541C
						- - - * - - -		
-122	131-0963-00			1		. . CONTACT,ELEC:GROUNDING	000EX	OBD
-123	210-0406-00			4		. . NUT,PLAIN,HEX.:4-40 X 0.188 INCH,BRS	73743	2X12161-402
-124	214-1139-02			1		. . SPRING,FLAT:GREEN COLORED	80009	214-1139-02
	214-1139-03			1		. . SPRING,FLAT:RED COLORED	80009	214-1139-03

http://manoman.sqhill.com

Fig. & Index No.	Tektronix Part No.	Serial/Model No. Eff	Dscont	Qty	1 2 3 4 5	Name & Description	Mfr Code	Mfr Part Number
2-125	214-1752-00			2		. . ROLLER,DETENT:	80009	214-1752-00
-126	401-0180-00			1		. . BEARING,CAM SW:FRONT	80009	401-0180-00
						(ATTACHING PARTS)		
-127	354-0390-00			1		. . RING,RETAINING:0.338 ID X 0.025" THK,STL	79136	5100-37MD
						- - - * - - -		
-128	105-0801-01			1		. . ACTUATOR,CAM SW:TIME/CM,DRUM	80009	105-0801-01
	210-1160-00			1		. . WASHER,NONMETAL:0.109 ID X 0.25 INCH OD	86445	OBD
	214-1416-00			1		. . SPRING,HLCPS:0.176 OD X 0.835 INCH LONG	27143	OBD
-129	384-0878-02			1		. . SHAFT,CAM SW:	80009	384-0878-02
-130	210-0406-00			4		. . NUT,PLAIN,HEX.:4-40 X 0.188 INCH,BRS	73743	2X12161-402
-131	407-1199-00			1		. . BRACKET,COVER:ABS	80009	407-1199-00
-132	210-0406-00			4		. . NUT,PLAIN,HEX.:4-40 X 0.188 INCH,BRS	73743	2X12161-402
-133	401-0178-02			1		. . BEARING,CAM SW:0.428 ID,PLASTIC	80009	401-0178-02
-134	352-0464-00			1		. . HOLDER,STOP PIN:ACTUATOR	80009	352-0464-00
	213-0075-00			1		. . SETSCREW:4-40 X 0.094,STL BK OXD,HEX SKT	000BK	OBD
-135	105-0733-00			1		. . STOP,SLIDE:0.314 L,BRASS	80009	105-0733-00
-136	354-0392-00			1		. . RING,RETAINING:	79136	5555-12MD
-137	214-2478-00			1		. . SPR,HLCL,TRSN:0.015 DIA MUSIC WIRE	80009	214-2478-00
-138	384-0882-06			1		. . SHAFT,CAM SW:7.875 L,INTMDCNCTRC,W/DRIVER	80009	384-0882-06
139	105-0802-01			1		. . ACTUATOR,CAM SW:TIME/CM DRUM	80009	105-0802-01
						(ATTACHING PARTS)		
-140	354-0390-00			1		. . RING,RETAINING:0.338 ID X 0.025" THK,STL	79136	5100-37MD
						- - - * - - -		
-141	210-0406-00			4		. . NUT,PLAIN,HEX.:4-40 X 0.188 INCH,BRS	73743	2X12161-402
-142	214-1139-02			1		. . SPRING,FLAT:GREEN COLORED	80009	214-1139-02
	214-1139-03			1		. . SPRING,FLAT:RED COLORED	80009	214-1139-03
-143	214-1752-00			2		. . ROLLER,DETENT:	80009	214-1752-00
-144	401-0180-00			1		. . BEARING,CAM SW:FRONT	80009	401-0180-00
-145	376-0039-00			1		. ADPT,SHAFT,CPLG:0.128 AND 0.082"DIA SHAFT	80009	376-0039-00
	213-0022-00			2		. . SETSCREW:4-40 X 0.188 INCH,HEX SOC STL	74445	OBD
-146	----- -----			1		. RES.,VAR,NONWIR:(SEE R6155 EPL)		
-147	361-0515-00			1		. SPACER,SWITCH:PLASTIC	80009	361-0515-00
-148	----- -----			1		. CKT BOARD ASSY:TIMING(SEE A6 EPL)		
-149	131-0604-00			42		. . CONTACT,ELEC:CKT BD SW,SPR,CU BE	80009	131-0604-00
-150	131-1261-00			26		. . CONTACT,ELEC:F-SHAPED	00779	1-380953-0
-151	131-0608-00			17		. . TERMINAL,PIN:0.365 L X 0.025 PH BRZ GOLD	22526	47357
-152	136-0252-07			12		. . SOCKET,PIN CONN:W/O DIMPLE	22526	75060-012
-153	----- -----			1		. . SW,PUSHBUTTON:3 WIDE(SEE S6205 EPL)		
-154	----- -----			1		. . SW,PUSHBUTTON:4 WIDE(SEE S6260 EPL)		
-155	361-0542-00			8		. . SPACER,SWITCH:PLASTIC	71590	J-64281
-156	384-1007-01			2		EXTENSION SHAFT:8.428 L X 0.124 OD PLSTC	80009	384-1007-01
-157	384-1149-00			2		EXTENSION SHAFT:7.0 INCH LONG	80009	384-1149-00
-158	376-0029-00	B010100	B010849	2		CPLG,SHAFT,RGD:0.128 ID X 0.312 OD X 0.5"L	80009	376-0029-00
	376-0051-01	B010850		2		CPLG,SHAFT,FLEX:0.127 ID X 0.375 OD	80009	376-0051-01
	213-0022-00			4		. SETSCREW:4-40 X 0.188 INCH,HEX SOC STL	74445	OBD
	384-1542-00			1		EXTENSION SHAFT:11.682 L X 0.187 SQ,PLSTC	80009	384-1542-00
-159	384-1060-00			1		. EXTENSION SHAFT:7.831 INCH LONG	80009	384-1060-00
-160	384-1101-00			1		. EXTENSION SHAFT:4.14 INCH LONG	80009	384-1101-00
-161	384-1560-00			1		EXTENSION SHAFT:4.834 L GL FILLED NYLON	80009	384-1560-00
-162	384-1129-00			5		EXTENSION SHAFT:5.607 INCH LONG	80009	384-1129-00
-163	----- -----			1		CKT BOARD ASSY:VERT PREAMP(SEE A1 EPL)		
						(ATTACHING PARTS)		
-164	211-0244-00			2		SCR,ASSEM WSHR:4-40 X 0.312 INCH,PNH STL	78189	OBD
						- - - * - - -		
	----- -----			-		. CKT BOARD ASSY INCLUDES:		
-165	131-0566-00			2		. BUS CONDUCTOR:DUMMY RES,2.375,22 AWG	55210	L-2007-1
-166	136-0252-07			171		. SOCKET,PIN CONN:W/O DIMPLE	22526	75060-012
-167	136-0260-02			2		. SKT,PL-IN ELEK:MICROCIRCUIT,16 DIP,LOW CLE	71785	133-51-92-008
-168	136-0269-02			2		. SKT,PL-IN ELEK:MICROCIRCUIT,14 DIP,LOW CLE	73803	CS9002-14
-169	131-0608-00			14		. TERMINAL,PIN:0.365 L X 0.025 PH BRZ GOLD	22526	47357
-170	214-0579-00	B010100	B039949	5		. TERM,TEST POINT:BRS CD PL	80009	214-0579-00
	214-0579-02	B039950		5		. TERM,TEST POINT:BRASS	80009	214-0579-02
-171	131-1003-00			10		. CONN,RCPT,ELEC:CKT BD MT,3 PRONG	80009	131-1003-00
-172	----- -----			2		. RES.,VAR,NONWIR:POSITION(SEE R1055,R1558 EPL)		
-173	361-0607-00			2		. SPACER,SWITCH:PLASTIC	80009	361-0607-00
-174	----- -----			2		. RES.,VAR,NONWIR:(SEE R1285 EPL)		

http://manoman.sqhill.com

Fig. & Index No.	Tektronix Part No.	Serial/Model No. Eff	Dscont	Qty	1 2 3 4 5	Name & Description	Mfr Code	Mfr Part Number
2-175	361-0515-00			2		. SPACER,SWITCH:PLASTIC	80009	361-0515-00
-176	----- -----			1		. SW,PUSHBUTTON:BW LIMIT(SEE S1414 EPL)		
-177	----- -----			1		. SW,PUSHBUTTON:INVERT(SEE S1995 EPL)		
-178	361-0411-00			4		. SPACER,PUSH SW:0.13 W X 0.375 INCH L,PLSTC	71590	J64285-00
	334-3448-00			2		MARKER,IDENT:MARKED NOTICE	80009	334-3448-00
	672-0791-00			1		CKT BOARD ASSY:ATTENUATOR	80009	672-0791-00
-179	200-1439-00			2		. COVER,CHASSIS:ATTENUATOR	80009	200-1439-00
						(ATTACHING PARTS)		
-180	213-0055-00			2		. SCR,TPG,THD FOR:2-32 X 0.188 INCH,PNH STL	93907	OBD
-181	210-0938-00			2		. WASHER,FLAT:0.109 ID X 0.25 INCH OD,STL	75497	AN960-3
-182	211-0097-00	B010100	B042994	8		. SCREW,MACHINE:4-40 X 0.312 INCH,PNH STL	83385	OBD
	211-0661-00	B042995		8		. SCREW,MACHINE:4-40 X 0.25 INCH,PNH,STL	83385	OBD
-183	210-0994-00	B010100	B022379	8		. WASHER,FLAT:0.125 ID X 0.25" OD,STL	86928	5714-147-20N
	210-1307-00	B022380		8		. WASHER,LOCK:0.115 ID,SPLIT,0.025 THK	86928	A384-25N
						- - - * - - -		
-184	----- -----			2		. CKT BOARD ASSY:ATTENUATOR(SEE A3 EPL)		
						(ATTACHING PARTS)		
-185	211-0244-00			8		. SCR,ASSEM WSHR:4-40 X 0.312 INCH,PNH STL	78189	OBD
-186	210-0580-00			8		. NUT,PLAIN,HEX.:0.312-32 X 0.474 INCH,BRS	73743	OBD
-187	129-0299-00			8		. POST,ELEC-MECH:HEX,0.333 INCH LONG	80009	129-0299-00
-188	210-1307-00			8		. WASHER,LOCK:0.115 ID,SPLIT,0.025 THK	86928	A384-25N
						- - - * - - -		
	----- -----			-		. . EACH CKT BOARD ASSY INCLUDES:		
-189	131-0679-02			2		. . CONNECTOR,RCPT,:BNC,MALE,3 CONTACT	24931	28JR270-1
						(ATTACHING PARTS)		
-190	220-0695-00			2		. . NUT,PLAIN,DODEC:0.500-28 X 0.90 INCH,BRS	73743	OBD
-191	210-1039-00			2		. . WASHER,LOCK:INT,0.521 ID X 0.625 INCH OD	24931	OBD
						- - - * - - -		
-192	136-0252-07			24		. . SOCKET,PIN CONN:W/O DIMPLE	22526	75060-012
	136-0333-00			2		. . SOCKET,PIN TERM:0.138 INCH LONG	00779	1-331677-4
-193	131-1030-00			10		. . CONT ASSY,ELEC:CAM SWITCH,BOTTOM	80009	131-1030-00
	131-1031-00			10		. . CONTACT ASSY,EL:CAM SWITCH,TOP	80009	131-1031-00
-194	210-3082-00			10		. . EYELET,METALLIC:0.047 OD X 0.133 L,BRASS	80009	210-3082-00
-195	441-1058-02			1		. . CHASSIS,SCOPE:ATTENUATOR	80009	441-1058-02
						(ATTACHING PARTS)		
-196	211-0001-00			2		. . SCREW,MACHINE:2-56 X 0.25 INCH,PNH STL	83385	OBD
-197	210-0053-00			2		. . WASHER,LOCK:INTL,0.092 ID X 0.175"OD,STL	83385	OBD
-198	210-0405-00			2		. . NUT,PLAIN,HEX.:2-56 X 0.188 INCH,BRS	73743	2X12157-402
	210-0845-00			1		. . WASHER,FLAT:0.500 ID X 0.625 INCH OD,STL	89663	634-R
	210-1008-00			2		. . WASHER,FLAT:0.09 ID X 0.188" OD,BRS	12360	OBD
						- - - * - - -		
-199	337-1406-00			1		. . SHLD,ELECTRICAL:CAM CONTACTS	80009	337-1406-00
-200	----- -----			2		CKT BOARD ASSY:PROBE CODING(SEE A9 EPL)		
						(ATTACHING PARTS)		
-201	211-0065-00			2		SCREW,MACHINE:4-40 X 0.188 INCH,PNH STL	77250	OBD
						- - - * - - -		
	----- -----			-		. CKT BOARD ASSY INCLUDES:		
-202	131-0608-00			3		. TERMINAL,PIN:0.365 L X 0.025 PH BRZ GOLD	22526	47357
-203	----- -----			1		. CKT BOARD ASSY:VERT MODE SW(SEE A5 EPL)		
						(ATTACHING PARTS)		
-204	211-0244-00			1		. SCR,ASSEM WSHR:4-40 X 0.312 INCH,PNH STL	78189	OBD
-205	129-0457-00			1		. SPACER,POST:1.07L,W/4-40 TAP 1 END	80009	129-0457-00
						- - - * - - -		
	----- -----			-		. . CKT BOARD ASSY INCLUDES:		
-206	131-0589-00			8		. . TERM,PIN:0.46 L X 0.025 SQ.PH BRZ GL	22526	47350
	131-0608-00			21		. . TERMINAL,PIN:0.365 L X 0.025 PH BRZ GOLD	22526	47357
-207	136-0252-07			18		. . SOCKET,PIN CONN:W/O DIMPLE	22526	75060-012
-208	136-0269-02			1		. . SKT,PL-IN ELEK:MICROCIRCUIT,14 DIP,LOW CLE	73803	CS9002-14
-209	337-0896-00			2		. . PLATE,ELEC SHLD:CKT BOARD MOUNT,BRS	80009	337-0896-00
-210	----- -----			1		. . SWITCH,PB:(SEE S5210 EPL)		
-211	361-0411-00			4		. . SPACER,PUSH SW:0.13 W X 0.375 INCH L,PLSTC	71590	J64285-00
-212	105-0243-00			2		. . ACTUATOR,SWITCH:AC,DC	80009	105-0243-00
						(ATTACHING PARTS)		
-213	213-0214-00			2		. . SCREW,CAP SCH:2-56 X 0.375"HEX HD STL	70278	OBD
						- - - * - - -		

http://manoman.sqhill.com

Fig. & Index No.	Tektronix Part No.	Serial/Model No. Eff	Dscont	Qty	1 2 3 4 5	Name & Description	Mfr Code	Mfr Part Number
2-	263-1065-00			2		. . . SW CAM ACTR AS:VOLTS/DIV	80009	263-1065-00
	----- -----			-		. . . EACH CAM SW ACTR INCLUDES:		
-214	131-0963-00			1		. . . CONTACT,ELEC:GROUNDING	000EX	OBD
-215	210-0406-00			2		. . . NUT,PLAIN,HEX.:4-40 X 0.188 INCH,BRS	73743	2X12161-402
-216	214-1139-02			2		. . . SPRING,FLAT:GREEN COLORED	80009	214-1139-02
-217	214-1752-00			2		. . . ROLLER,DETENT:	80009	214-1752-00
-218	401-0180-00			1		. . . BEARING,CAM SW:FRONT	80009	401-0180-00
						(ATTACHING PARTS)		
-219	354-0390-00			1		. . . RING,RETAINING:0.338 ID X 0.025" THK,STL	79136	5100-37MD
						- - - * - - -		
-220	384-0878-02			1		. . . SHAFT,CAM SW:	80009	384-0878-02
-221	105-0282-01			1		. . . ACTUATOR,CAM SW:DC,GND,AC	80009	105-0282-01
-222	210-1189-00			1		. . . WASHER,FLAT:0.195 ID X 0.367 INCH OD,BRS	51316	OBD
	214-2043-00			1		. . . SPRING,HLCPS:CONICAL,0.20 INCH LONG	80009	214-2043-00
-223	210-0406-00			4		. . . NUT,PLAIN,HEX.:4-40 X 0.188 INCH,BRS	73743	2X12161-402
-224	401-0178-00			1		. . . BEARING,CAM SW:CENTER/REAR	80009	401-0178-00
						(ATTACHING PARTS)		
-225	354-0443-00			1		. . . RING,RETAINING:0.328 FREE IDX 0.448 OD	97464	200-37
						- - - * - - -		
226	384-0880-00			1		. . . SHAFT,CAM SW:REAR	80009	384-0880-00
-227	105-0521-00			1		. . . ACTUATOR,CAM SW:ATTEN	80009	105-0521-00
-228	210-0406-00			4		. . . NUT,PLAIN,HEX.:4-40 X 0.188 INCH,BRS	73743	2X12161-402
-229	214-1139-02			1		. . . SPRING,FLAT:GREEN COLORED	80009	214-1139-02
	214-1139-03			1		. . . SPRING,FLAT:RED COLORED	80009	214-1139-03
-230	214-1752-00			1		. . . ROLLER,DETENT:	80009	214-1752-00
-231	401-0180-00			1		. . . BEARING,CAM SW:FRONT	80009	401-0180-00
-232	348-0253-00			1		GROMMET,PLASTIC:BLACK,OBLONG,3.0X0.925	80009	348-0253-00
-233	407-1127-00			1		BRACKET,PREAMP:REAR,BRASS CU-SN-ZN PL	80009	407-1127-00
						(ATTACHING PARTS)		
-234	210-0586-00			2		NUT,PL,ASSEM WA:4-40 X 0.25,STL CD PL	83385	211-041800-00
						- - - * - - -		
-235	----- -----			1		CKT BOARD ASSY:VERT OUTPUT(SEE A2 EPL)		
						(ATTACHING PARTS)		
-236	211-0244-00			2		SCR,ASSEM WSHR:4-40 X 0.312 INCH,PNH STL	78189	OBD
						- - - * - - -		
	----- -----			-		. CKT BOARD ASSY INCLUDES:		
-237	131-0566-00			1		. BUS CONDUCTOR:DUMMY RES,2.375,22 AWG	55210	L-2007-1
-238	136-0514-00			1		. SKT,PL-IN ELEC:MICROCIRCUIT,8 DIP	73803	CS9002-8
-239	131-0608-00			6		. TERMINAL,PIN:0.365 L X 0.025 PH BRZ GOLD	22526	47357
-240	136-0252-07			41		. SOCKET,PIN CONN:W/O DIMPLE	22526	75060-012
-241	----- -----			1		. MICROCIRCUIT:(SEE U2260 EPL)		
-242	407-1149-00			1		. BRACKET,GND:MICROCIRCUIT,BRASS	80009	407-1149-00
						(ATTACHING PARTS)		
-243	220-0456-00			1		NUT,PLAIN,HEX.:6-32 X 0.25 INCH,STL	73743	9038
-244	210-0055-00			1		WASHER,LOCK:SPLIT,0.145 ID X 0.253 OD,STL	83385	OBD
						- - - * - - -		
-245	361-0008-00			3		SPACER,SLEEVE:0.11 ID X 0.25 OD X 0.28"H	80009	361-0008-00
-246	210-0202-00			1		TERMINAL,LUG:0.146 ID,LOCKING,BRZ TINNED	78189	2104-06-00-2520N
						(ATTACHING PARTS)		
-247	211-0507-00			1		SCREW,MACHINE:6-32 X 0.312 INCH,PNH STL	83385	OBD
						- - - * - - -		
	386-4225-00			1		SUPPORT,CLAMP:ALUMINUM	80009	386-4225-00
-248	407-1128-00			1		BRKT,CRT SHIELD:REAR,NYLON	80009	407-1128-00
						(ATTACHING PARTS)		
-249	211-0507-00			2		SCREW,MACHINE:6-32 X 0.312 INCH,PNH STL	83385	OBD
-250	220-0419-00			2		NUT,PLAIN,SQ:6-32 X 0.312 INCH,STL	83385	OBD
-251	210-0803-00			1		WASHER,FLAT:0.15 ID X 0.032 THK,STL CD PL	12327	OBD
-252	210-0202-00			1		TERMINAL,LUG:0.146 ID,LOCKING,BRZ TINNED	78189	2104-06-00-2520N
-253	210-0457-00			1		NUT,PL,ASSEM WA:6-32 X 0.312 INCH,STL	83385	OBD
						- - - * - - -		
-254	343-0217-00			1		CLAMP,COIL:Y-AXIS	80009	343-0217-00
						(ATTACHING PARTS)		
-255	211-0147-00			2		SCREW,MACHINE:4-40 X 0.25 INCH,PNH STL	83385	OBD
-256	210-0994-00			2		WASHER,FLAT:0.125 ID X 0.25" OD,STL	86928	5714-147-20N
						- - - * - - -		

http://manoman.sqhill.com

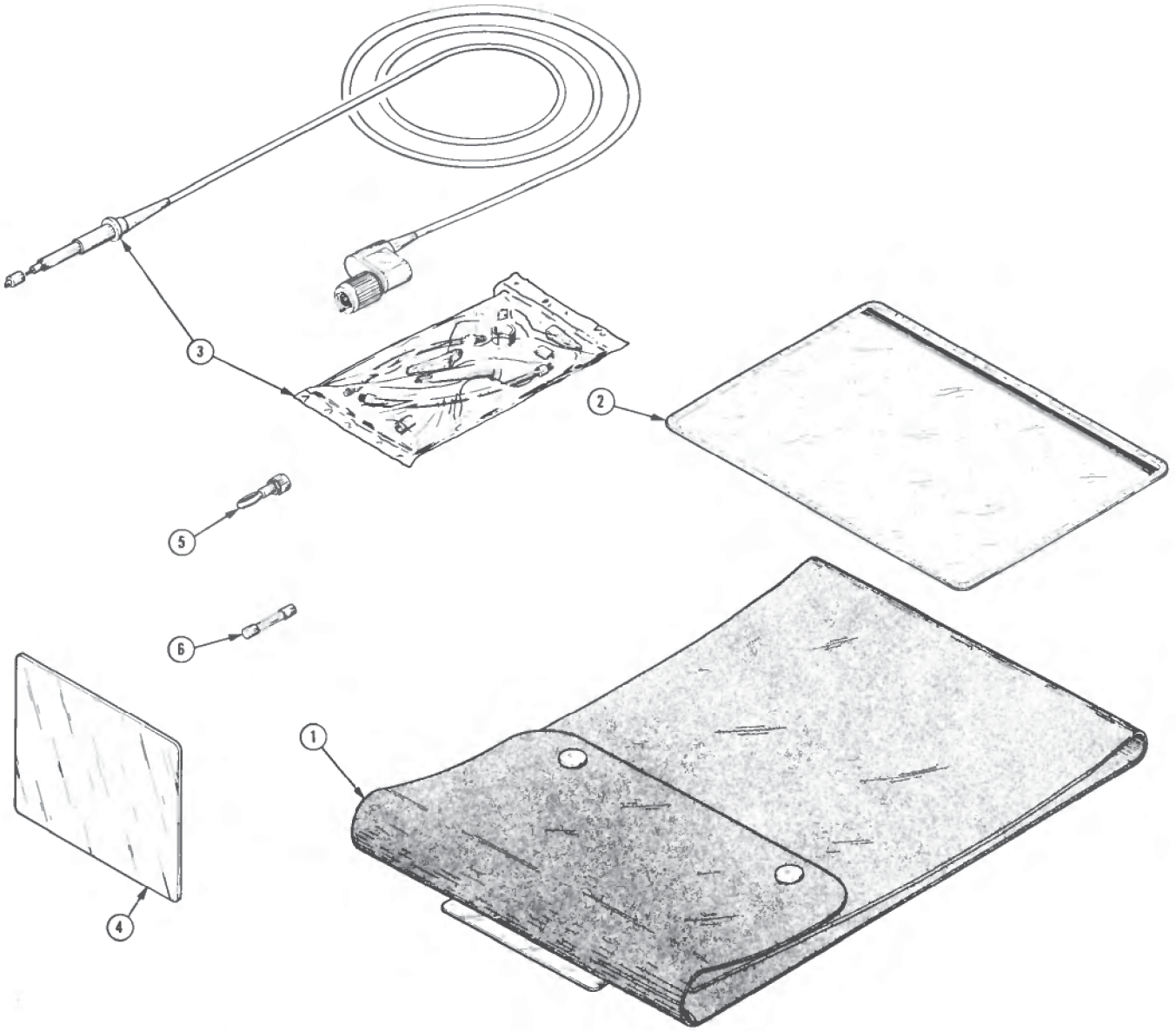

Fig. & Index No.	Tektronix Part No.	Serial/Model No. Eff	Dscont	Qty	1 2 3 4 5	Name & Description	Mfr Code	Mfr Part Number
5-1	016-0535-02			1		POUCH,ACCESSORY:W/HARDWARE,STANDARD	80009	016-0535-02
	016-0594-00			1		POUCH,ACCESSORY:W/HARDWARE,(WITH DM)	80009	016-0594-00
-2	016-0537-00			1		POUCH,ACCESSORY:VINYL,W/ZIPPER	05006	OBD
-3	010-6105-03			2		PROBE,VOLTAGE:P6105,2 METER,10X,W/ACCESS	80009	010-6105-03
	010-6430-00			1		LEAD,TEST:1.5 METERS LONG,TEMP(WITH DM44)	80009	010-6430-00
-4	337-1674-01			1		SHLD,IMPLOSION:CLEAR	80009	337-1674-01
-5	134-0016-01			1		PLUG,TIP:W/BINDING POST	80009	134-0016-01
-6	159-0016-00			2		FUSE,CARTRIDGE:3AG,1.5A,250V,FAST-BLOW	71400	AGC 1 1/2
	----- -----			-		* FOR 115V OPERATION		
	159-0042-00			1		FUSE,CARTRIDGE:3AG,0.75A,250V,FAST-BLOW	71400	AGC 3/4
	----- -----			-		* FOR 230V OPERATION		
	161-0094-00			1		CABLE ASSY,PWR:3 WIRE,36 INCHES LONG	16428	KH7667
	----- -----			-		* OPTION 7 ONLY		
	003-0120-00			1		LEAD,TEST:PAIR(WITH DM)	80009	003-0120-00
	070-2756-00			1		MANUAL,TECH:OPERATORS,465B W/DM44	80009	070-2756-00
	070-2757-00			1		MANUAL,TECH:SERVICE,465B	80009	070-2757-00
	070-2036-01			1		MANUAL,TECH:SERVICE,DM44	80009	070-2036-01

http://manoman.sqhill.com

Fig. & Index No.	Tektronix Part No.	Serial/Model No. Eff	Dscont	Qty	1 2 3 4 5	Name & Description	Mfr Code	Mfr Part Number
2-257	----- -----			1		COIL,DEFLECTION:Y-AXIS(SEE L14165 EPL)		
-258	348-0145-00			1		GROMMET,PLASTIC:U-SHP,1.0 X 0.42 INCH	80009	348-0145-00
-259	200-1459-00			1		COVER,CRT:REAR	80009	200-1459-00
						(ATTACHING PARTS)		
-260	211-0244-00			2		SCR,ASSEM WSHR:4-40 X 0.312 INCH,PNH STL	78189	OBD
						- - - * - - -		
-261	386-2246-00			1		SUPPORT,CRT:REAR	80009	386-2246-00
-262	337-1644-00			1		SHLD,ELECTRICAL:CRT NECK	80009	337-1644-00
	198-4146-00			1		WIRE SET,ELEC:	80009	198-4146-00
-263	175-0825-00			FT		. WIRE,ELECTRICAL:2 WIRE RIBBON	80009	175-0825-00
-264	175-0826-00			FT		. WIRE,ELECTRICAL:3 WIRE RIBBON	80009	175-0826-00
-265	175-0827-00			FT		. CABLE,SP,ELEC:4,26 AWG,STRD,PVC JKT,RBN	08261	SS04267(1061)0C
-266	175-0828-00			FT		. WIRE,ELECTRICAL:5 WIRE RIBBON	08261	SS-0526-710610C
-267	175-0829-00			FT		. WIRE,ELECTRICAL:6 WIRE RIBBON	08261	SS-0626-710610C
-268	175-0830-00			FT		. WIRE,ELECTRICAL:7 WIRE RIBBON	08261	SS-0726-710610C
-269	131-0707-00			111		. CONNECTOR,TERM.:22-26 AWG,BRS& CU BE GOLD	22526	47439
	131-0472-00			4		. CONNECTOR,PIN:FEMALE	000GE	OBD
-270	352-0169-00			14		. HLDR,TERM CONN:2 WIRE BLACK	80009	352-0169-00
-271	352-0161-00			8		. HLDR,TERM CONN:3 WIRE BLACK	80009	352-0161-00
-272	352-0162-00	B010100	B010799	1		. HLDR,TERM CONN:4 WIRE BLACK	80009	352-0162-00
	352-0162-01	B010800		1		. CONN BODY,PL,EL:4 WIRE BROWN	80009	352-0162-01
-273	352-0163-00			3		. CONN BODY,PL,EL:5 WIRE BLACK	80009	352-0163-00
-274	352-0164-00			3		. CONN BODY,PL,EL:6 WIRE BLACK	80009	352-0164-00
-275	352-0165-00			3		. CONN BODY,PL,EL:7 WIRE BLACK	80009	352-0165-00
-276	352-0166-00			1		. CONN BODY,PL,EL:8 WIRE BLACK	80009	352-0166-00
	195-0528-00	XB010850		1		LEAD ELECTRICAL:22 AWG,2.0 L,0-N	80009	195-0528-00

http://manoman.sqhill.com

MANUAL CHANGE INFORMATION

At Tektronix, we continually strive to keep up with latest electronic developments by adding circuit and component improvements to our instruments as soon as they are developed and tested.

Sometimes, due to printing and shipping requirements, we can't get these changes immediately into printed manuals. Hence, your manual may contain new change information on following pages.

A single change may affect several sections. Since the change information sheets are carried in the manual until all changes are permanently entered, some duplication may occur. If no such change pages appear following this page, your manual is correct as printed.

SERVICE NOTE

Because of the universal parts procurement problem, some electrical parts in your instrument may be different from those described in the Replaceable Electrical Parts List. The parts used will in no way alter or compromise the performance or reliability of this instrument. They are installed when necessary to ensure prompt delivery to the customer. Order replacement parts from the Replaceable Electrical Parts List.

http://manoman.sqhill.com

CALIBRATION TEST EQUIPMENT REPLACEMENT

Calibration Test Equipment Chart

This chart compares TM 500 product performance to that of older Tektronix equipment. Only those characteristics where significant specification differences occur, are listed. In some cases the new instrument may not be a total functional replacement. Additional support instrumentation may be needed or a change in calibration procedure may be necessary.

Comparison of Main Characteristics

DM 501 replaces 7D13		
PG 501 replaces 107	PG 501 - Risetime less than 3.5 ns into 50 Ω.	107 - Risetime less than 3.0 ns into 50 Ω.
108	PG 501 - 5 V output pulse; 3.5 ns Risetime.	108 - 10 V output pulse; 1 ns Risetime.
111	PG 501 - Risetime less than 3.5 ns; 8 ns Pretrigger pulse delay.	111 - Risetime 0.5 ns; 30 to 250 ns Pretrigger Pulse delay.
114	PG 501 - ±5 V output.	114 - ±10 V output. Short proof output.
115	PG 501 - Does not have Paired, Burst, Gated, or Delayed pulse mode; ±5 V dc Offset. Has ±5 V output.	115 - Paired, Burst, Gated, and Delayed pulse mode; ±10 V output. Short-proof output.
PG 502 replaces 107		
108	PG 502 - 5 V output	108 - 10 V output.
111	PG 502 - Risetime less than 1 ns; 10 ns Pretrigger pulse delay.	111 - Risetime 0.5 ns; 30 to 250 ns Pretrigger pulse delay.
114	PG 502 - ±5 V output	114 - ±10 V output. Short proof output.
115	PG 502 - Does not have Paired, Burst, Gated, Delayed & Undelayed pulse mode; Has ±5 V output.	115 - Paired, Burst, Gated, Delayed & Undelayed pulse mode; ±10 V output. Short-proof output.
2101	PG 502 - Does not have Paired or Delayed pulse. Has ±5 V output.	2101 - Paired and Delayed pulse; 10 V output.
PG 506 replaces 106	PG 506 - Positive-going trigger output signal at least 1 V; High Amplitude output, 60 V.	106 - Positive and Negative-going trigger output signal, 50 ns and 1 V; High Amplitude output, 100 V.
067-0502-01	PG 506 - Does not have chopped feature.	0502-01 - Comparator output can be alternately chopped to a reference voltage.
SG 503 replaces 190, 190A, 190B	SG 503 - Amplitude range 5 mV to 5.5 V p-p.	190B - Amplitude range 40 mV to 10 V p-p.
191	SG 503 - Frequency range 250 kHz to 250 MHz.	191 - Frequency range 350 kHz to 100 MHz.
067-0532-01	SG 503 - Frequency range 250 kHz to 250 MHz.	0532-01 - Frequency range 65 MHz to 500 MHz.
TG 501 replaces 180, 180A	TG 501 - Marker outputs, 5 sec to 1 ns. Sinewave available at 5, 2, and 1 ns. Trigger output - slaved to marker output from 5 sec through 100 ns. One time-mark can be generated at a time.	180A - Marker outputs, 5 sec to 1 μs. Sinewave available at 20, 10, and 2 ns. Trigger pulses 1, 10, 100 Hz; 1, 10, and 100 kHz. Multiple time-marks can be generated simultaneously.
181	TG 501 - Marker outputs, 5 sec to 1 ns. Sinewave available at 5, 2, and 1 ns.	181 - Marker outputs, 1, 10, 100, 1000, and 10,000 μs, plus 10 ns sinewave.
184	TG 501 - Marker outputs, 5 sec to 1 ns. Sinewave available at 5, 2, and 1 ns. Trigger output - slaved to marker output from 5 sec through 100 ns. One time-mark can be generated at a time.	184 - Marker outputs, 5 sec to 2 ns. Sinewave available at 50, 20, 10, 5, and 2 ns. Separate trigger pulses of 1 and .1 sec; 10, 1, and .1 ms; 10 and 1 μs. Marker amplifier provides positive or negative time marks of 25 V min. Marker intervals of 1 and .1 sec; 10, 1, and .1 ms; 10 and 1 μs.
2901	TG 501 - Marker outputs, 5 sec to 1 ns. Sinewave available at 5, 2, and 1 ns. Trigger output - slaved to marker output from 5 sec through 100 ns. One time-mark can be generated at a time.	2901 - Marker outputs, 5 sec to 0.1 μs. Sinewave available to 50, 10, and 5 ns. Separate trigger pulses, from 5 sec to 0.1 μs. Multiple time-marks can be generated simultaneously.

NOTE: All TM 500 generator outputs are short-proof. All TM 500 plug-in instruments require TM 500-Series Power Module.

REV. A, OCT 1975

http://manoman.sqhill.com

Tektronix®
COMMITTED TO EXCELLENCE

MANUAL CHANGE INFORMATION

Date: 8-13-80 Change Reference: M40609

Product: 465B SERVICE SN B046449 Manual Part No.: 070-2757-00

DESCRIPTION

REPLACEABLE ELECTRICAL PARTS LIST AND SCHEMATIC CHANGES

CHANGE TO:

A1	670-5997-03	CKT BOARD ASSY:VERTICAL PREAMP
A1R1035	315-0271-00	RES.,FXD,CMPSN:270 OHM,5%,0.25W

A1R1035 is located on the A1 VERTICAL PREAMP board and is shown on CH 1 VERTICAL PREAMP diagram 1.

http://manoman.sqhill.com

Tektronix®
COMMITTED TO EXCELLENCE

MANUAL CHANGE INFORMATION

Date: 8-27-80 Change Reference: M39087

Product: 465B SERVICE EFF SN B045775-UP Manual Part No.: 070-2757-00

DESCRIPTION

REPLACEABLE ELECTRICAL PARTS AND SCHEMATIC CHANGES

CHANGE TO:

A1	670-5997-01	CKT BOARD ASSY:VERTICAL PREAMP
A1Q1028	151-0438-00	TRANSISTOR:SILICON,PNP,MPSH81

ADD:

A1C1906	281-0799-00	CAP.,FXD,CER DI:62PF,2%,100V

Above components apply to the A1 VERTICAL PREAMP board. Q1028 is located on CH 1 VERTICAL PREAMP diagram 1 and C1906 is added in parallel with R1906 on VERTICAL SWITCHING LOGIC diagram 3.

NOTE

The new Q1028 emitter and base leads are transposed with respect to previous version (leads must be crossed to fit existing socket).

http://manoman.sqhill.com

Tektronix®
COMMITTED TO EXCELLENCE

MANUAL CHANGE INFORMATION

Date: 2-20-80 Change Reference: M38666

Product: 465B SERVICE SN B039950-UP Manual Part No.: 070-2757-00

DESCRIPTION

ELECTRICAL PARTS LIST AND SCHEMATIC CHANGES

REMOVE:

A7C7192 281-0773-00 CAP.,FXD,CER DI:0.01UF,10%,100V

C7192 is removed from the A7 TRIGGER GEN & SWEEP LOGIC board and SWEEP & Z-AXIS LOGIC diagram 7.

http://manoman.sqhill.com

Tektronix®
COMMITTED TO EXCELLENCE

MANUAL CHANGE INFORMATION

Date: 6-17-80 Change Reference: M40219

Product: 465B SERVICE SN B045400-up Manual Part No.: 070-2757-00

DESCRIPTION

465B OPTION 05 ELECTRICAL PARTS LIST AND SCHEMATIC CHANGES

CHANGE TO:

C13009 (CH 1 & CH 2)	SELECTED AND ADDED WHEN REQUIRED (VALUE BETWEEN 0.0 PF AND 0.8 PF TO PROVIDE TOTAL INPUT CAPACITANCE OF ≈ 24 PF FOR OPTION 05 INSTRUMENTS)

http://manoman.sqhill.com