A1500

TEAC®

A-1500 / A-1600

STEREOPHONIC
TAPE RECORDER

SERVICE MANUAL

TEAC CORPORATION

TABLE OF CONTENTS

CONTROLS AND SWITCHES 1

DISASSEMBLY 4

TAPE TRANSPORT CONTROL FUNCTIONS 6

MECHANICAL ADJUSTMENTS 7

ALIGNMENT AND PERFORMANCE CHECKS 10

MAINTENANCE 16

TROUBLE SHOOTING 17

EXPLODED VIEW

AMPLIFIER PRINTED CIRCUIT BOARD

SCHEMATIC DIAGRAM

CONTROLS AND SWITCHES (Ref. Fig. 1)

1. Tape transport mechanism
2. Amplifier
3. AC POWER IN: Power cord receptacle
4. Remote Control: Remote control socket; a dummy plug is inserted when remote control plug is not in use.
5. Fuse 2 Amp.: Replace only with 2 ampere fuse.

6A. LINE INPUT A: Line input jack for Channel A

6B. LINE INPUT B: Line input jack for Channel B

Phono preamplifier, tuner and other sources may be connected to this input.

7A. OUTPUT A: Output jack for Channel A

7B. OUTPUT B: Output jack for Channel B

8. Monitor: Jack for high impedance stereo head-phone
9. Left reel turntable
10. Left reel turntable shaft
11. Right reel turntable
12. Right reel turntable shaft
13. Index counter: for numerical reference within a reel of tape
14. Reverse sensing post: provides automatic and manual reverse play function.
15. Head assembly
16. Tape lifter: lifts tape from heads during fast wind operations.
17. Transport selector switches: select tape operation, ◀◀ (rewind), STOP, ▶▶ (fast foward), PLAY, REC (record).
18. Capstan: drives tape for recording and playback.
19. Pinch roller: engages tape to capstan during recording and playback.
20. Automatic shut-off lever: shuts off power to transport when tape runs out, and also restores transport selector switches to a neutral mode.
21. TAPE SPEED: Tape speed selector pushbutton switch; electrically changes motor speed and selects appropriate equalizer circuit.
22. RECORD SELECTOR: selects various recording functions.

CHAN A;	for monophonic recording on Channel A
CHAN B;	for monophonic recording on Channel B
STEREO;	for stereophonic recording on Channels A and B, both A and B are depressed
ADD 1;	for sound-on-sound recording (Channels A to B)
ADD 2;	for sound-on-sound recording (Channels B to A)
STEREO ECHO;	for stereo echo effect when both ADD 1 and ADD 2 are depressed
SAFETY;	safety interlock switch to prevent accidental erasure, also used to restore record selectors to neutral mode

23. POWER: AC power switch turns recorder on or off.

24. MONITOR:

SOURCE position; The input signal to be recorded can be reproduced through headphone or speaker system while the VU meter indicates the level.

TAPE position; During playback or while recording, recorded signal on the tape can be reproduced as above.

25. Record Indicators: Indicate energizing of record and erase circuits, and the record mode which has been selected.

26. Level Indicators: VU type dual meter, indicates record level or playback output level dependent on the position of monitor selector.
The dual meter indcates correct levels for recording playback without regard to the setting of the output level control. With the MONITOR selector in SOURCE position, meter indication of zero VU (0 VU) represents that the output level is 1 volt when the control is at maximum (clockwise) position.

27A. OUTPUT: Output level control for Channel A

27B. OUTPUT: Output level control for Channel B

28A. LINE INPUT: Line input level control for Channel A

28B. LINE INPUT: Line input level control for Channel B

29A. MIC INPUT: Microphone input level control for Channel A

29B. MIC INPUT: Microphone input level control for Channel B

NOTE: Level controls shown (27) (28) and (29) above are dual potentiometers, and inner knob (Channel A) is friction coupled with outer knob (Channel B). May be operated together or separately.

30A. MIC IN: Microphone input jack for Channel A

30B. MIC IN: Microphone input jack for Channel B

31. Reel Holders

32. REC/PB: Line inputs and outputs socket for DIN connection.

33· Tension arm

34A. Speaker amplifier A: Jack for Channel A speaker amplifier (A-1600)

34B. Speaker amplifier B: Jack for Channel B speaker amplifier (A-1600)

36A. TONE: Channel A tone control (A-1600)

36B. TONE: Channel B tone control (A-1600)

MODEL A-1600

The Model A-1600 controls and switches are identical with the A-1600, except the model A-1600 has jack (Fig. 1) for the external speaker-amplifiers which are equipped with the unit. These jacks are for connection of the power supply in the recorder and the audio output to the amplifier-speaker and are not to be used for any other connection, or serious damage to the recorder may result. DO NOT PLUG ANY OTHER SPEAKERS OR ACCESSORY EQUIPMENT INTO THESE JACKS OTHER THAN THE AMPLIFIER-SPEAKERS PROVIDED WITH THE UNIT (A-1600).

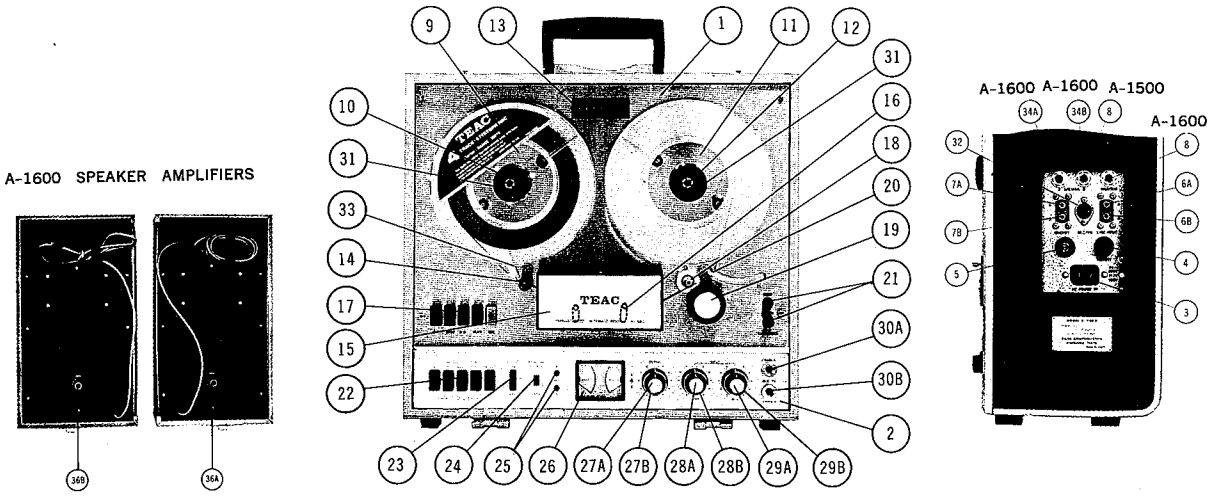

FIG. 1 CONTROLS AND SWITCHES

DISASSEMBLY

REMOVING UNIT FROM CASE

1. Remove power cord, remote or shorting plug and audio cables.
2. Remove the lid.
3. Lay the recorder face down on a soft mat.
4. Turn the recorder and lay the recorder face up on a soft mat.
5. Remove the following parts and hardware (see Fig. 3).
   - Pinch roller (3)
   - Dust Cap (2)
   - Reel Tables (7) (left and right) by removing three (each) screws (6)
   - Head hausing (5) by removing screw (4)
   - Four mounting screws (8)
   - Face plate (9)
   - Five mounting screws (10) and washers (11)
   - Two mounting screws (12) and washer (13)
6. Place recorder in horizontal position then remove the deck from case (15)

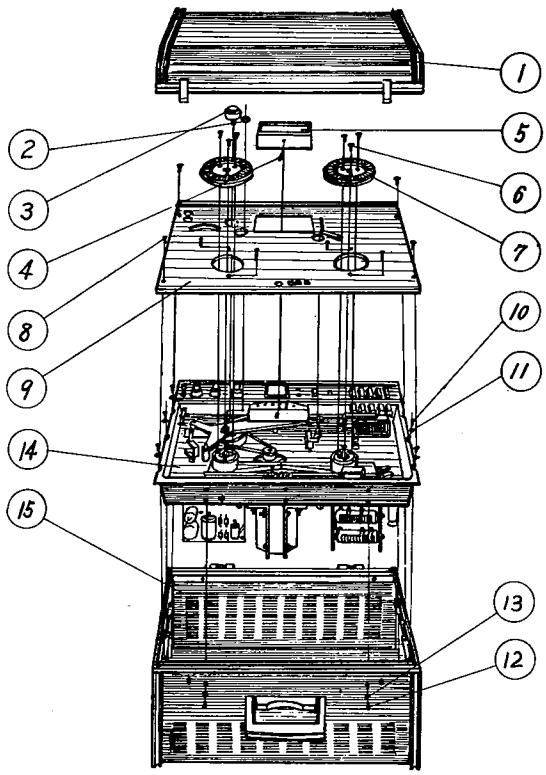

FIG. 3 REMOVING UNIT FROM CASE

REMOVING AMPLIFIER FROM TRANSPORT

Refer to Figure 4.

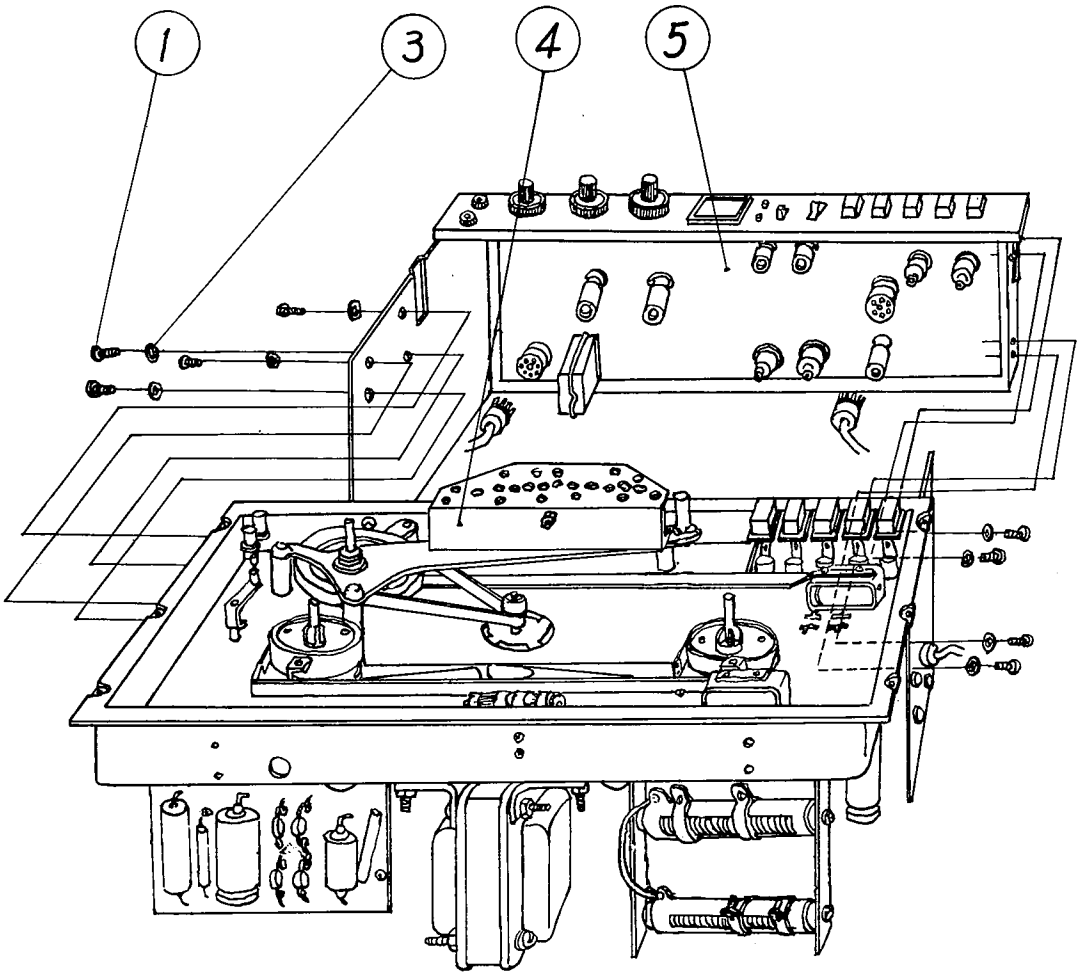

FIG. 4 REMOVING AMPLIFIER FROM TRANSPORT

TAPE TRANSPORT CONTROL FUNCTIONS

TAPE SPEED SELECTOR (21)

This is a rotary switch operated by two pushbuttons. It selects either high (7½ ips) or low (3¾ ips) speed of drive motor. The Tape Speed selector switch also changes record equalization, and playback equalization for the selected speed.

TRANSPORT SELECTOR (17)

Electro-mechanical pushbutton switches provide positive tape feed which prevents spilling from reels. The selector pushbuttons are automatically released by solenoid when the shut-off switch is operated. The pushbuttons operate the transport for the following functions.

1. REWIND

   When the REWIND button (marked ◁◁) is depressed,

   a. Brake solenoid is energized, freeing the turntables.
   b. Full AC line voltage is supplied to the left reel motor.
   c. The pinch roller solenoid is not energized.

2. STOP

   Depressing the STOP pushbutton mechanically releases only previously selected pushbuttons thereby restoring the electrical circuits to neutral. It must be remembered that deenergization of the brake solenoid results in the application of brakes to the reel turntable.

3. FAST FORWARD

   When the FAST FORWARD button (marked ▶▶) is depressed, similar functions are performed as described in REWIND operation. However, the voltage supplying arrangements are reversed.

4. PLAY

   When the PLAY button is depressed,

   a. The brake solenoid is energized, freeing the turntables.
   b. Reduced voltages are supplied to the left and right reel motors through resistors R 204 and R 205 respectively.
   c. The pinch roller solenoid is energized, and the pinch roller clamps the tape to the capstan.

5. RECORD

   When the REC button is depressed, the record circuits are energized provided the play button is depressed simultaneously.

REVERSE SENSING POST (14)

When the sensing post is operated (automatically or manually), reverse relay (K1) is energized.

a. Reverses direction of drive motor rotation by switching start coil polarity.
b. Reverses reduced voltage supply arrangements to the left and right reel motors.
c. Energizes head selector relay, which switches connections from the forward playback head to the reverse playback head.

MECHANICAL ADJUSTMENTS

PINCH ROLLER PRESSURE ADJUSTMENT

The pinch roller is forced against the capstan by the action of pinch roller solenoid (58, Fig. 5). Pinch roller pressure is supplied by the pinch roller pressure spring, and is adjusted by a lock nut on the capstan solenoid spade bolt (31, Fig. 5).
The recommended procedure for adjusting pinch roller pressure is as follows.

1. Hold the shut-off lever so that the shut-off lever switch is held in the operated position (A rubber band is convenient for this purpose).
2. With the POWER switch in the ON position, press the PLAY button, and note whether the capstan solenoid plunger is bottomed. The pressure against the capstan shaft should be approximately 5.2 pounds.
3. If it is desired to measure pinch roller pressure, press the STOP button, and using a string about 20 inches long, tied in a loop slip the loop between the pinch roller and roller arm so that the string rests against the pinch roller shaft.
4. Attach the other side of the loop to a 0 to 8 pounds scale, letting the string remain slack.
5. Depress the PLAY pushbutton, causing the pinch roller to clamp against the capstan.
6. Pull the scale away so that the string is taut and makes a 90 degree angle with the pinch roller arm.
7. Slowly pull the scale away with sufficient power to cause the pinch roller to leave the capstan, reading the scale at the instant the pinch roller leaves the capstan. The scale reading should be 5 ~ 5.5 pounds. If necessary, adjust the nut (28) shown in Fig. 5.

NOTE: Reduced pinch roller pressure can result from either two extremes of adjustment. Remember that maximum efficiency is obtained from the solenoid only when it's plunger is "bottomed".

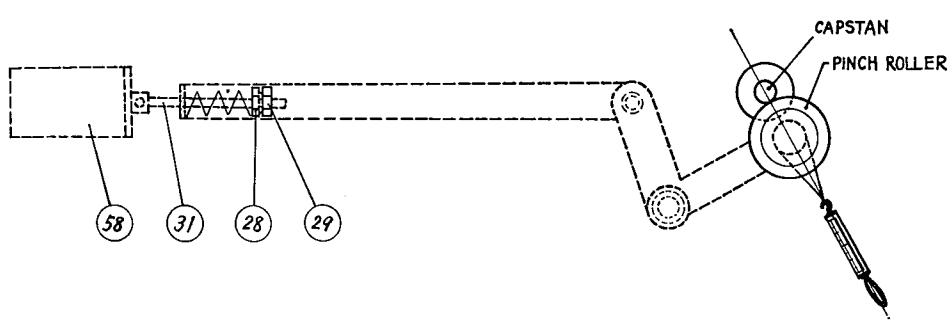

FIG. 5 PINCH ROLLER PRESSURE ADJUSTMENT

TAKE-UP AND SUPPLY TENSION ADJUSTMENTS

Take-up and supply tension in forward and reverse play mode are determined by the positioning of the sliders on resistors R 204 and R 205 located in the tape transport control chassis (Fig. 6). The torque of both the left and right reel motors must be adjusted as follows.

	left motor	right motor
forward play	4.1 ± 0.7 in-oz	4.1 ± 0.7 in-oz
reverse play	4.1 ± 0.7 in-oz	4.1 ± 0.7 in-oz

1. Place an empty 7 inch reel having 4 inch diameter hud on the tape supply turntable.
2. Turn on the power switch.
3. Block the shut-off lever switch in the operated position.
4. Make small loops at both ends of a 30 inch piece of string.
5. Attach one loop to the tape anchor on the reel hud and the other to a 0 to 4 oz. spring scale.
6. Operate the PLAY button and allow the clockwise motion of the left reel to draw a turn of twine onto the hub.
7. Make certain that the string in now parallel to the plane of the top of the tape transport and that the string is centered and not touching either reel flange.
8. Let the reel motor pull the string slowly onto the hub by following the torque motor force with the scale while observing the readings on the scale until a constant reading is obtained.
9. If necessary, adjust the slide A on resistor R 204 in the control chassis until a scale reading between 1.4 and 2.1 ounces is achieved.
10. Next operate the reverse switch lever, then check the torque using the same procedure as above. However, spring scale motion are reversed (See Fig. 6), The scale should be indicated approximately 1.7 ~ 2.4 ounces by adjusting the slide B on resistor R 204.
11. Use the procedures in the preceding steps to check and adjust the right reel motor tension which are set by the slide B on R 205 (approx. 1.7 ~ 2.4 oz.) for forward play, or slide A on R 205 (approx. 1.4 ~ 2.1 oz.) for reverse play (Not that the reel on this side will rotate only in counterclockwise direction).

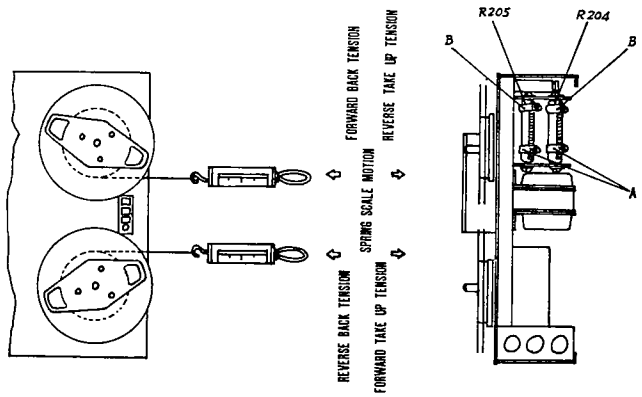

FIG. 6 TAKE-UP AND SUPPLY TENSION ADJUSTMENTS

BRAKE ADJUSTMENT

Brake adjustment is made (with no power applied to the equipment) at the point shown in Fig. 7.

1. Place an empty 7 inch reel having 4 inch diameter hub on the left reel turntable.
2. Make small loops at both ends of a 30 inch string.
3. Attach one loop to the tape anchor on the reel hub and the other to a 0 ~ 10 oz. spring scale.
4. Wind several turns of string onto the hub, counterclockwise.
5. Pull the scale, making certain that the string does not touch either flange of the reel. The turntable will rotate counterclockwise. Take a reading only when the turntable is in steady motion, as the force required to overcome the static friction will produce a false and excessively high initial reading.
6. Adjust the left motor brake by the position of the brake adjusting plate (54, Fig. 7 for a scale reading of approximately 5.5 ~ 7 ounces (11 ~ 14 in-oz.).
7. To adjust the brake on the right reel turntable, repeat the entire procedure as described for the left reel turntable, with the exception that all directions of rotation are reversed.

NOTE: The difference in reading of the right and left reel turntable brakes should be kept within 2.8 inch-ounces.

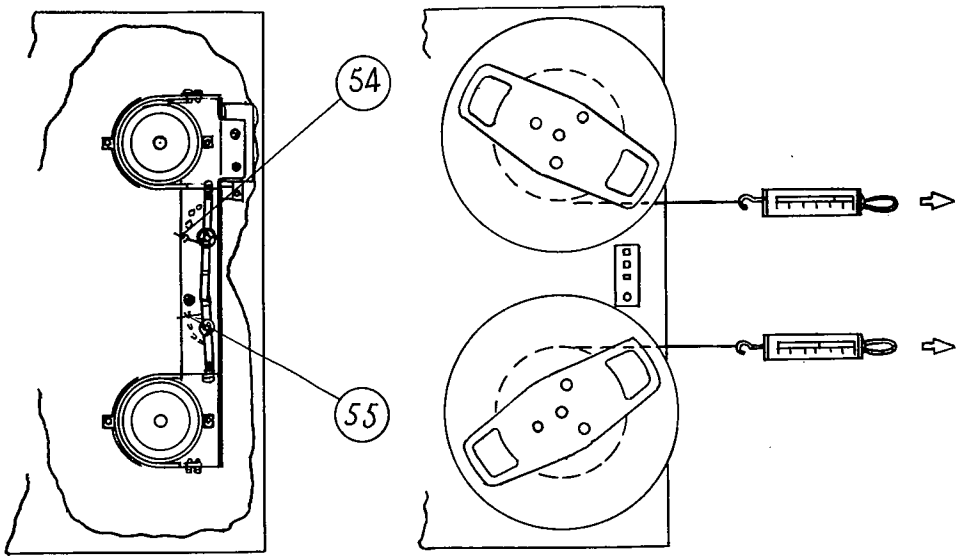

FIG. 7 BRAKE ADJUSTMENT

ALIGNMENT AND PERFORMANCE CHECKS

INSTRUMENTS AND TAPE REQUIRED

1. Ampex Stanbard Alignment Tape or equivalent
   7½ ips (Ampex 31321-01 or TEAC test tape No. 02801)
   3¾ ips (Ampex 31331-01)

   NOTE: TEAC 62801 test tape is also used for a test 3 ¾ips speed, except for signals below 250 Hz
2. AC Vacuum Tube Volt Meter capable of indicating rms voltages of .003V or less.
3. Standard AF Signal Generator with stable output from 50 Hz to 15,000 Hz
4. Earphones or Speaker System for monitoring
5. Reel of blank tape (Scotch 150, 190 or equivalent)
6. Channel Selecting Switch

HEAD HEIGHT ALIGNMENTS (Fig. 8)

1. Watch tape as it passes through head assembly, and observe the position of the tape at each of the heads.
2. Lay a piece of clear tape (or recording tape with oxide coating removed) across head assembly in the observed playing position. Adjust height of head as follows.

   Erase head: Top (front) edge of head laminations slightly (.0015″) above edge of tape

   Record head: Top (front) edge of head laminations flush with edge of tape

   Play (Forward) head: Top (front) edge of head laminations slightly (.0015″) within edge of tape

   Play (Reverse) head: Bottom (back) edge of head laminations slightly (.0015″) within edge of tape

   NOTE: Height adjustment of heads when completed should have all head surfaces, when viewed from side, aligned parallel with the tape guide surface.

PLAYBACK PERFORMANCE

1. Thread recorder with a standard alignment tape.

   CAUTION: The standard alignment tape used in following procedures may be partially erased if the record and playback heads are permanently magnetized. Demagnetize the heads before proceeding.

2. Set RECORD SELECTOR switch to SAFETY, MONITOR selector switch to TAPE, and TAPE SPEED selector switch to HIGH.
3. Connect a temporarily provided channel selecting switch, across the output jacks of Channels A and B, and the output of the switch to an AC VTVM.

4. Play 700 Hz (or 500 Hz) reference tone (10 db below normal operating level), adjust OUTPUT level control so that VTVM reads exactly −5 db (0.44V).

Playback Head Azimuth

5. Play 15 kc tone and turn azimuth adjustment serew (Fig. 8) of forward playback head until maximum meter reading is obtained.
6. Operate tape reverse switch to reverse the direction of tape.
7. Turn azimuth adjustment screw (Fig. 8) of reverse playback head until maximum meter reading is obtained.

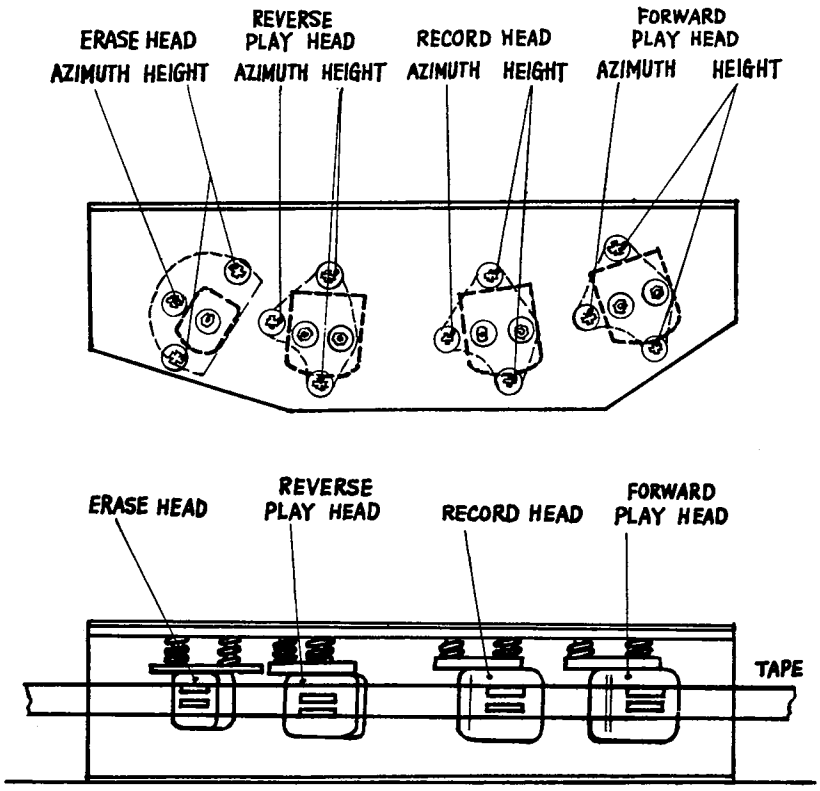

FIG. 8 HEAD ALIGNMENTS

Frequency Response

8. Play (forward) the alignment tape from 15 KHz to 50 Hz
9. Check the frequency response of both channels.
10. Operate tape reverse switch, and make the same adjustment as above, for both reverse channels.
11. Check the low speed frequency response for both channels and both directions, using 3 ¾ ips alignment tape.

Playback Level Setting

12. Play (7½ ips, forward) 700 Hz tone recorded at normal operating level by using the standard alignment tape.
13. Adjust the playback level control on the printed circuit board (VR9 for Channel A, VR11 for channel B, Fig. 9) to obtain 0 VU reading on the VU meter.

    NOTE: When the VU meter indicates 0 VU and with the OUTPUT level control at maximum position, the output level is approx. +4 db (1.2V).

Playback Noise Check

1. Play 700 Hz tone (normal operating level), and adjust OUTPUT level controls so that VTVM reads exactly 0 db (0. 775V).
2. Stop the tape and read noise level on the VTVM.

    NOTE: The signal to noise ratio measured from 3 % distortion level (peak recording level) is generally obtained by adding 6 db to the value measured above.

Playback Amplifier Check

If playback amplifier check is desired, connect a signal generator to playback input circuit as shown in Fig. 10, then check the frequency response, noise or amplifier gain etc.

NOTE: 1. Excessive input may cause overloading and distortion in the amplifier. Adjust the output level of the signal generator so that the VU meter indication is kept below 0 VU.

2. This is a high gain circuit. Make certain that the signal generator and input cabling are free from hum generation and pick-up, which may cause false readings.

Fig. 10 shows a typical frequency response curve and Fig. 11 shows a typical voltage chart.

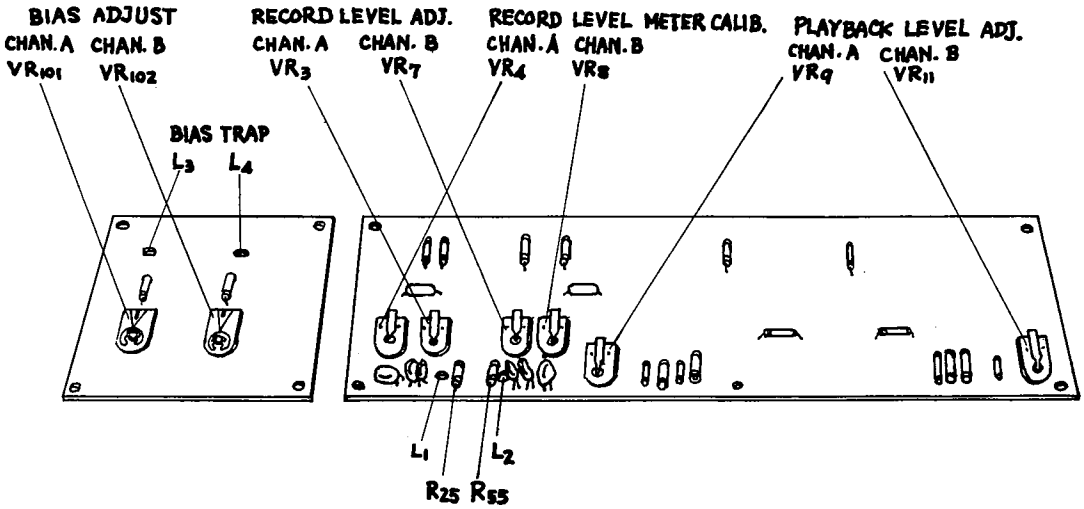

FIG. 9 RECORD AND PLAYBACK ADJUSTMENTS

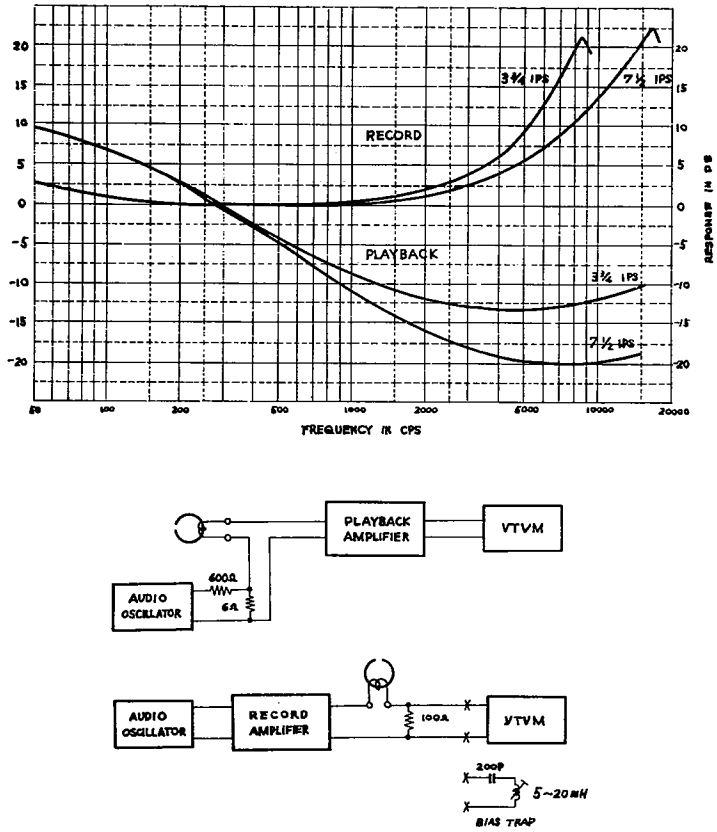

FIG. 10 AMPLIFIER MEASUREMENT

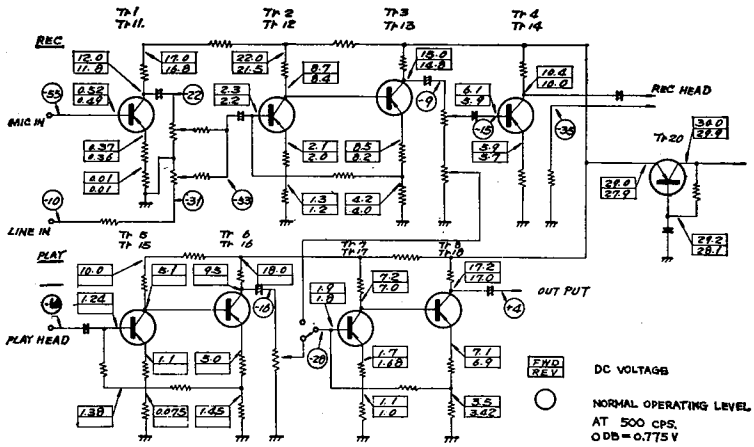

FIG. 11 A-1500/A-1600 AMPLIFIER LEVEL AND DC VOLTAGE CHART

RECORDING PERFORMANCE

Record Bias Adjustment

1. Connect a signal generator to Channel A LINE input. Set MONITOR selector switch to TAPE position, RECORD SELECTOR switch in STEREO position, TAPE SPEED selector switch to HIGH.
2. While recording a 500 Hz tone on the tape, adjust Channel A bias adjusting potentiometer (VR101, Fig. 9) for maximum output. Then turn the bias adjusting potentiometer counterclockwise until output meter reading decreases by 0.5 db from the maximum level.
3. Connect the signal generator to Channel B LINE input, and perform the same steps as above adjusting Channel B bias adjustment potentiometer (VR102, Fig. 9).

Record Level Calibration

NOTE: The playback level must be calibrated using standard tape prior to calibrating the record level (see Playback Level Setting).

1. Connect a tenporarily provided channel selecting switch, across the output jack of Channels A and B, and the output of the switch to an AC VTVM. Set MONITOR selector switch in TAPE position, RECORD SELECTOR switch to STEREO position, and TAPE SPEED selector switch to HIGH position.
2. Turn LINE INPUT level control of both channels to maximum.
3. Set the signal generator output level at −16 db (0.12 volt), 500 Hz
4. While recording a 500 Hz signal on the tape, adjust Record Level Calibration (VR3, VR7, Fig. 9) to obtain VU meter reading of exactly 0 VU.
5. Set MONITOR selector switch to SOURCE position.
6. Adjust Record Meter Level Calibration (VR4, VR8, Fig. 9) to obtain VU meter reading of exactly 0 VU.

Record Head Azimuth

1. Connect a signal generator to Channels A and B LINE INPUT. Connect a tenporarily provided channel selecting switch, across the output jacks of Channels A and B, and the output of the switch to an AC VTVM. Set MONITOR selector switch to TAPE position, RECORD SELECTOR switch to STEREO position, and TAPE SPEED selector switch to HIGH position.
2. While recording a 15 KHz signal on the tape, set LINE INPUT level control so meter reads 15 ~ 20 db below normal operating level (−15 ~ 20 VU on VU meter), and then adjust the recerd head azimuth screw (Fig. 8) for maximum output.
3. Check setting by repeating the above procedure using Channel B.

Overall Frequency Response

To avoid tape saturation, overall frequency response check at 7½ ips and 3¾ ips should be made at least 20 db below operating level.

1. Connect a signal generator to Channel A LINE input. Set MONITOR selector switch to TAPE position, RECORD SELECTOR switch to STEREO position, TAPE SPEED selector switch to HIGH.
2. While recording a 500 Hz signal on the tape, set LINE INPUT level control to obtain VU meter reading of 0 VU, and adjust OUTPUT level controls to obtain a VTVM reading of exactly 0 db (0. 775 V).
3. Reset LINE INPUT level control to obtain a VTVM reading of exactly –20 db (77. 5 mV).

   NOTE: If bias freqency signal leakage is indicated on the VTVM, a filter as shown in Fig. 10 can be used at the input of the VTVM.

4. Record signals from 50Hz to 15KHz at 7 ½ ips, or from 50Hz to 7. 5KHz at 3 ¾ ips on the tape, and read the reporoduced output on a VTVM. Check the frequency response of both channels.
   If adjustment is required, adjust L1 (Channel A) and L 2 (Channel B) for 7 ½ ips, replace C16 (Channel A) and C36 (Channel B) for 3 ¾ ips.

Record Noise Check

1. While recording a 500 Hz signal on the tape, adjust LINE INPUT level control to obtain a VTVM reading 6 db above normal operating level.
2. Set the LINE and MIC INPUT level controls to minimum.
3. Rewind the tape to the beginning portion of the 500 Hz recording.
4. Record the tape with LINE and MIC INPUT level controls at minimum position, over the portion where plus 6 VU recording was made, and make certain that erasure is being accomplished.
5. Erase the tape by recording with no signal input.
6. Rewind the tape to the beginning of the recording.
7. Read the VTVM indication for noise level while playing back the portion which had been previously recorded.

Record Amplifier Check

If a Check of the record amplifier is required. Connect a signal generator to record input circuit as shown in Fig. 10, then check the frequency response, noise or amplifier gain etc.

NOTE: To avoid overloading the amplifier, frequency response check should be made at least 20 db below normal operating level.

Figure 10 shows a typical record amplifier response curve, and Figure 11 shows a typical record amplifier voltage check chart.
If a check of the recording monitor circuit (record input to line output) is required, connect a signal generator to record input circuit, and an VTVM across output jacks. Set MONITOR selector switch to SOURCE position. Then check the frequency response, noise etc.

MAINTENANCE

CLEANING THE HEADS

To prevent the loss of high frequency response or insufficient erasure, the heads should be cleaned frequently. Under average operating conditions, cleaning the heads after each eight to ten hours of use will insure against the loss of high frequency response. To clean the head, moisten a clean, lintless cloth with carbon tetrachloride or alcohol. Carefully wipe the face of each head and the tape guides to remove all traces of dirt and magnetic oxide deposits.

DEMAGNETIZATION

The tape heads should be demagnetized occasionally with a head demagnetizer to maintain the best possible performance of the equipment and to prevent the possibility of gradual deterioration of your recorded tapes.

CAUTION: Do not allow the demagnetizer to come in close proximity with the level indicator meter, as permanent damage to the meter may result.

Demagnetizing:

To demagnetize the heads, use a two-pole type of demagnetizer, with a piece of ordinary splicing tape over the tips. With the power completely removed from the recorder, gently place the protected tips against the upper pole pieces of the first head. Then slowly move the tips downward toward the lower pole pieces of the head. Alternate between the two sets of pole pieces while slowly with drawing the demagnetizer. Repeat this process for each of the heads. Do not remove the power from the demagnetizer until it is at least 2 feet away from the recorder.

LUBRICATION

Most of the rotating parts of the transport have been permanently lubricated at the factory. Further lubrication should be limited to applying SAE-10, non-detergent oil to the following points if there should be evidence of binding or dragging.

Capstan assembly top bearing ····· 2 drops
Pinch roller bearing ····· 1 drop
Capstan motor and reel motor····· 1 cc (after every 1000 hours of use)

Remove excess oil from pinch roller and capstan with isopropyl alcohol.

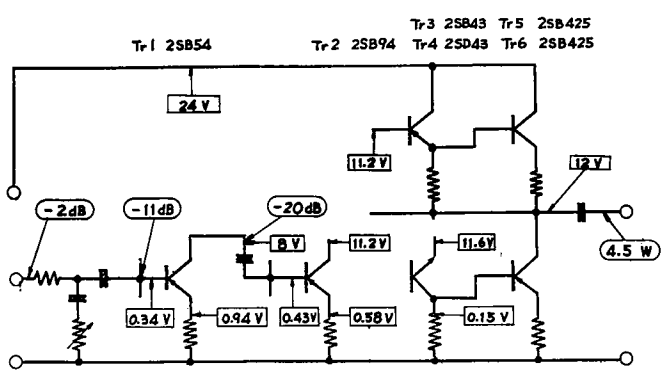

FIG. 12
A-1600 SPEAKER AMPLIFIER LEVEL AND DC VOLTAGE CHART

TROUBLE SHOOTING

Capstan fails to turn when unit is switched on.

1. Line fuse (F1) blown
2. Drive belt (8) off or broken
3. Capstan shaft or bearing defective
4. Capstan motor defective
5. Bad contacts on reverse relay (K1)
6. Tape speed selector switch (608) defective
7. Capacitor C220, C221, C222, C233, or C227 defective
8. Shut-off switch (66) defective

Transport selector pushbuttons fail to lock.

1. Transport selector switch (401) mechanism defective

Pinch roller fails to contact capstan.

1. DC fuse (F2) open
2. Jumper plug not in remote control socket
3. Capstan solenoid (35) defective
4. Transport selector switch (401) defective

DC fuse open.

1. Silicon diode (D205) defective
2. Capacitor C204, C205, C224, C225, C226 defective
3. Solenoid coil shorted
4. Relay coil shorted

Pinch roller fails to contact capstan when PLAY pushbuttonis depressed.

1. Capstan solenoid defective
2. Jumper plug not in remote control socket
3. Bad contacts on transport selector switch (401)
4. Poor adjustment of pinch roller

Takeup reel fails to rotate when Fast Forward or PLAY pushbutton is depressed.

1. Resistor R205 open
2. Brake drum (82) loose on motor shaft
3. Bad contact on switch (401)
4. Right motor defective
5. Right hand brake defective
6. Capacitor C217, C219 defective

No reverse play

1. Reverse switch (79) defective
2. Bad contacts or defective relay (622)
3. Resistor R206 open

No rewind

1. Brake drum (82) loose on motor shaft
2. Bad contact on switch (401)
3. Left motor defective
4. Brake defective
5. Capacitor C216, C218 defective

Footage counter doesn't function.

1. Belt for counter (88) broken or misaligned
2. Pulley loose on counter shaft
3. Insufficient pressure when resetting

Tape spillage when transport is stopped.

1. Oil on brake drums (82) or brakes
2. Brake springs weak or broken

No sound in playback

1. Lifter (16, 17) defective
2. Bad contacts relay (529)
3. playback head defective
4. Amplifier defective
5. Tape twisted (oxide out)

No erasing

1. Foreign matter on erase head (clean head)
2. Bias oscillator circuit defective
3. Erase head defective

No recording

1. Record head defective
2. Amplifier defective
3. Bad contacts on record selector switch (502)
4. Bad contacts on transport selector switch (401)
5. Bias oscillator circuit defective

Weak or distorted sound

1. Foreign matter on heads
2. Heads magnetized
3. Poor bias adjustment
4. Amplifier defective

Shut-off fails to function.

1. Shut-off switch (66) defective
2. Transport selector (401) defective
3. Shut-off solenoid (451) defective

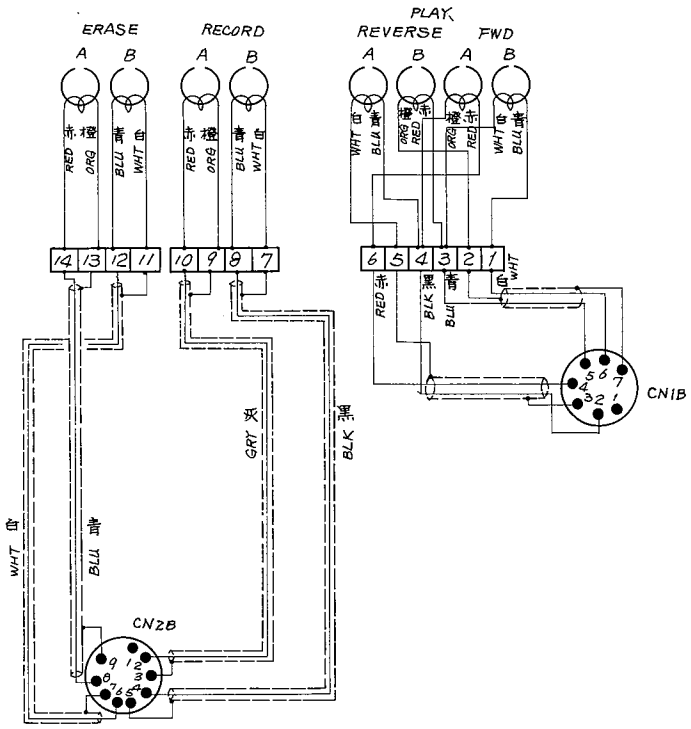

FIG. 33 HEAD ASSEMBLY SCHEMATIC

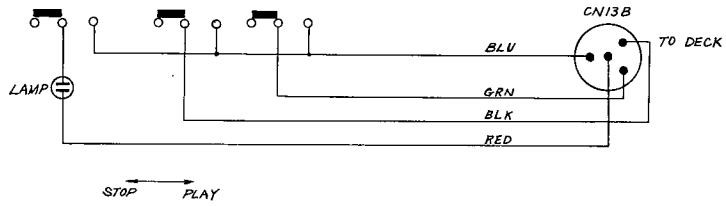

FIG. 34 REMOTE CONTROL UNIT SCHEMATIC

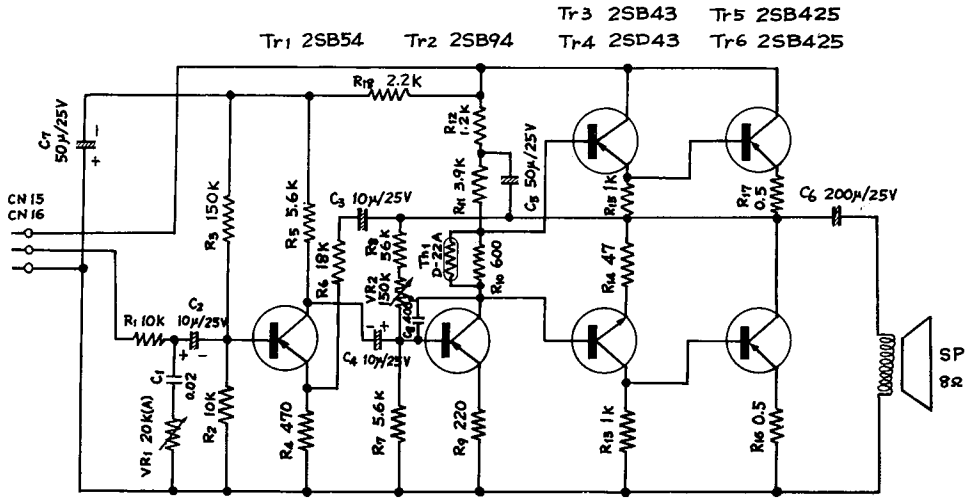

FIG. 35 A-1600 SPEAKER AMPLIFIER SCHEMATIC

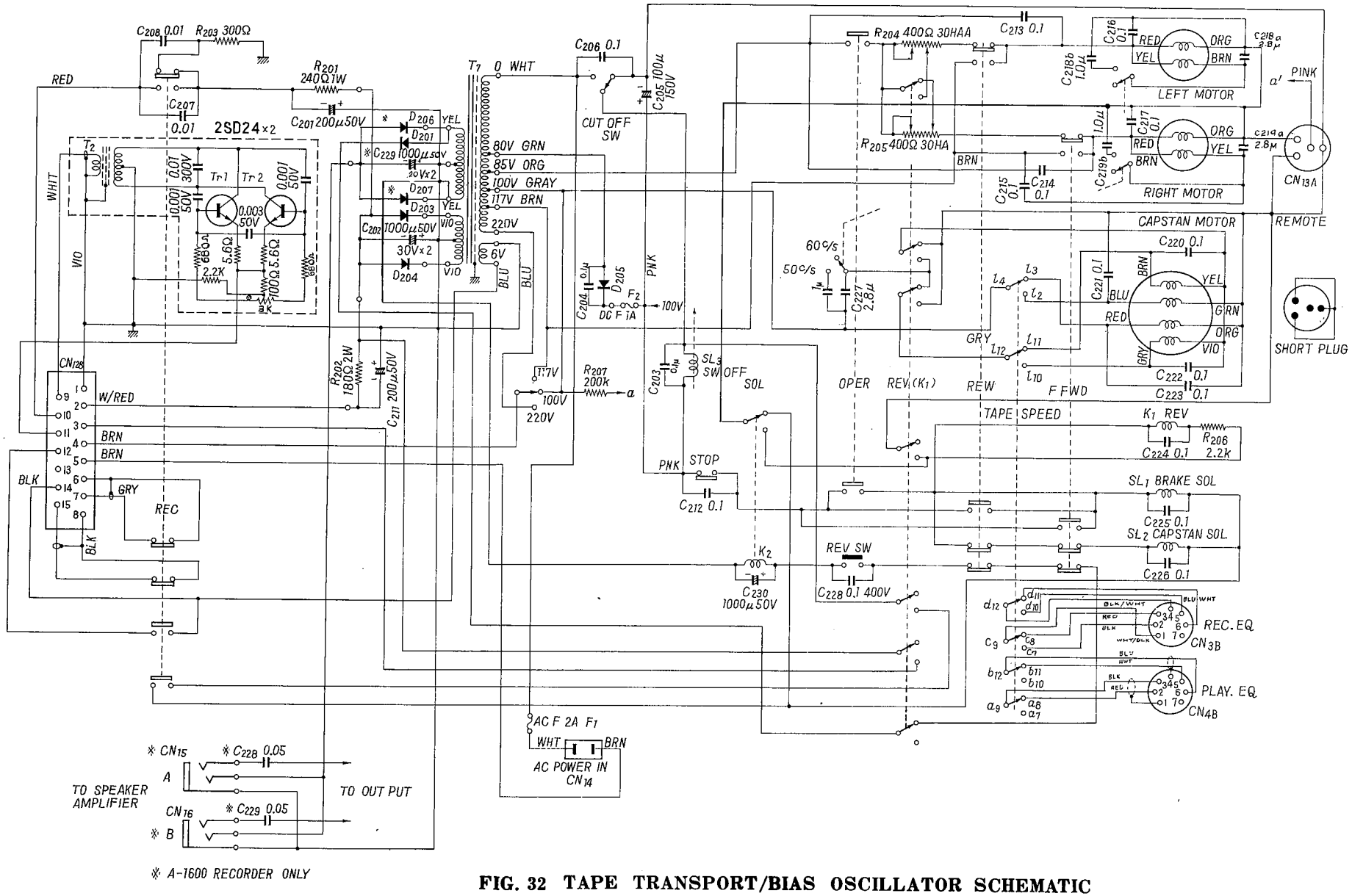

FIG. 32 TAPE TRANSPORT/BIAS OSCILLATOR SCHEMATIC

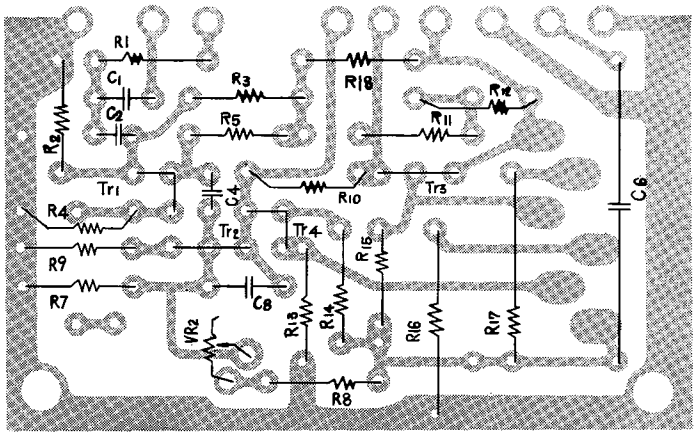

FIG. 28 SPEAKER AMPLIFIER CIRCUIT BOARD— I —

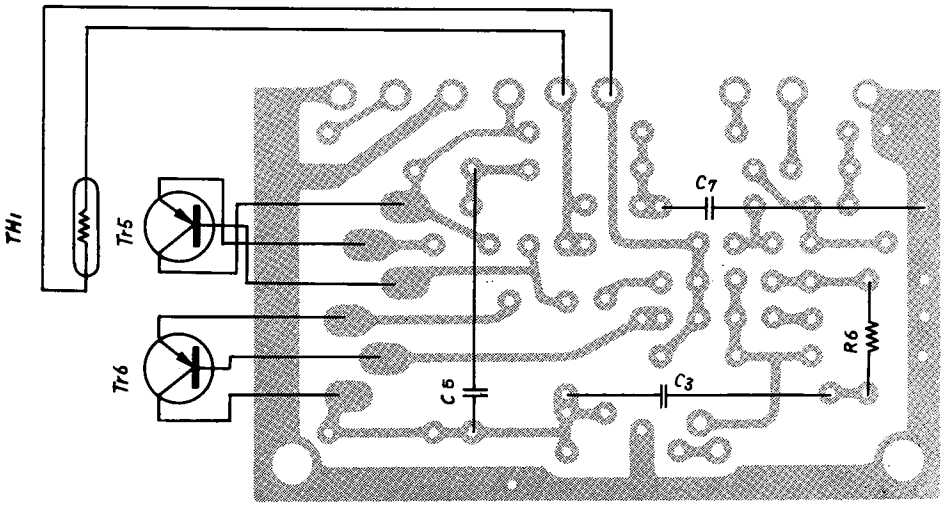

FIG. 29 SPEAKER AMPLIFIER CIRCUIT BOARD— II —

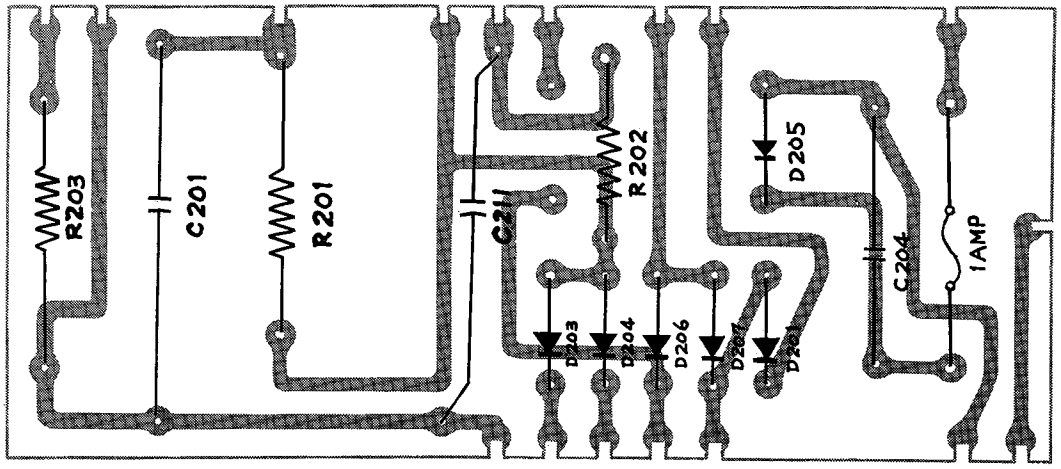

FIG. 26 POWER SUPPLY PRINTED CIRCUIT BOARD

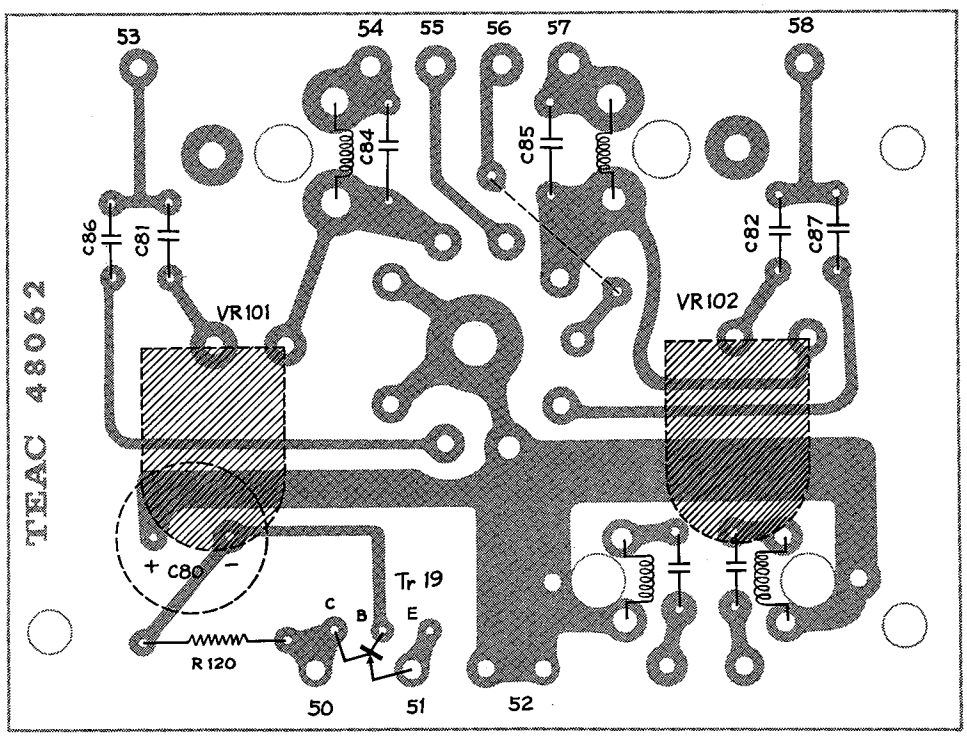

FIG. 27 RECORD OUTPUT PRINTED CIRCUIT BOARD

REMOTE CONTROL

REF. NO.	PART NO.	DESCRIPTION
250	25022	Remote Control Ass'y
251	19026	Remote Control Box
252	44301	Push-button Switch
253	25107	Push-button
254	41706	Pilot Indicator (Red)
255	41414	Pilot Lamp
256	27015	Cord Clamper
257	19027	Side Dress Panel
258	27049	Rubber Grommet
259	47081	Remote Cable with
260	43226	Connector Plug (4-pin)

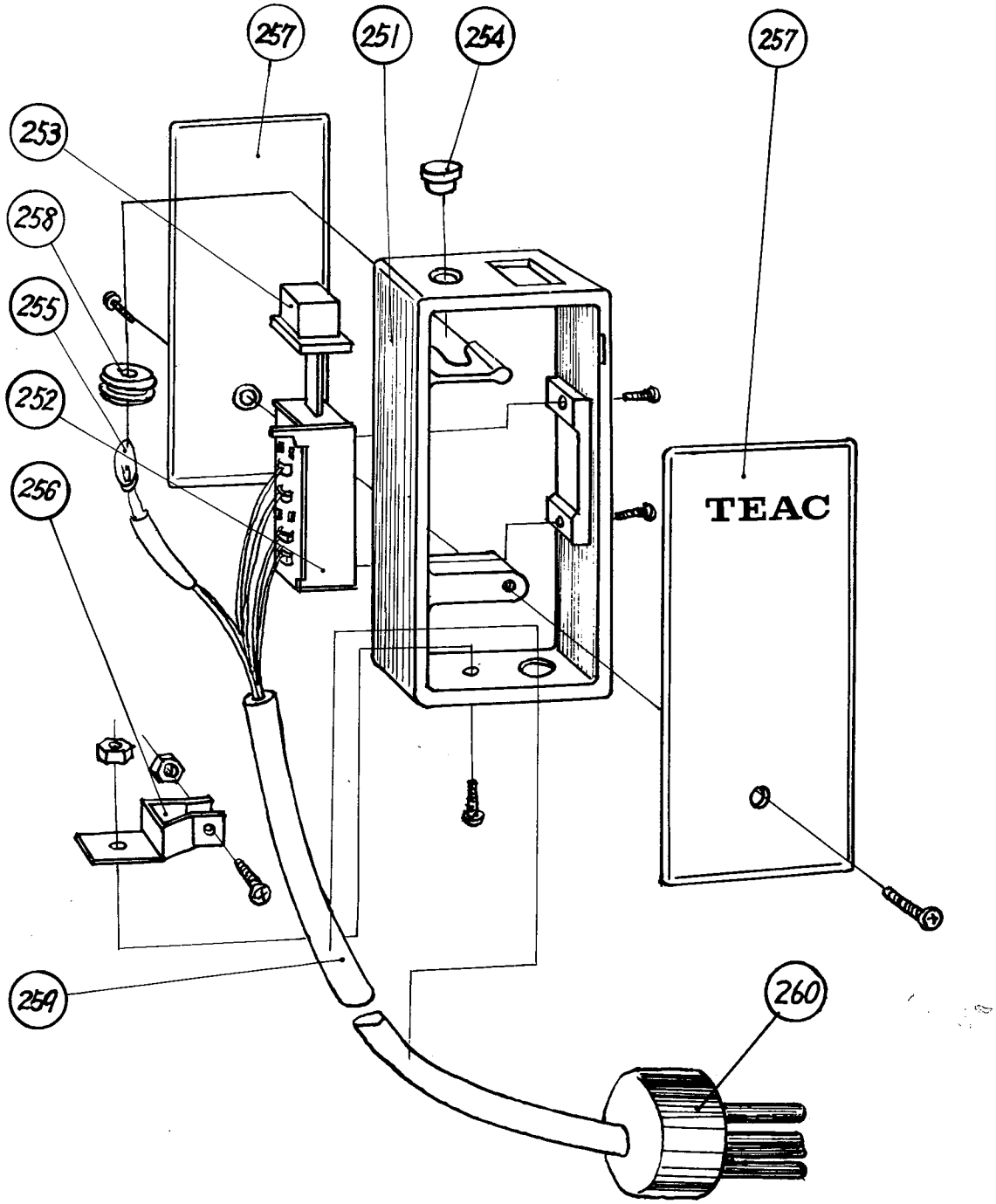

FIG. 23 REMOTE CONTROL, EXPLODED VIEW

CARRYING CASE

REF. NO.	PART NO.	DESCRIPTION
900	28396	Carrying Case Body Ass'y
904	28416	Handle
905	28418	Catch B
906	28417	Handle Retainer
913	28421	Handle Retaining Plate
914	28420	Rubber Foot
921	28419	Carrying Case Body
927	28386	Nut
	28059	Carrying Case Ass'y (A-1600)
	28058	Carrying Case Ass'y (A-1500)
	28397	(A-1500)

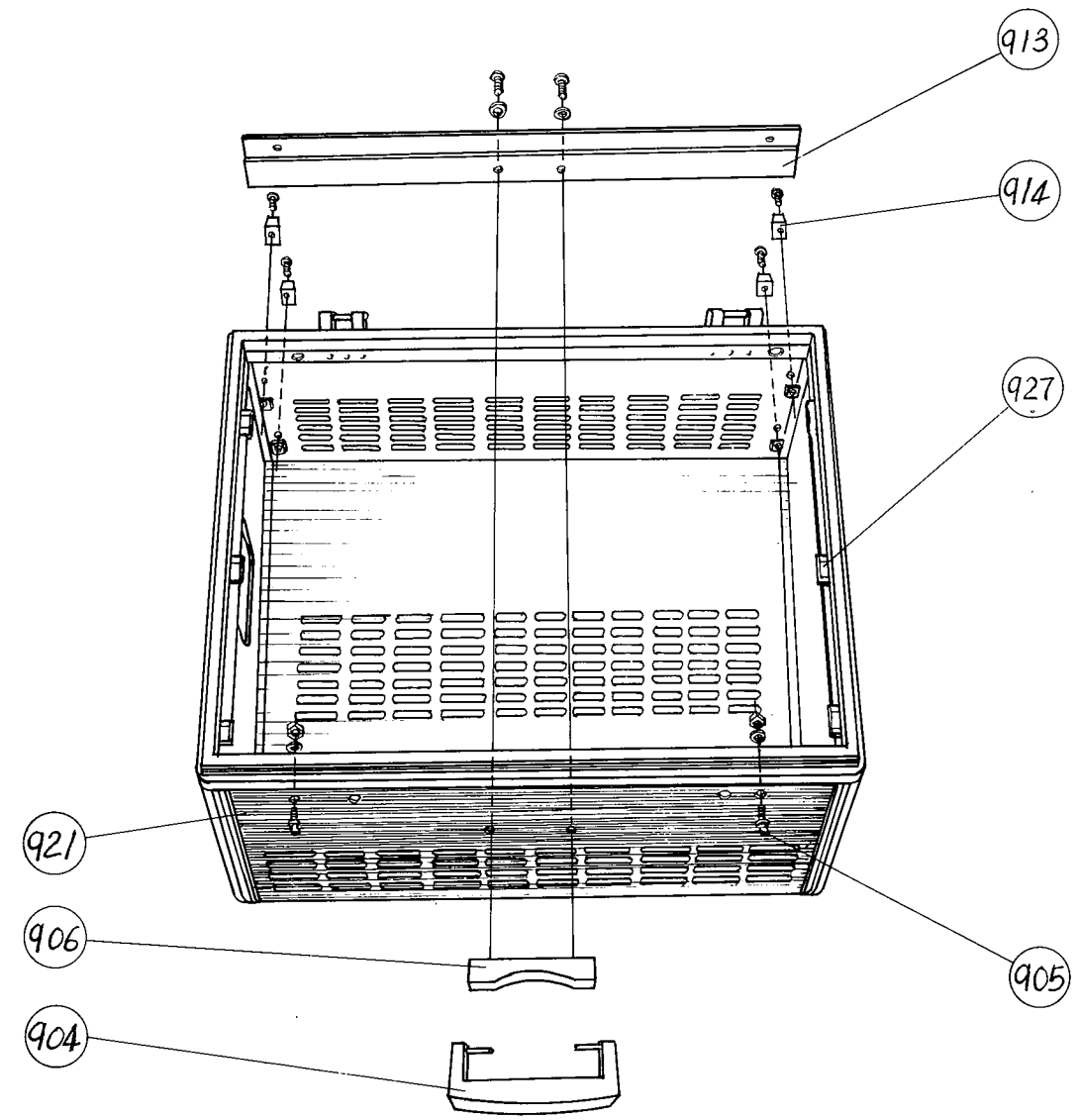

FIG. 22 CARRYING CASE, EXPLODED VIEW

SPEAKER AMPLIFIER

REF. NO.	PART NO.	DESCRIPTION
850L	28060	Left Speaker Case Ass'y
850R	28061	Right Speaker Case Ass'y
851L	28422	Left Speaker Case
851R	28423	Right Speaker Case
852	28433	Left Speaker Case Lid
853	28429	Speaker Case
854	28432	Cord Clamper
855	28431	Catch
857	28434	Case Foot
858	28430	Emblem
861	27107	Dial Plate
862	63008	Speaker
863	48020	Printed Circuit Board
864	23042	Heat Sink
865	24005	Spacer
866	27016	Rubber Cushion
867	23043	Thermistor Holder
868	53206	Terminal Strip 1L-2P
869	28311	Dumper
871	53310	Potentiometer 20kΩ
872	53305	Potentiometer 150kΩ (D.C. Balancer)
873	42310	Transistor 2SB54
	42305	Transistor 2SB94
	42308	Transistor 2SB43
	42309	Transistor 2SD43
	42319	Transistor 2BS425
	42501	Thermistor D-22A
874	25125	Knob
875	47073	Speaker Amp. Input Cable
880	40030	Speaker Amp. Ass'y
	28062	Right Complets Speaker Case (With speaker and its amplifier)
	28063	Left Complets Speaker Case (With speaker and its amplifier)
881	43204	Plug (3P)

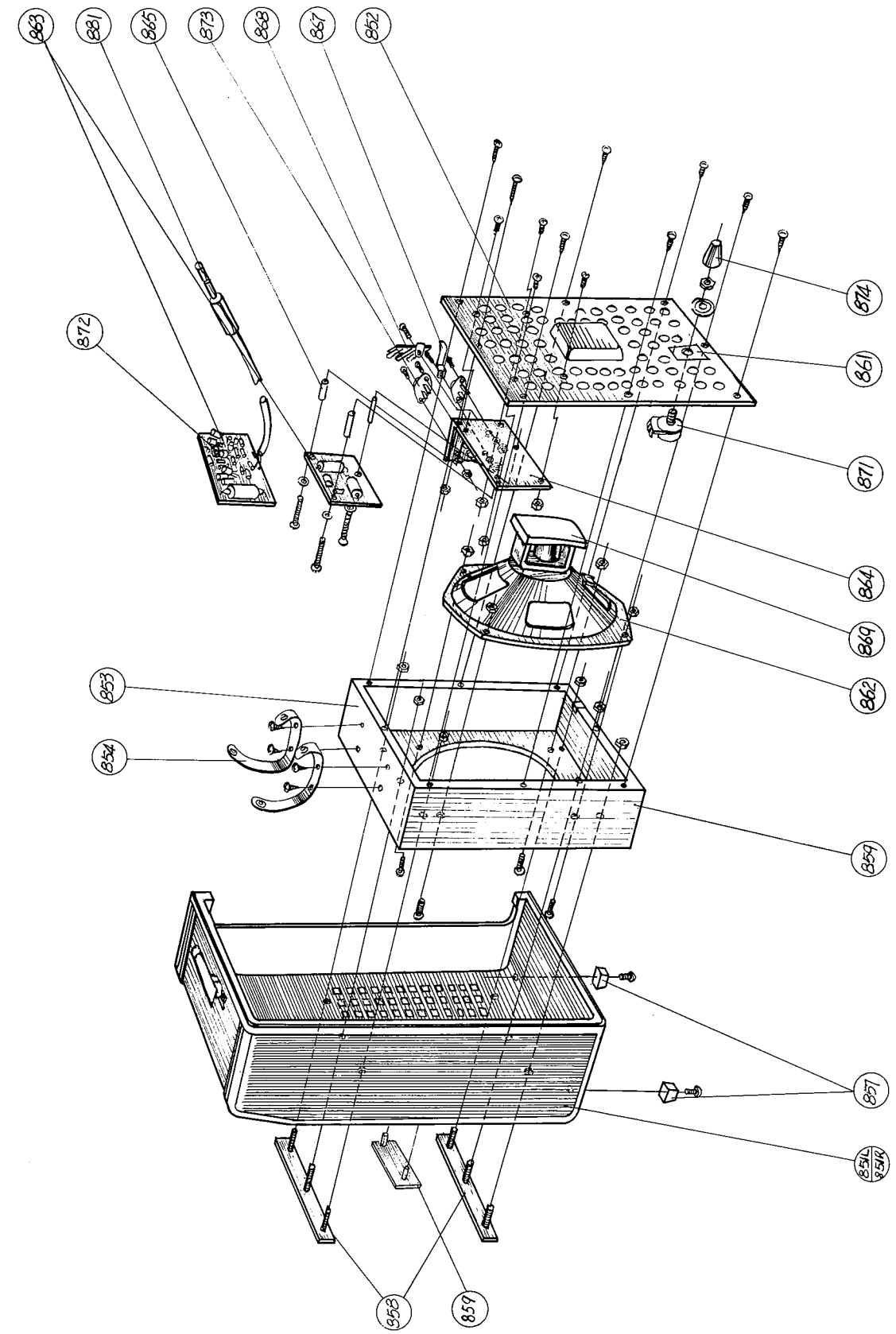

FIG. 21 SPEAKER AMPLIFIER, EXPLODED VIEW

REF. NO.	PART NO.	DESCRIPTION
500	40028	Pre-Amplifier Ass'y (A-1500)
	40029	(A-1600)
501	42905	Heat Sink
502	T44302	Record Selector Switch
503	23074	Connector (15-Pin) Mounting Frame
504	44106	Power Switch
505	43601	Connector 15-Pin
506	48116	Volume Indicator Meter
507	53706	Double Potentiometer 10kΩ
508	43427	Mic Jack
509	23056	Fiber Washer
510	27146	Plastic Washer
511	23069	Jack Nut
512	43439	Pin Jack
513	23098	Side Panel (Right)
514	48030	Printed Circuit Board
515	25201	Knob (Inner)
516	25131	Knob (Outer)
521	43418	Phone Jack
522	58301	Meter Bezel
523	41404	Pilot Lamp
524	41501	Lamp Holder
525	44407	Monitor Selector Switch
526	41701	Lamp Cap
528	43420	Socket 7-Pin
529	61024	Head Selector Relay
530	56607	Choke Coil 8-2.2mH
531	27016	Rubber Cushion
532	56603	Choke Coil 10mH
533	43421	Socket 9-Pin
534	48062	Printed Circuit Board
535	23028	Amp. Dress Panel
536	23070	Pre-Amplifier Chassis
402	25108	Transport Selector Button (Black)
613	45206	Terminal Strip 1L-2P
	42302	Transistor 2SB257
	42311	Transistor 2SA49
	42304	Transistor 2SB189
	42305	Transistor 2SB94
	42321	Transistor 2SB415
	42322	Transistor 2SB440
	42324	Transistor 2SB486
537	43801	Connector Socket 15-Pin
538	11122	Side Dress Panel (A-1600)
	11121	Side Dress Panel (A-1500)
539	43001	DIN Connector
540	56609	Choke Coil 3mH
632	41207	Fuse Post

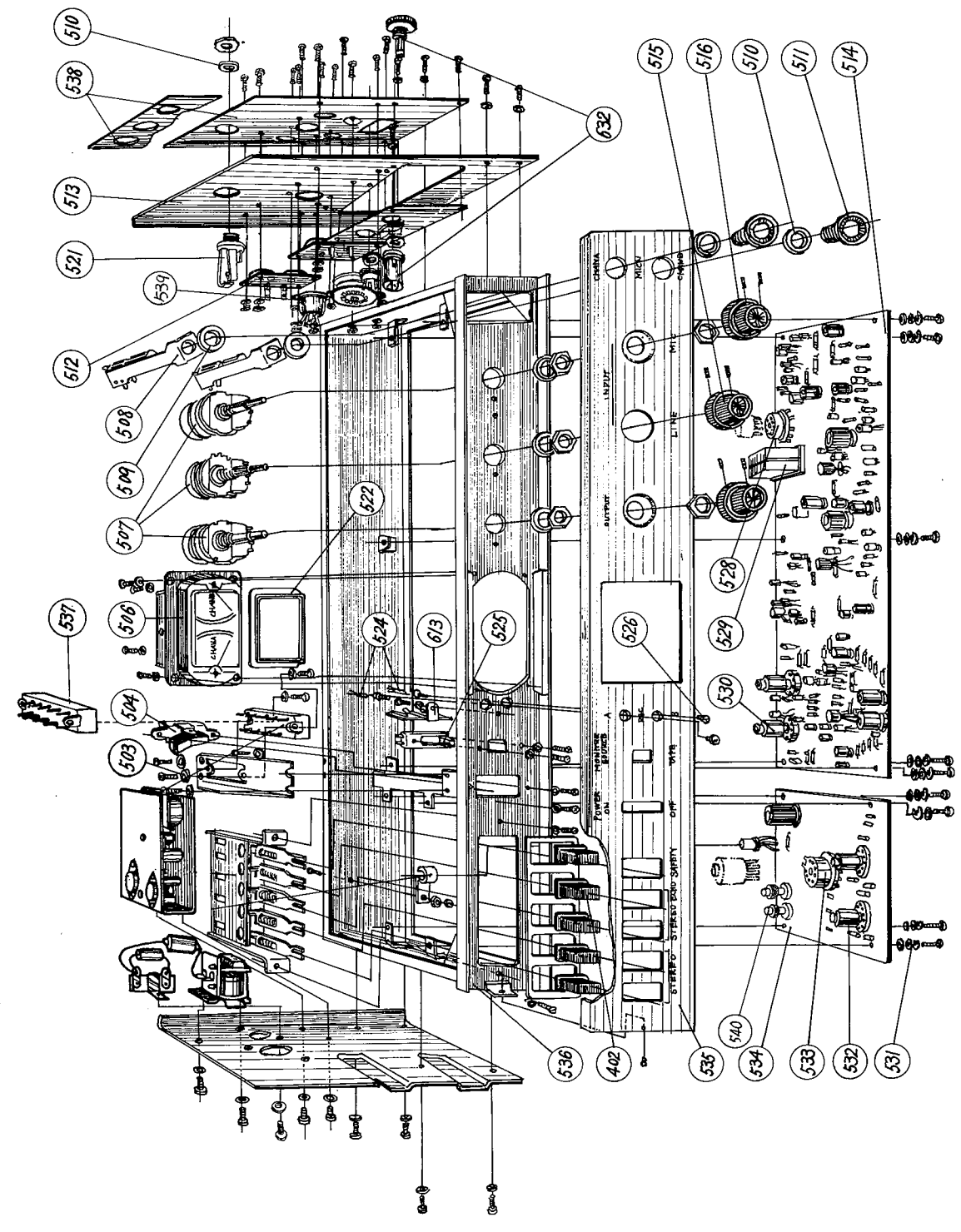

FIG. 20 AMPLIFIER, EXPLODED VIEW

BRAKE ASS'Y

REF. NO.	PART NO.	DESCRIPTION
35	17001	Brake Band Ass'y
36	17191	Brake Band
37	17138	Brake Felt
50	17002	Brake Mounting Base Ass'y
51	17179	Brake Mounting Base
52	17168	Brake Lever A
53	17169	Brake Lever B
54	17190	Left Brake Spring
55	17189	Right Brake Spring
56	17180	Brake Band Retainer
58	61617	Solenoid Ass'y
59	12155	Pin A
603		Flat Washer M3
751	21840	Pin M1

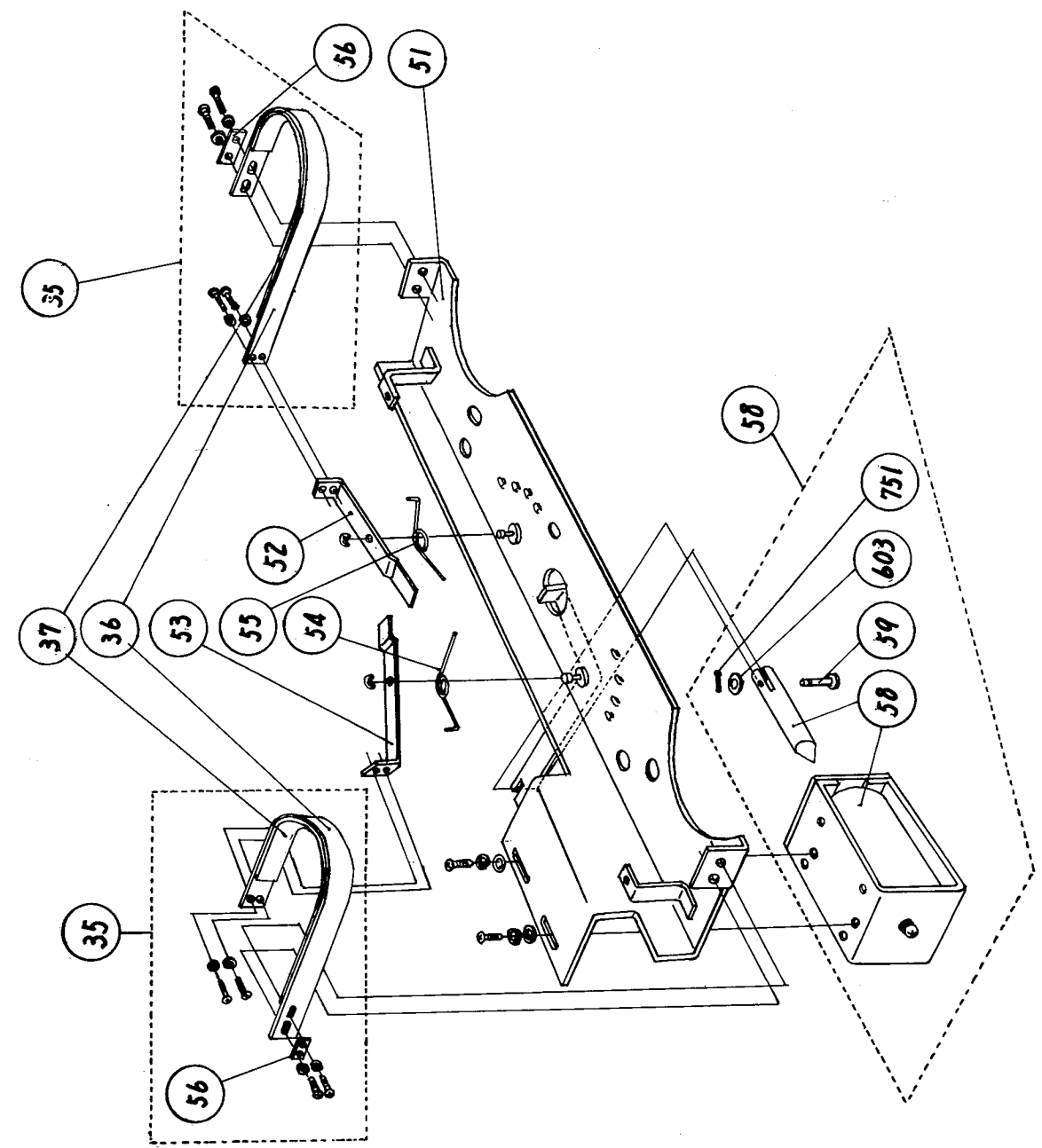

FIG. 19 BRAKE ASS'Y, EXPLODED VIEW

TRANSPORT SELECTOR SWITCH/SHUT-OFF SOLENOID

REF. NO.	PART NO.	DESCRIPTION
400	25015	Transport Selector Switch Ass'y
401	44315	Transport Selector Switch
402	25108	Transport Button (Black)
403	25109	Transport Button (Red)
634	54806	Capacitor 0.1μF/250V Film
450	25016	Shut-off Solenoid Ass'y
451	61606	Shut-off Solenoid
452	45210	Terminal Strip 1L-1P (Right)
604	54102	Capacitor 0.1μF Paper
635	54106	Capacitor 0.01μF/400V Oil-Filled

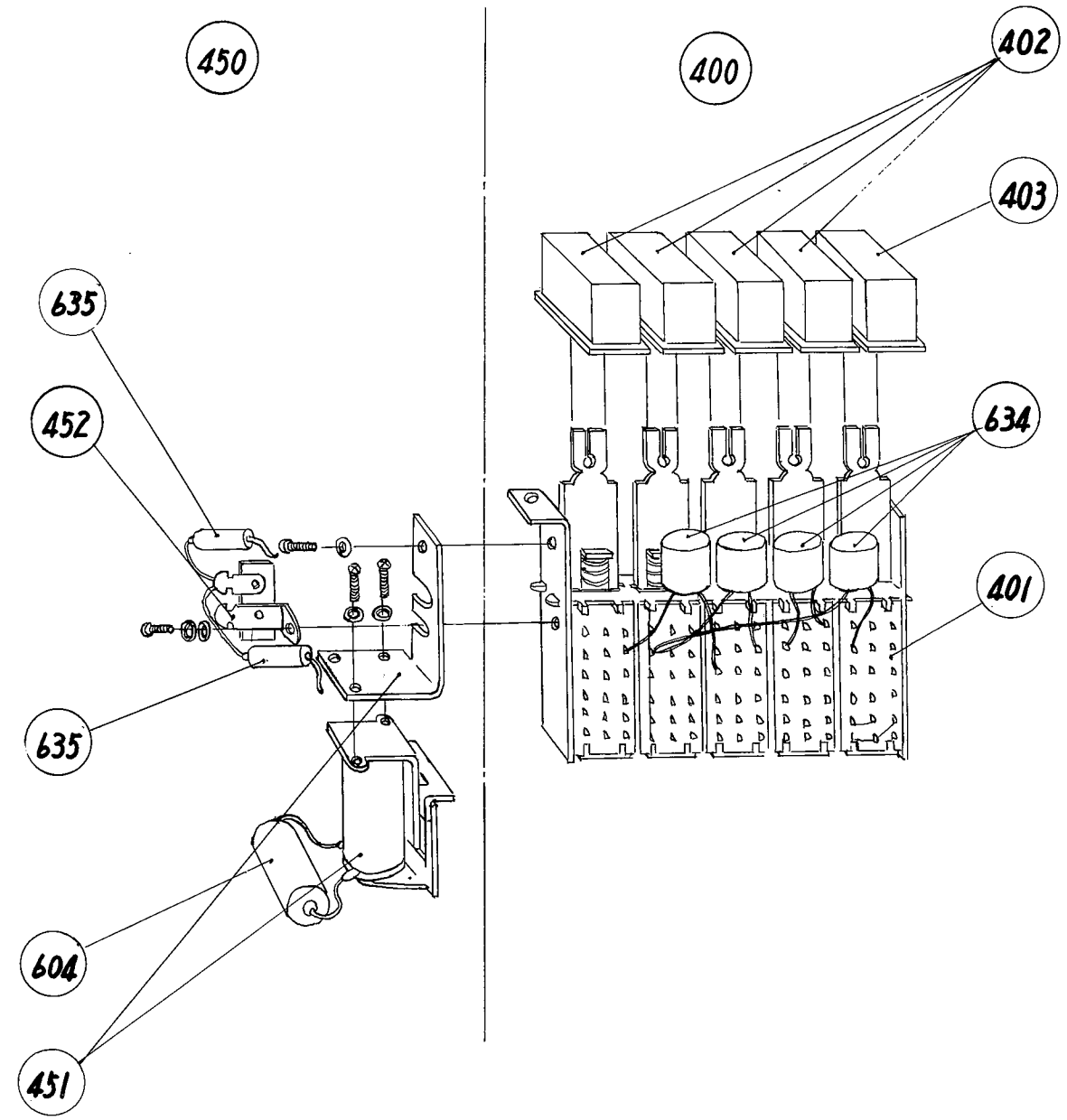

FIG. 18 TRANSPORT SELECTOR SWITCH, SHUT-OFF SOLENOID, EXPLODED VIEW

HEAD ASS'Y

REF. NO.	PART NO.	DESCRIPTION
100	13014	Head Ass'y
101	66601	Record Head
102	66903	Playback Head
103	66303	Erase Head
104	13362	Head Base Plate
105	13363	Bottom Shield Plate
106	13359	Head Mounting Plate R
107	13360	Head Mounting Plate E
108	13358	Head Mounting Plate P
109	22020	Spring
110	22045	Spring
111	22042	Spring
112	13334	Tape Guide A
118	48031	Printed Terminal Strip 15P
114	24039	Leg
117	13329	Housing Leg

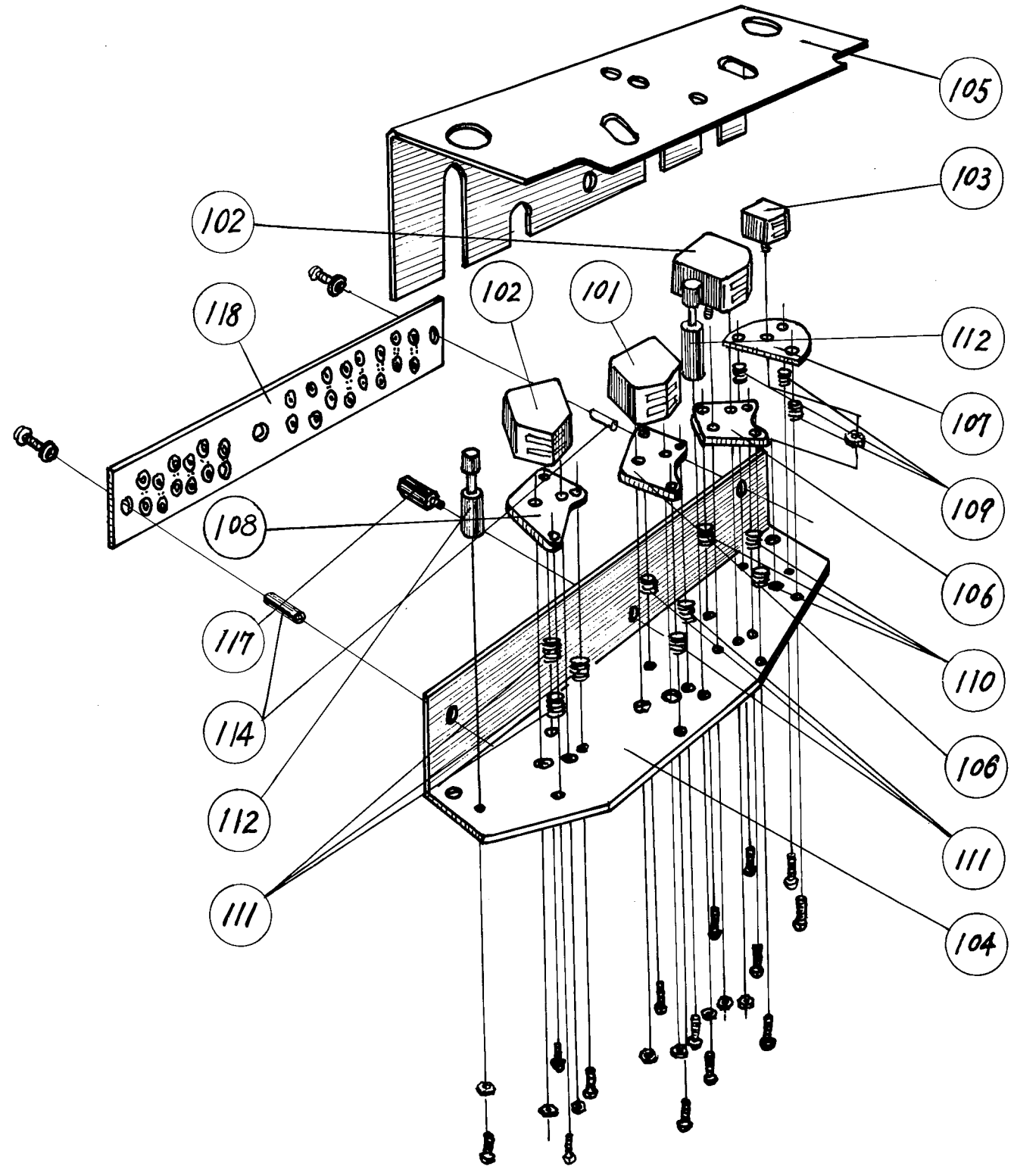

FIG. 17 HEAD ASS'Y, EXPLODED VIEW

CAPSTAN ASS'Y

REF. NO.	PART NO.	DESCRIPTION
1	12267	Capstan Shaft Ass'y
2	12263	Capstan Shaft
3	12264	Capstan Housing
4	12262	Metal Bearing
5	27273	Bearing Washer
6	12166	Fly Wheel
13	13333	Housing Leg
14	13335	Tape Guide B
15	15007	Tape Lifter Ass'y
16	15160	Lifter Ass'y A
17	15161	Lifter Ass'y B
18	15142	Lifter Retaining Plate Ass'y
703		E-clip M3
12	12231	Capstan Base
75	44956	Sensing Post Ass'y

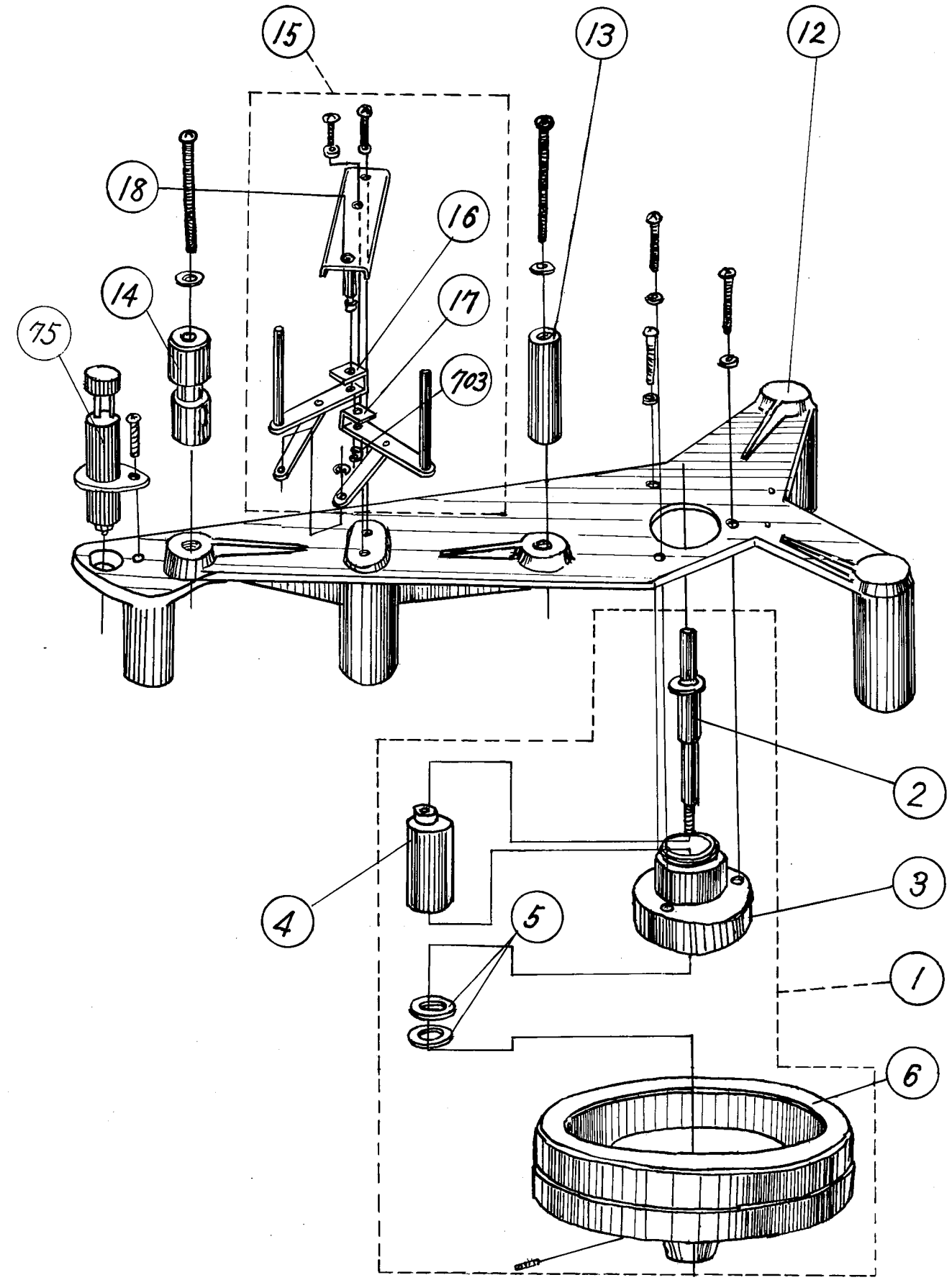

FIG. 16 CAPSTAN ASS'Y, EXPLODED VIEW

LIFTER/PINCH ROLLER ASS'Y

REF. NO.	PART NO.	DESCRIPTION
26	14142	Roller Arm
27	15012	Pinch Roller Link Arm Ass'y
28	14150	Double Nut A 4 mm
29	14151	Double Nut B 4 mm
30	22004	Pressure-Spring
31	12153	Pressure Adjust Screw
32	14135	Stopper
33	22044	Spring
705		E-clip M5
710		Fiber Washer M7
800	27152	Felt Washer
58	61621	Solenoid Ass'y
59	12155	Pin A
603		Flat Washer M3
751	21840	Pin M1
15	15007	Tape Lifter Ass'y
16	15160	Lifter Ass'y A
17	15161	Lifter Ass'y B
18	15142	Lifter Retaining Plate Ass'y
702		E-clip M2
703		E-clip M3
704		E-clip M4
19	15190	Lifter Lever Ass'y
20	15193	Lifter Arm
12	12260	Capstan Base

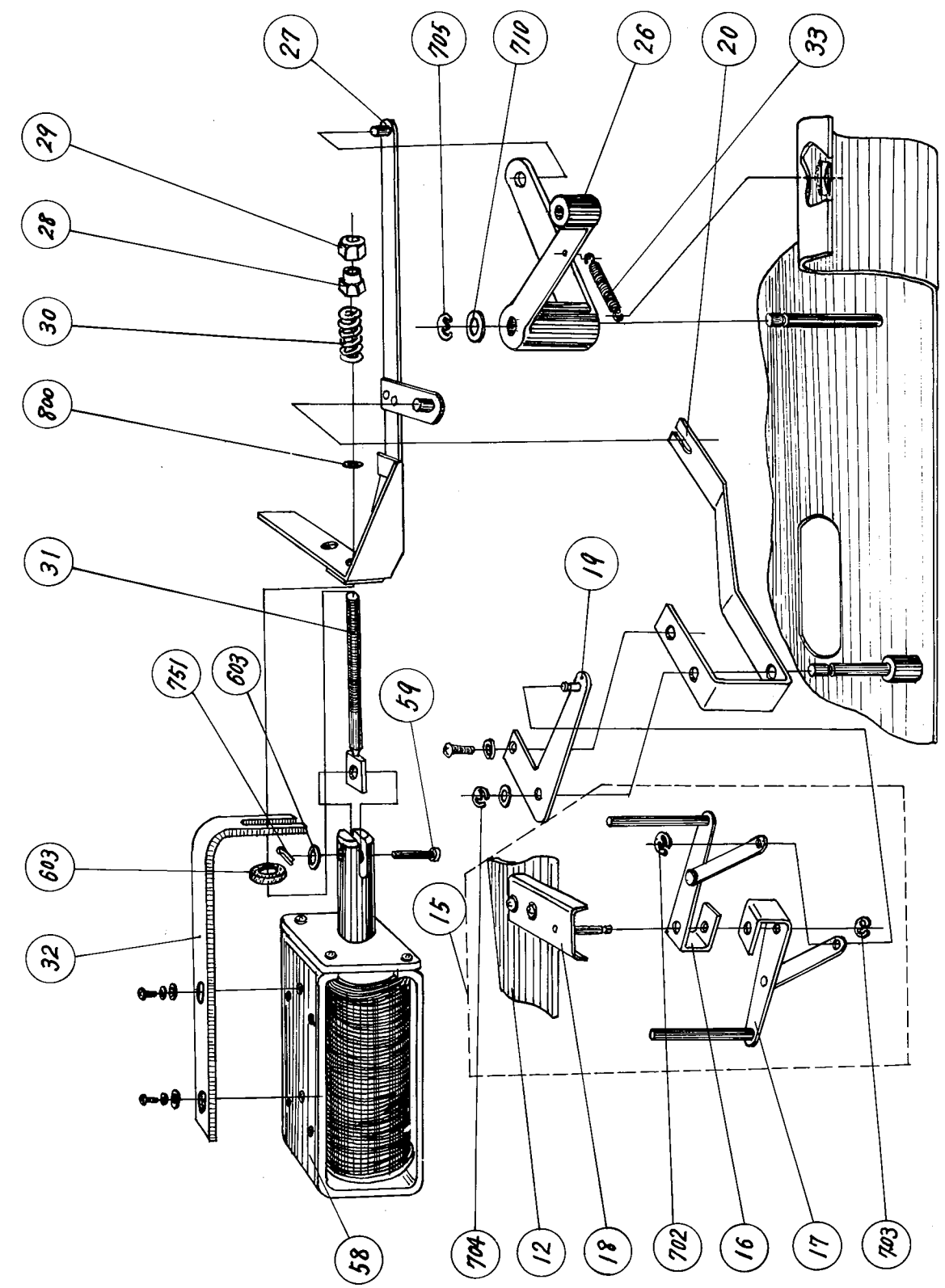

FIG. 15 LIFTER/PINCH ROLLER ASS'Y, EXPLODED VIEW

TAPE TRANSPORT-BOTTOM

REF. NO.	PART NO.	DESCRIPTION
9	70111	Capstan Motor
10	12250	Fan
84	70214	Reel Motor
91	11152-1	Transport Chassis
97	27048	Rubber Grommet
203	27198	Resistor Retaining Plate
204	52416	Tension Adjust Resistor
601	40032	Oscillator Ass'y
604	54102	Capacitor 0.1 μF
605	61036	Delay Relay
606	48065	Power Supply Printed Circuit Board
607		Resistor 1kΩ 2W Wire Wound
608	44325	Speed Selector Switch
609	43209	Plug 7-Pin (Brown)
610	43210	Plug 7-Pin (Black)
611	27282	Thrust Plate Retainer
612	43415	Tube Socket 7-Pin (Black)
613	45206	Terminal Strip 1L-2P
614	23024	Switch Cover
615	55111	Capacitor 1000 μF/50V Electrolytic
616	42406	Tube 12AU7
617	27264	Thrust Plate, Nylon
618	27285	Thrust Plate, Steel
619	56309	Power Transformer
620	45202	Terminal Strip 1L-3P (Left)
621	55112	Capacitor 100 μF/150V Electrolytic
622	61037	Relay (4T2M1B)
623	54533	Capacitor 2.8 + 1μF/250VAC
624	54539	Capacitor 2.8 + 1μF x 2/250VAC
626	23022	PCB Leg
627	43426	Socket 4-Pin
628	41114	Fuse 2 Amp.
629	43226	Short Plug 4-Pin (Black)
630	23188	Side Panel (Left)
631	43105	AC Receptacle
632	41207	Fuse Post
633	27145	Cord Clamper
636	55504	Capacitor 200μF/50V Electrolytic
637	41104	Fuse 1 Amp.
638	43023	PCB Leg
	47077	Power Cord
642	23099	Side Plate
643	44212	Voltage Selector

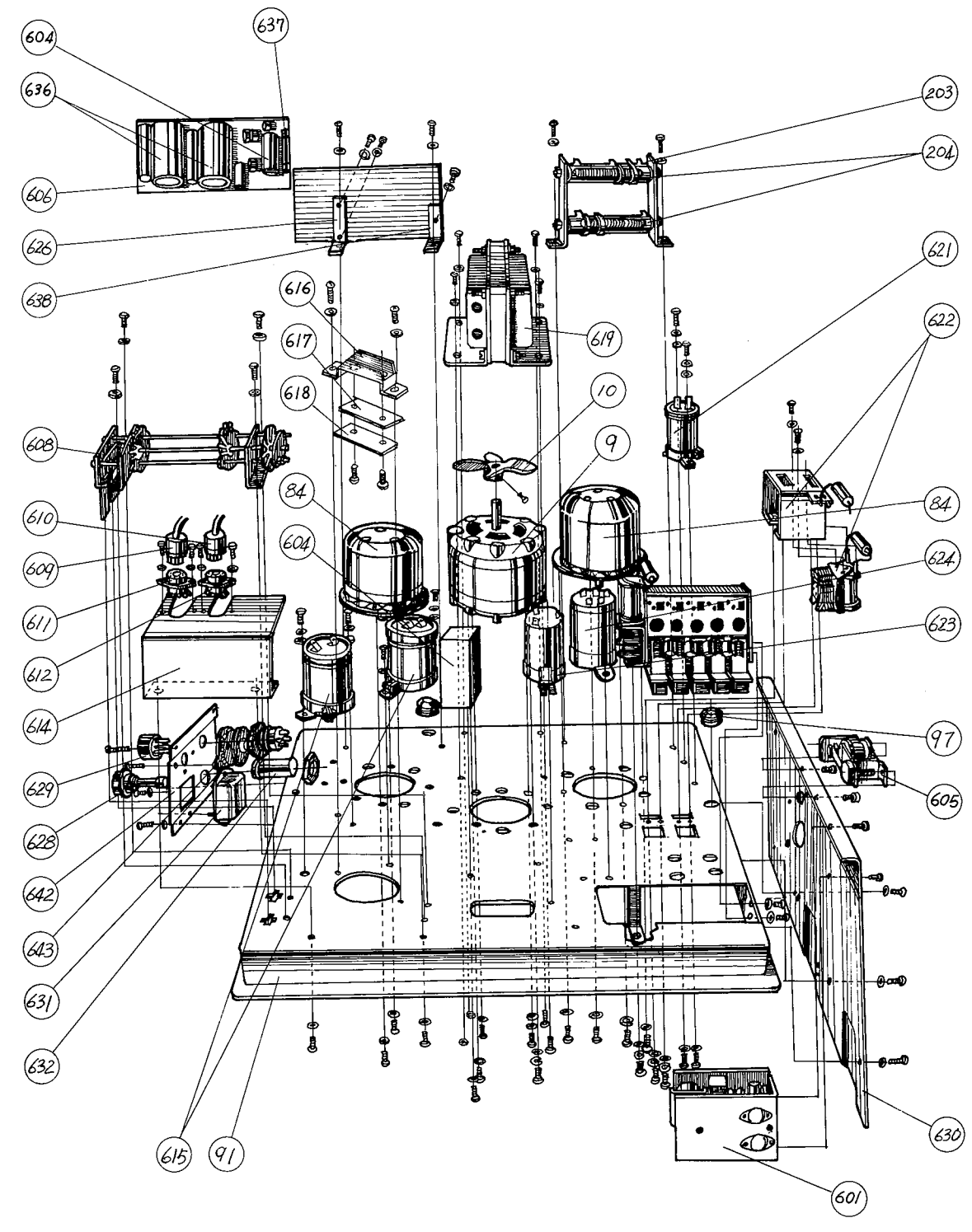

FIG. 14 TAPE TRANSPORT-BOTTOM, EXPLODED VIEW

TAPE TRANSPORT-TOP

REF. NO.	PART NO	DESCRIPTION
61	18014	Shut-off Arm Ass'y
62	18208	Stop Ring
63	22034	Arm Spring
64	18227	Arm Cover
65	18215	Stopper
66	44611	Shut-off Switch
67	18216	Magnet
68	1821[illegible]7	Magnet Catcher
71	1822[illegible]22	Compliance Arm
72	181[illegible]82	Arm Holder
73	182[illegible]25	Retaining Nut
74	18[illegible]221	Compliance Ass'y
75	44[illegible]956	Sensing Ass'y
76	1[illegible]8207	Arm Holder Nut
77	18224	Spring
78	27281	Counter Escutcheon
79	16147	Reel Pad
80	16140	Reel Holder
81	16148	Reel Table
82	17185	Brake Drum
83	17172	Brake Guard
84	70214	Reel Motor
85	18176	Arm Shaft
86	50505	Index Counter
87	27119	Counter Retainer
88	27142	Counter Belt
90	11164	Face Plate
91	11152-1	Transport Chassis
92	14152	Roller Arm Shaft
95	25110	Speed Selector Button
96	25160	Speed Selector Switch Lever
97	27048	Rubber Grommet
100	13013	Head Ass'y
400	25015	Transport Selector Switch Ass'y
7	12256	Motor Pulley
8	12225	Capstan Drive Belt
11	12248	Dust Cap
15	15007	Tape Lifter Ass'y
25	14009	Pinch Roller Ass'y
27	15012	Pinch Roller Link Arm Ass'y
50	17002	Brake Mounting Base Ass'y
120	13357	Head Housing
121	[illegible]367	Head Housing Face Plate (A-1500)
	1337[illegible]	(A-1600)
205	11693	Stiffener
525	44407	

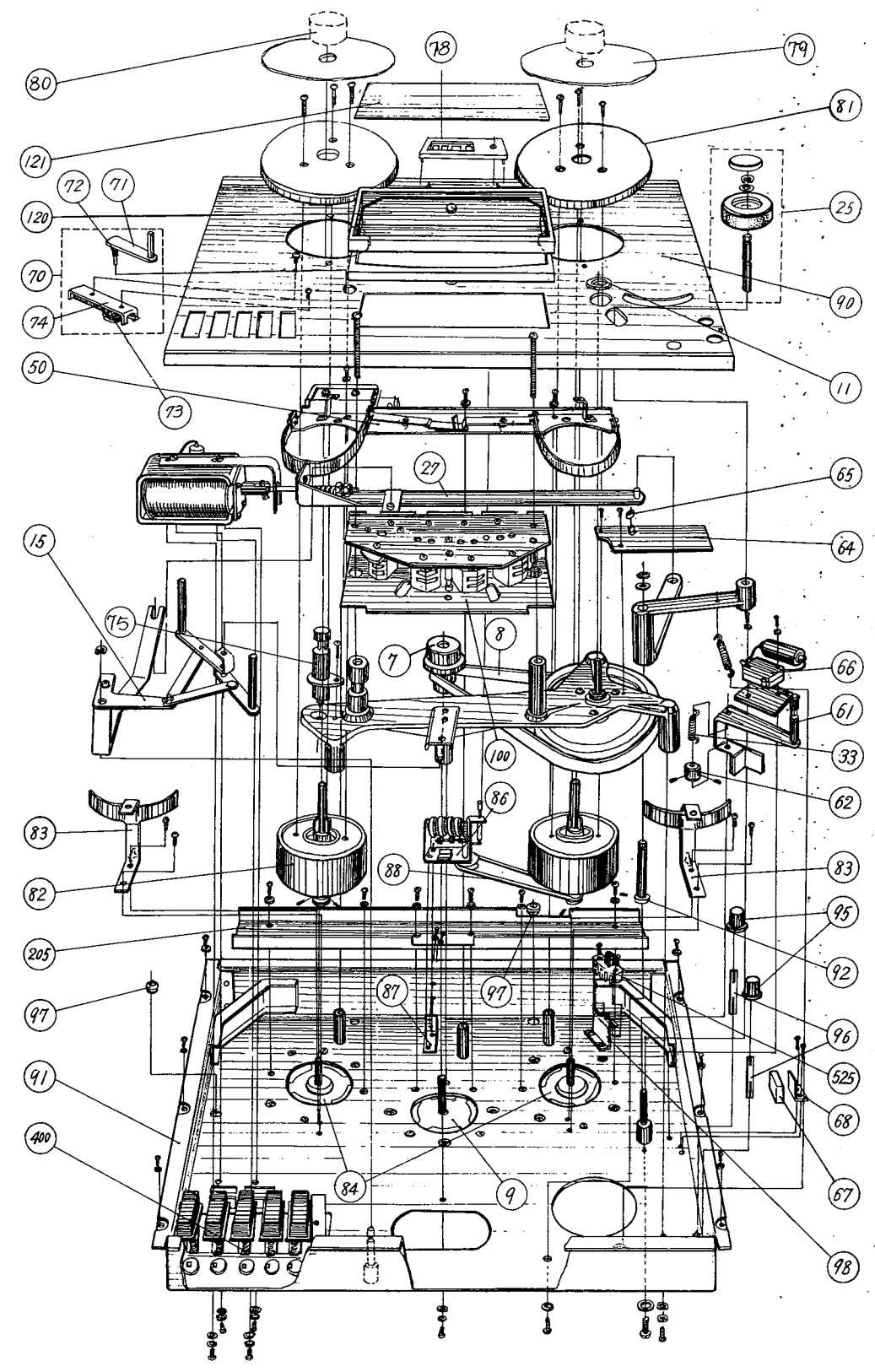

FIG. 13 TAPE TRANSPORT-TOP, EXPLODED VIEW