Sunn

SENTURA I & SOLARIS

sunn

Sentura I
Solarus

Sentura I: One J.B.L. D130F (D15S after 3-1-69) in tuned port enclosure.

Solarus: Two 12-inch Sunn transducers (Appendix 1) in open back enclosure. One piece construction until 3-10-69; then piggyback.

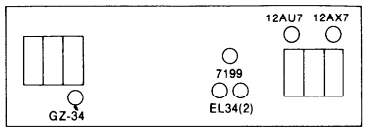

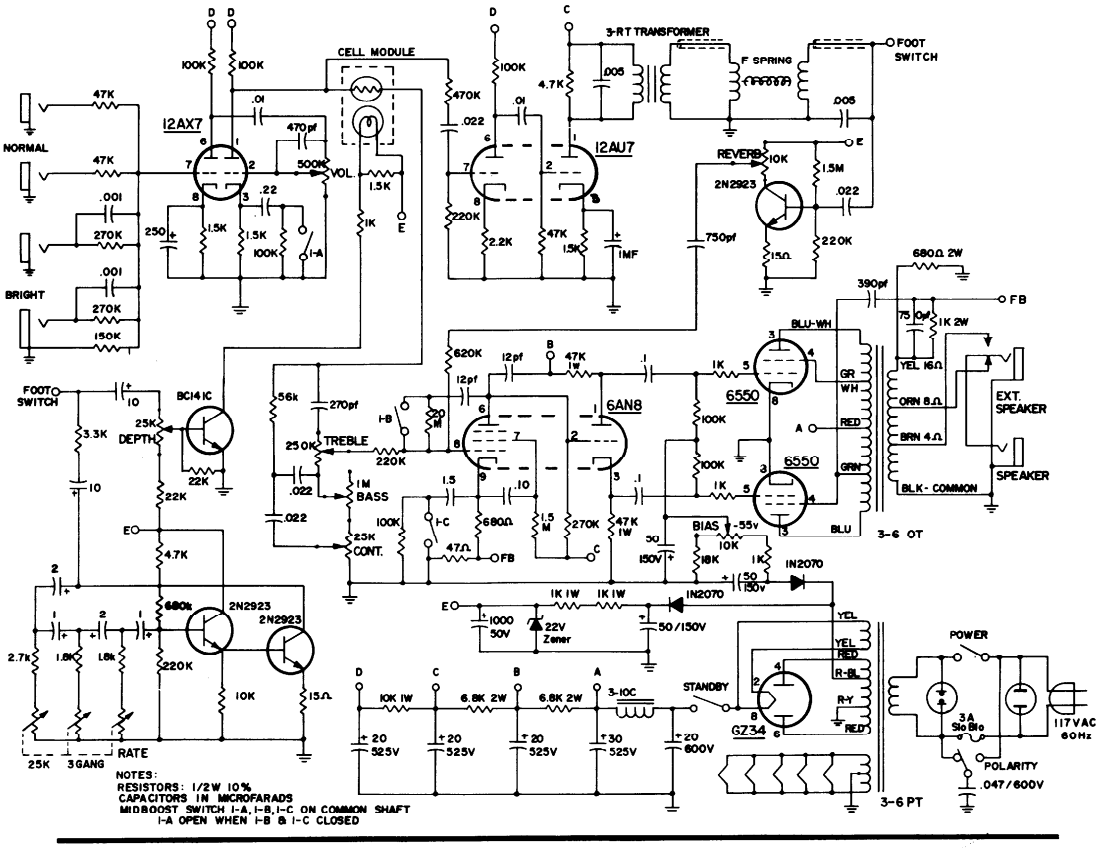

copyright 1969 sunn musical equipment company printed in U.S.A.

design/production: kinetic design