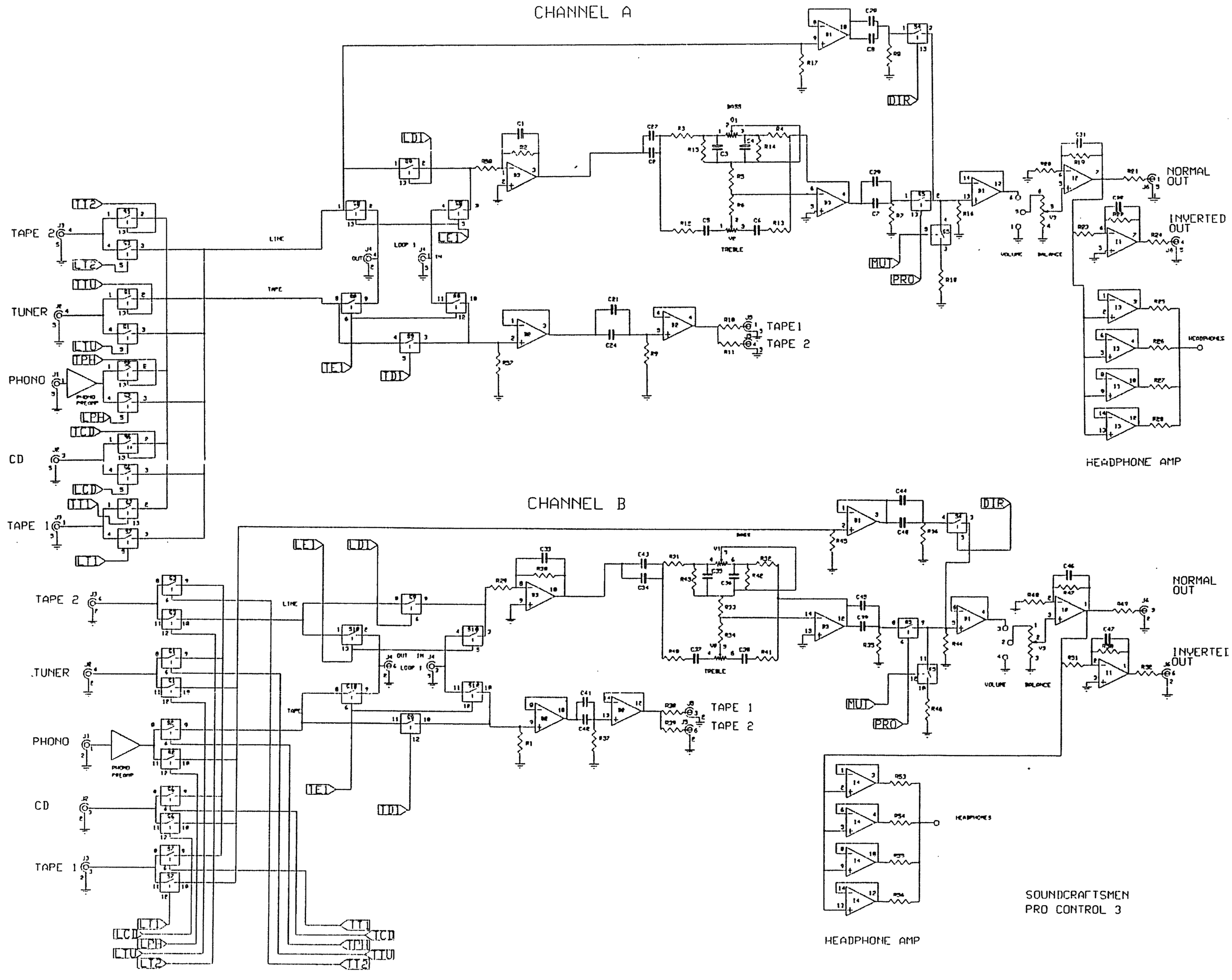
CHANNEL A
CHANNEL B
TAPE 2
TUNER
PHONO
CD
TAPE 1
LINE
TAPE
LOOP 1
BASS
TREBLE
DIR
MUT
PRO
VOLUME
BALANCE
NORMAL OUT
INVERTED OUT
TAPE1
TAPE 2
HEADPHONES
HEADPHONE AMP
SOUNDCRAFTSMEN
PRO CONTROL 3

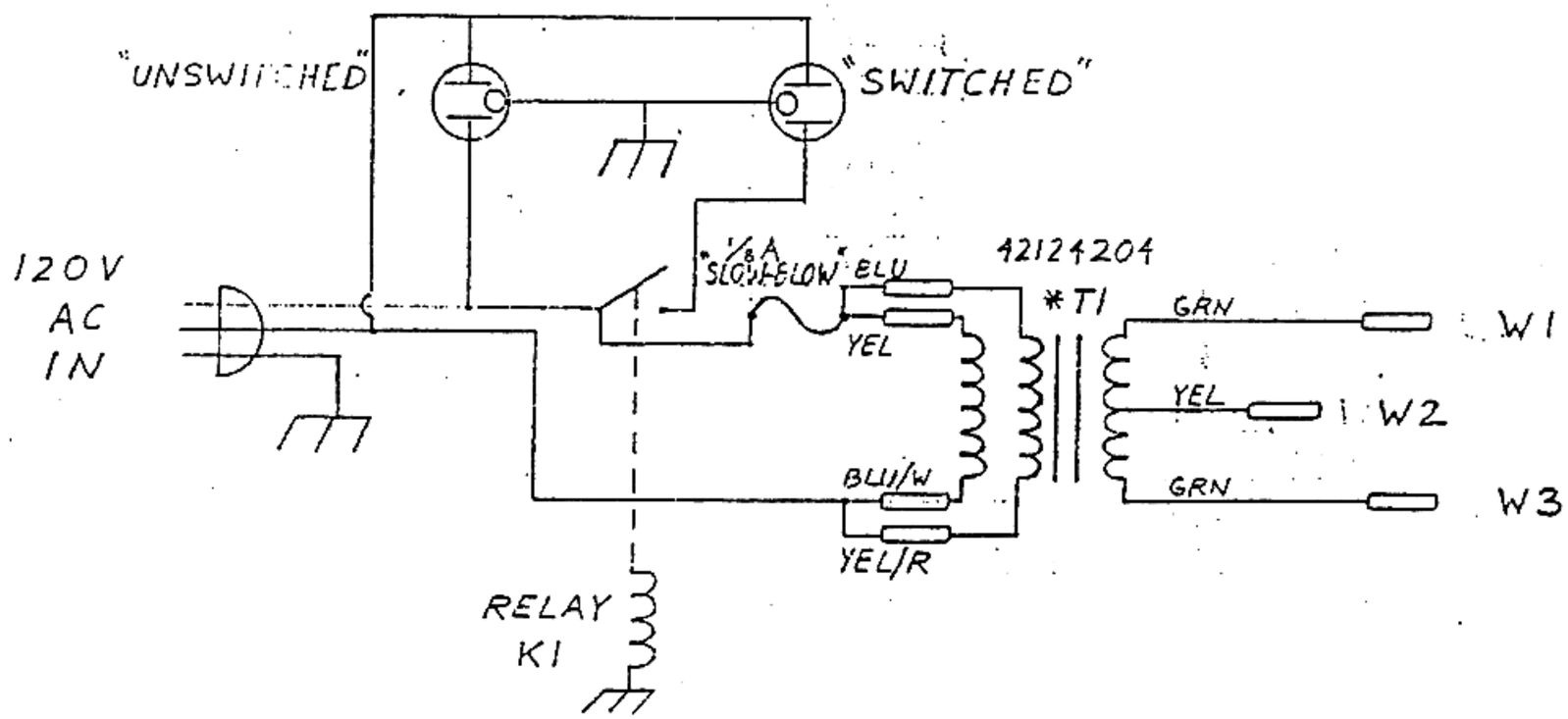

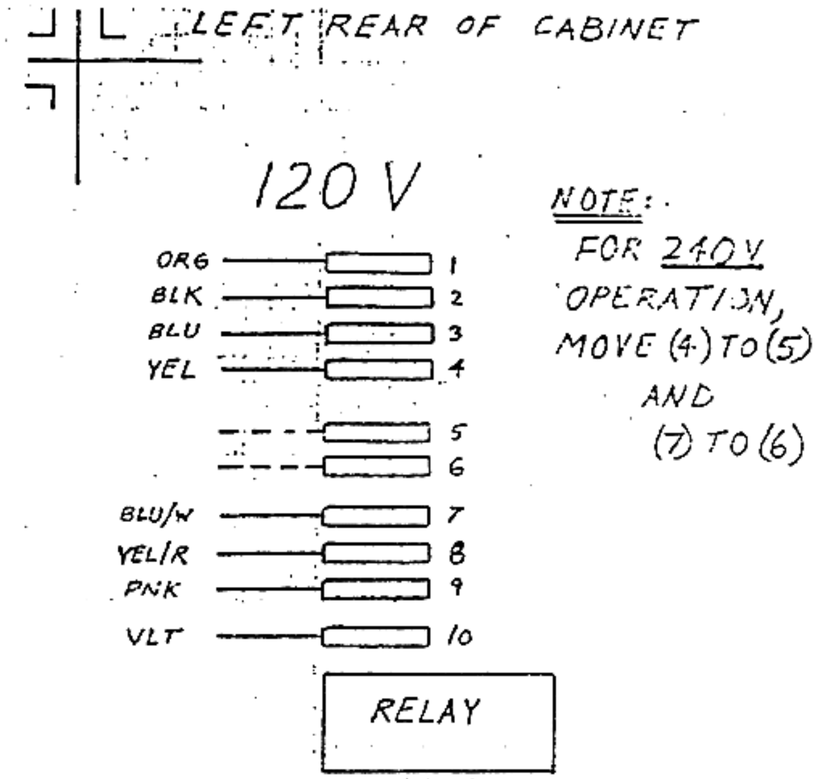

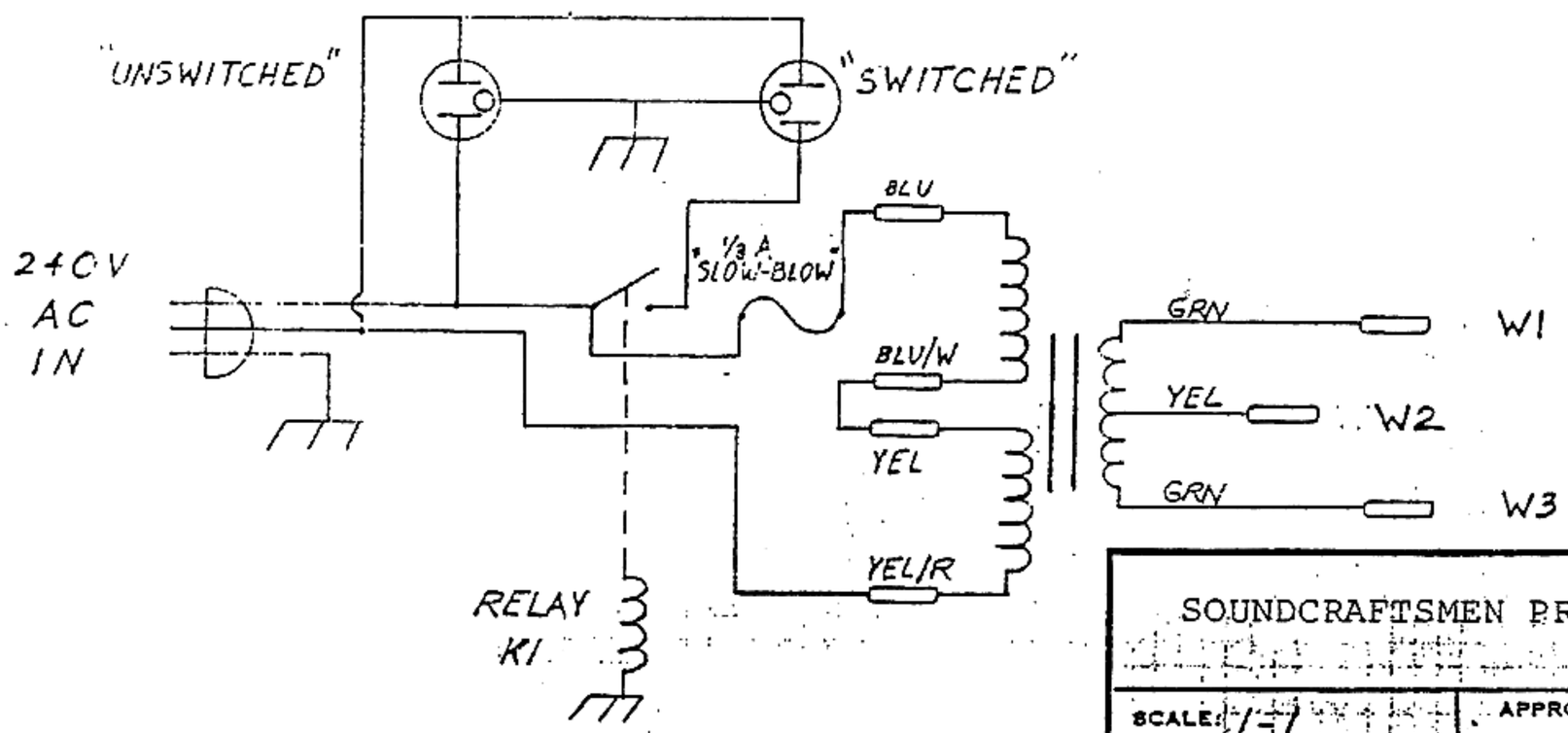

SOUNDCRAFTSMEN PRO-CONTROL THREE PREAMPLIFIER

SCALE: 1-1	APPROVED BY:	DRAWN BY B.H.
DATE: 10/14/87		REVISED

SCHEMATIC: A.C. WIRING

DRAWING NUMBER

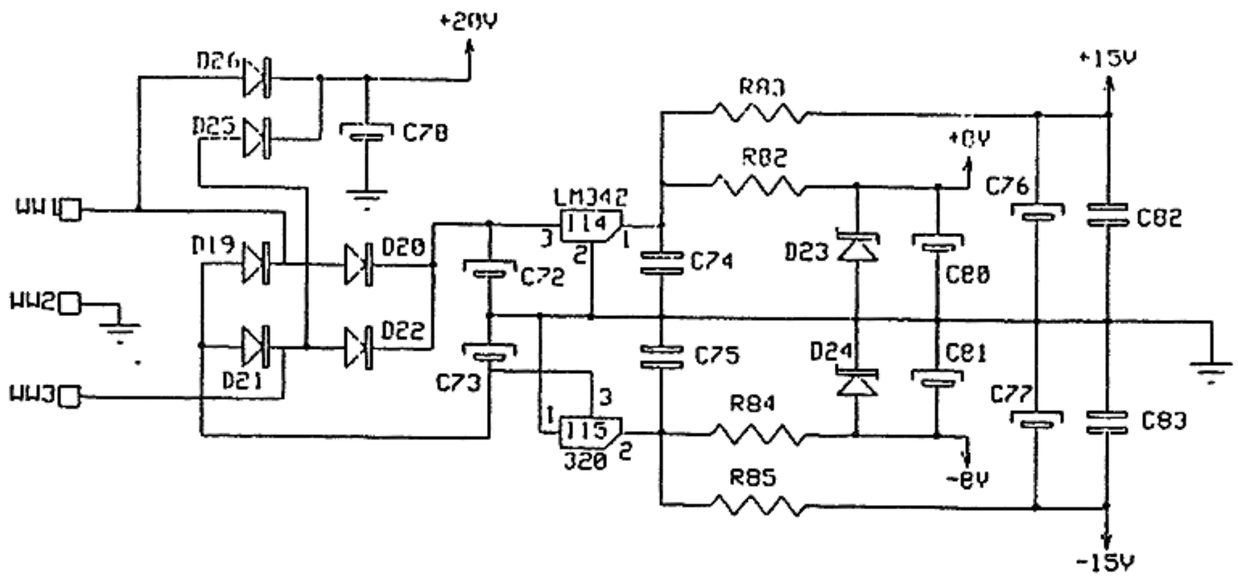

POWER SUPPLY

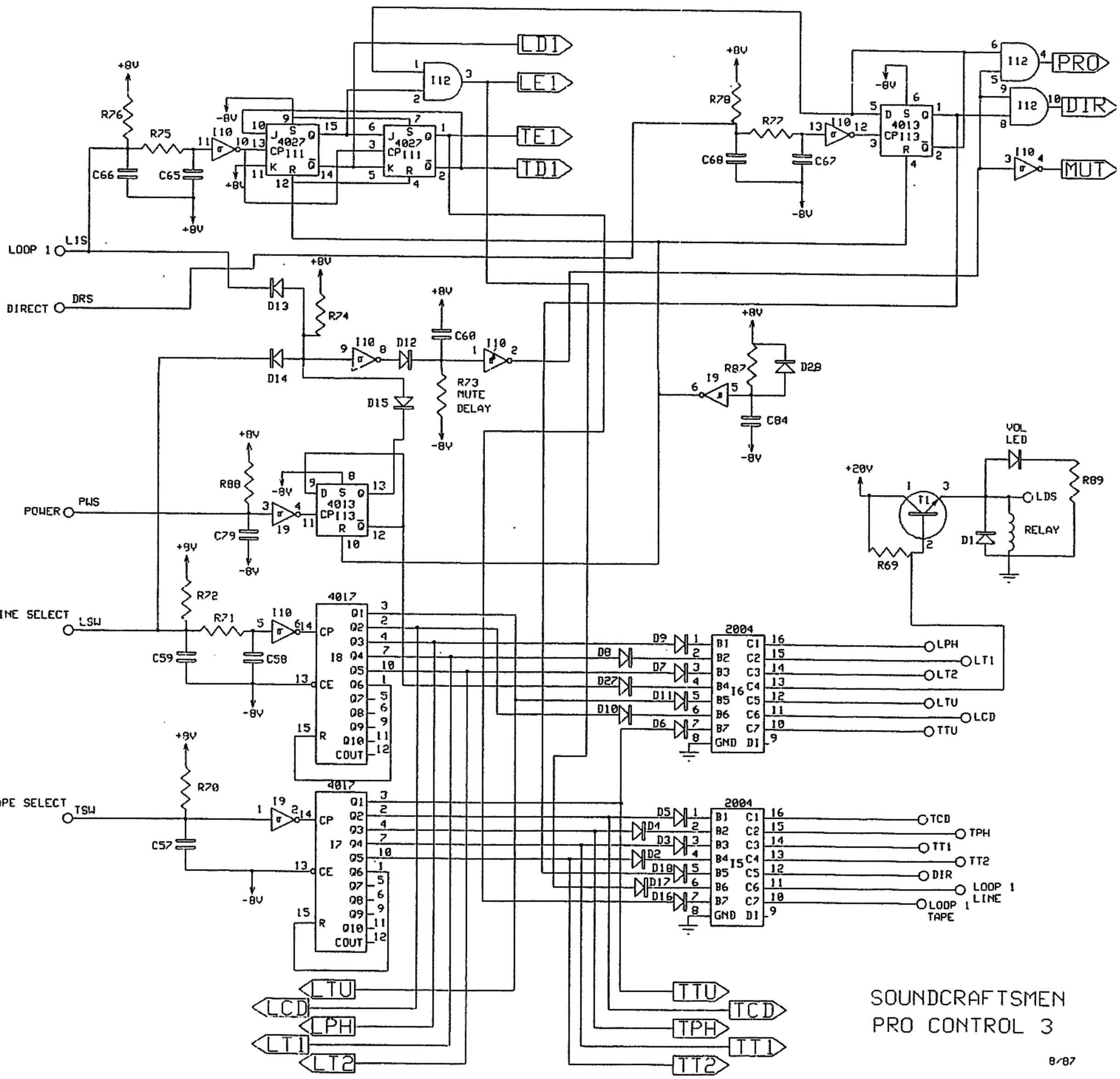

SOUNDCRAFTSMEN
PRO CONTROL 3

8/87

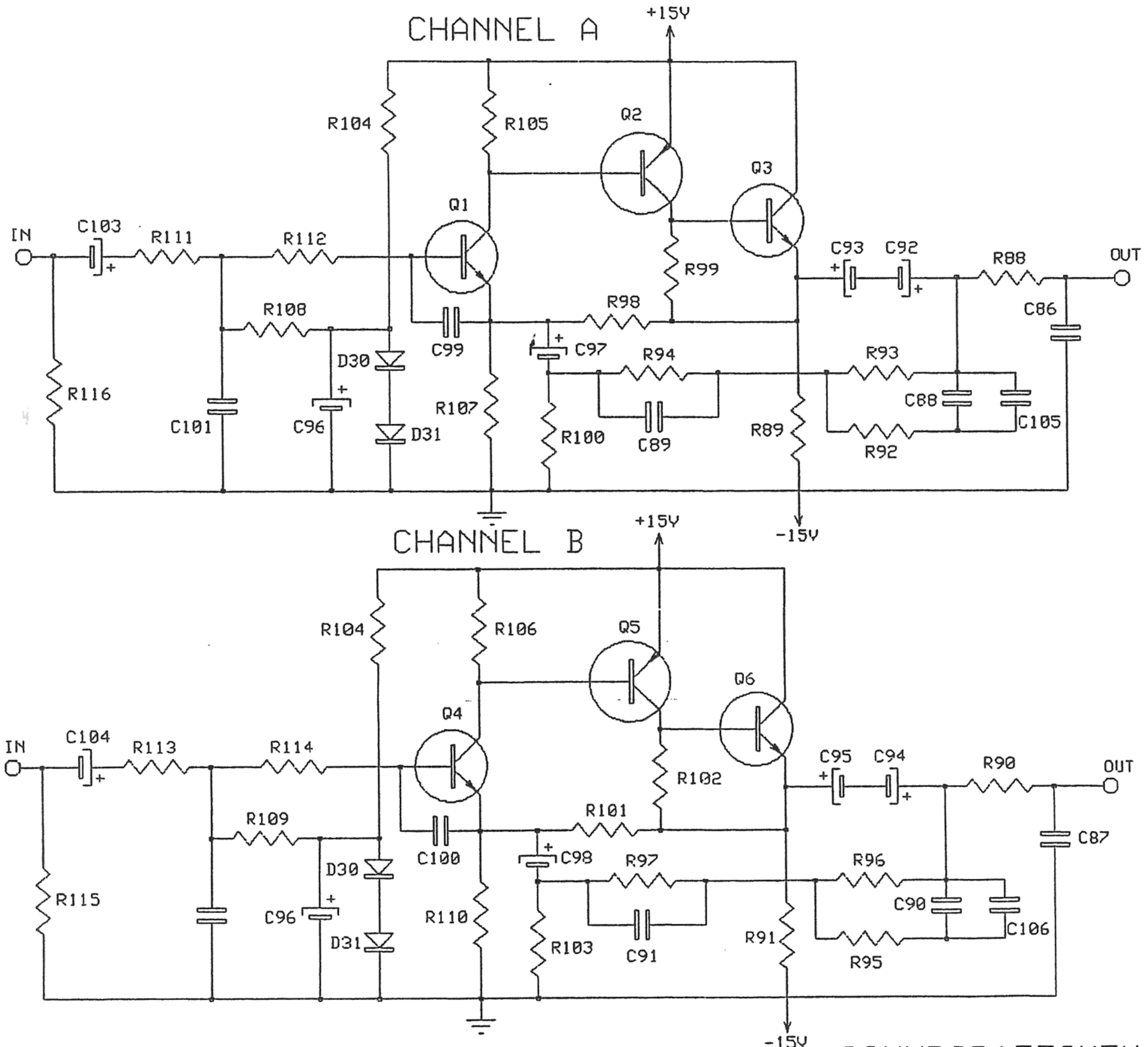
CHANNEL A
+15V
R104
R105
Q2
Q3
Q1
IN
C103
R111
R112
R99
C93
C92
R88
OUT
R108
R98
C86
C99
C97
D30
R94
R93
R116
R107
C88
C101
C96
D31
R100
C89
R89
C105
R92
+15V
-15V
CHANNEL B
R104
R106
Q5
Q6
Q4
IN
C104
R113
R114
R102
C95
C94
R90
OUT
R109
R101
C87
C100
C98
D30
R97
R96
R115
C96
R110
C90
D31
R103
C91
R91
C106
R95
-15V
SOUNDCRAFTSMEN
PRO CONTROL 3
PHONO PREAMP
10/87

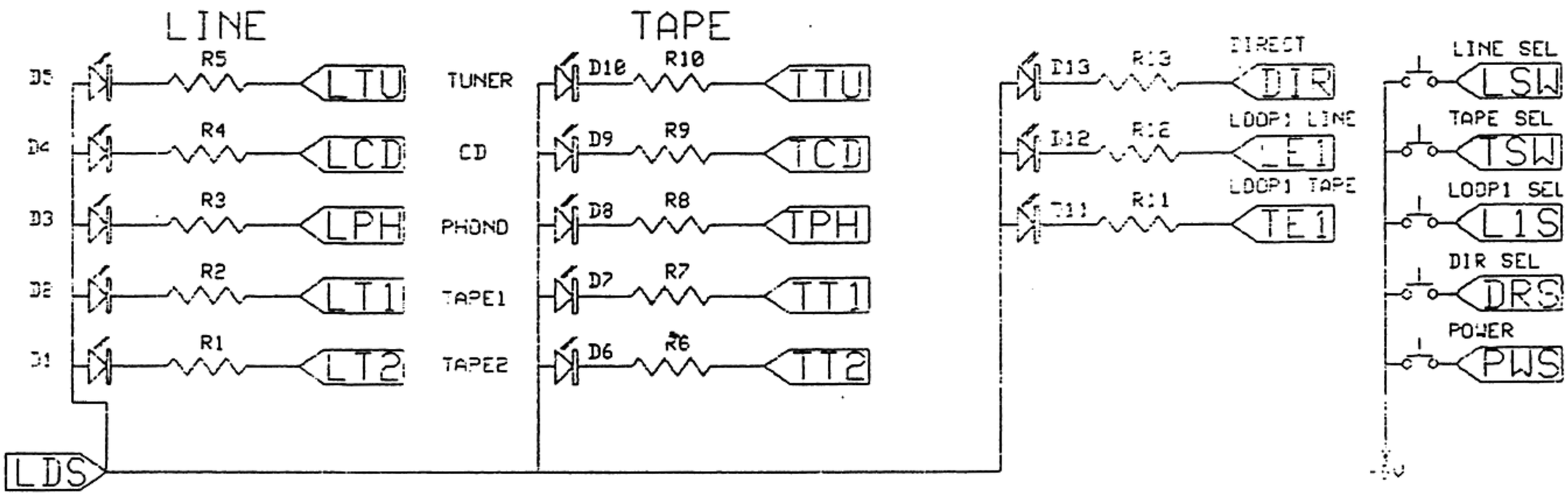

PRO CONTROL THREE

SOUNDCRAFTSMEN
19/97

SOUNDCRAFTSMEN PRO-CONTROL THREE PREAMPLIFIER

SCALE:	APPROVED BY:	DRAWN BY
DATE:		REVISED

L.E.D. BOARD

DRAWING NUMBER