HiFi ENGINE®

For more Hi-Fi manuals and set-up information
please visit www.hifiengine.com

QS
4-CHANNEL STEREO

SERVICE MANUAL

4-CHANNEL RECEIVER

SANSUI QRX-2000

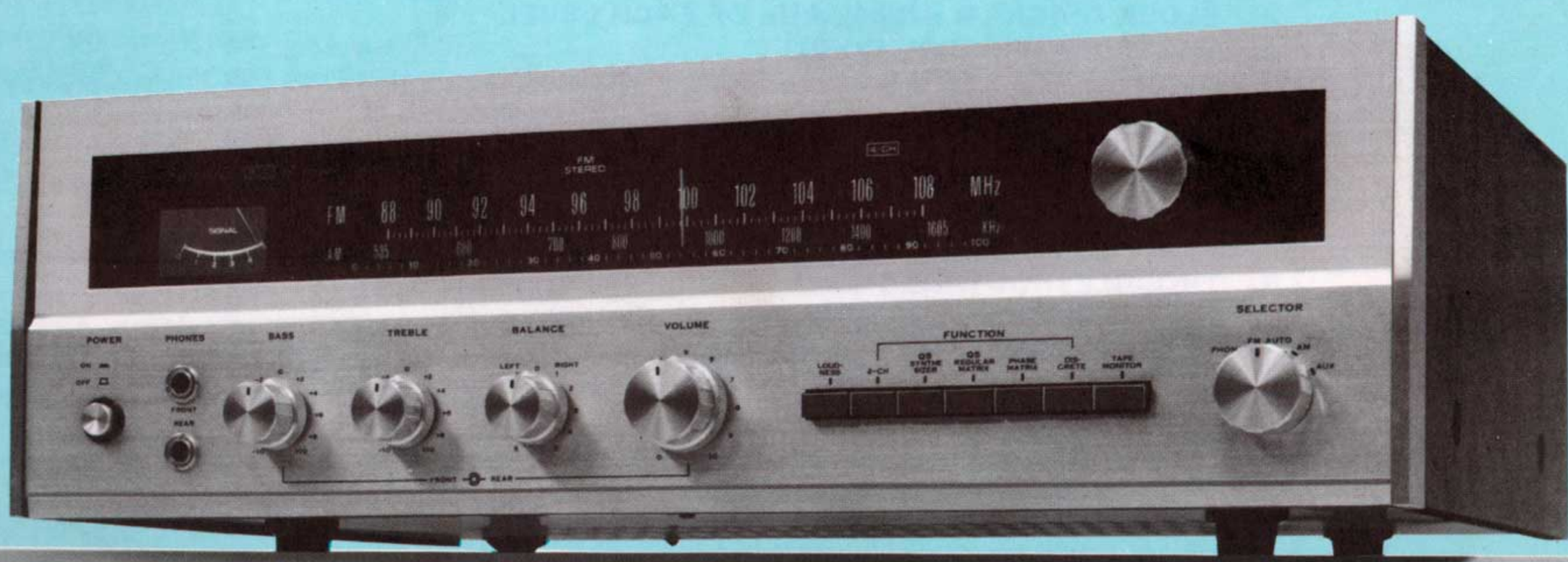

Sansui

SANSUI ELECTRIC CO., LTD.

www.hifiengine.com

This service manual is designed for service engineers to repair, adjust, maintain and order the replacement parts of the QRX-2000 correctly. When ordering the parts, use the stock number and parts name specifically referring to the Parts Locations & Parts List.
For general usage and maintenance of the unit, please refer to the Operating Instructions attached with the unit.

TABLE OF CONTENTS

Section	Title	Page
1.	**SPECIFICATIONS**	2
2.	**BLOCK DIAGRAM AND VALUE OF EACH LEVEL**	3
3.	**THREADING OF DIAL CORD**	4
4.	**ALIGNMENTS AND ADJUSTMENTS**	5
4-1.	Driver Circuit Board Adjustment	5
4-2.	FM IF Alignment	5, 6
4-3.	FM Dial Calibration and RF Alignment	6
4-4.	MPX Alignment	7
4-5.	AM IF, Dial Calibration, RF Alignment	7, 8
5.	**TROUBLESHOOTING CHART**	9
5-1.	Troubleshooting on Power Supply Section	9
5-2.	Troubleshooting on Audio Section	9
5-3.	QS SYNTHESIZER or QS REGULAR MATRIX of FUNCTION Switch inoperative (2-CH of FUNCTION switch inoperative)	9
5-4.	Troubleshooting on Tuner Section	9, 10
6.	**PARTS LOCATIONS AND PARTS LISTS**	11
6-1.	F-1493 Equalizer Circuit Board	11
6-2.	F-1496 Tone Control & Power Supply Circuit Board	12
6-3.	F-1498A Tuner Circuit Board	13, 14
6-4.	F-1492 Vario-Matrix Circuit Board	15, 16, 17
6-5.	F-1495 Driver Circuit Board	18
6-6.	Other Parts (Front Side)	19, 20
6-7.	Other Parts (Top Side)	21
6-8.	Other Parts (Bottom Side)	22
7.	**PACKING LIST**	23
8.	**ACCESSORY PARTS LIST**	23
9.	**SCHEMATIC DIAGRAM OF TUNER SECTION**	24
10.	**SCHEMATIC DIAGRAM OF AUDIO SECTION**	25

www.hifiengine.com

1. SPECIFICATIONS

AUDIO SECTION

POWER OUTPUT (at rated distortion)
- MUSIC POWER (IHF) ..... 80Watts into 4Ω
  60Watts into 8Ω
- CONTINUOUS POWER (1kHz, each channel driven)
  ..... 17Watts/Channel into 4Ω
  12Watts/Channel into 8Ω
- CONTINUOUS POWER (1kHz, 4 channels driven)
  ..... 7×4Watts into 8Ω
- 2-CHANNEL OPERATED CONTINUOUS POWER (1kHz, 2 channels driven)
  ..... 11×2Watts into 8Ω

TOTAL HARMONIC DISTORTION
..... less than 0.8% at rated output

INTERMODULATION DISTORTION
(70Hz : 7,000Hz=4 : 1 SMPTE method)
..... less than 0.8% at rated output

POWER BANDWIDTH .... 25 to 30,000Hz

LOAD IMPEDANCE ..... 4 to 16Ω

DAMPING FACTOR ..... approximately 20 at 8Ω load

INPUT SENSITIVITY AND IMPEDANCE
(1kHz, for rated output)
- PHONO 3mV 50kΩ
  Max. Input Capability .. more than 80mV at 0.5% distortion
- AUX 170mV 50kΩ
- TAPE PLAY (Pin Jack) 170mV 50kΩ
- TAPE REC/PLAY (DIN Socket) .. 170mV 50kΩ

RECORDING OUTPUT
- TAPE REC (Pin Jack) 170mV
- TAPE REC/PLAY (DIN Socket) .. 30mV

FREQUENCY RESPONSE (at 1Watt output from AUX)
..... (30 to 30,000Hz ±1.5dB)

EQUALIZATION .... RIAA Curve 30 to 15,000Hz ±1dB

CROSSTALK (FUNCTION: 2-CH)
..... better than 50dB

HUM AND NOISE (IHF)
- PHONO ..... better than 70dB
- AUX ..... better than 80dB

CONTROLS
- BASS ..... ±10dB at 50Hz
- TREBLE ..... ±10dB at 15,000Hz
- LOUDNESS ..... +8dB at 50Hz, +3dB at 10,000Hz

SYNTHESIZER/DECODER .... QS regular matrix system with vario-matrix circuit

TUNER SECTION

<FM>

TUNING RANGE ..... 88 to 108MHz

SENSITIVITY (IHF) 2.5μV
- Max. Input Capability .... more than 100dB

TOTAL HARMONIC DISTORTION
- MONO ..... less than 0.5%
- STEREO ..... less than 0.8%

SIGNAL TO NOISE RATIO (mono)
..... better than 60dB

CAPTURE RATIO (IHF) ..... less than 2.5dB

IMAGE REJECTION ..... better than 50dB

IF REJECTION ..... better than 60dB

SUPURIOUS RESPONSE REJECTION
..... better than 60dB

STEREO SEPARATION ..... better than 35dB at 1,000Hz

FREQUENCY RESPONSE .... 30 to 15,000Hz $^{+1}_{-3}$dB

ANTENNA INPUT IMPEDANCE
..... 300Ω balanced, 75Ω unbalanced

SELECTIVITY ..... better than 50dB

<AM>

TUNING RANGE ..... 535 to 1,605kHz

SENSITIVITY (bar antenna) .. 50dB/m

IMAGE REJECTION ..... better than 80dB/m

IF REJECTION ..... better than 80dB/m

SELECTIVITY ..... better than 25dB

OTHERS

SEMICONDUCTORS
- TRANSISTORS 66
- DIODES 34
- FETs 3
- ICs 2
- ZENER DIODES 2

POWER REQUIREMENTS
- VOLTAGE 100, 117, 220, 240V, 50/60Hz
- CONSUMPTION ..... 80Watts (rated), 160VA(max.)

DIMENSIONS ..... 140mm (5 9/16″) H,
460mm (18 1/8″) W,
329mm (13″) D

WEIGHT ..... 9.0 kg (19.8 lbs.) Net
10.7 kg (23.6 lbs.) Packed

* Design and specifications subject to change without notice for improvements.

www.hifiengine.com

2. BLOCK DIAGRAM AND VALUE OF EACH LEVEL

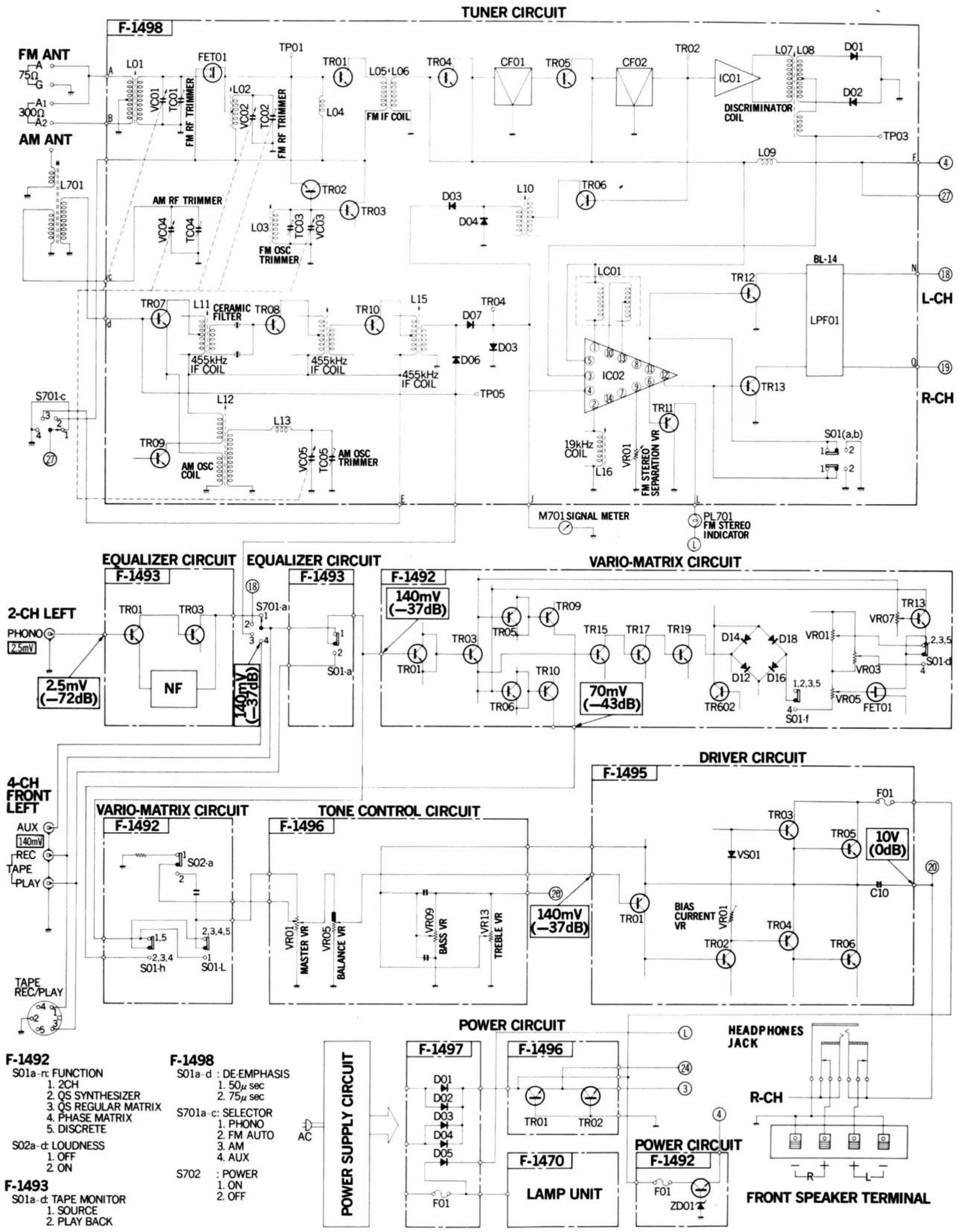

Conditions of Level Measuring

*Value of each level in block diagram was measured by the followings.

1. MASTER VOLUME control ....Maximum
2. BASS, TREBLE, BALANCE volume control ....Center
3. Input ....PHONO 2.5mV 1kHz Sine Wave AUX 140 mV 1kHz Sine Wave (output impedance of 600Ω at an audio oscillator)
4. Output 10V (12W) 8Ω

Note: Each voltage value is for reference and measured by a VTVM. In some recorders, the actual voltage value is in minor difference from the reference value.

3. THREADING OF DIAL CORD

If dial cord is cut or slips, replace cord by following procedures. As QRX-2000 is used 0.6mmϕ cord, please replace it with same type certainly.
* Length of dial cord.....approx. 170cm (67inch)

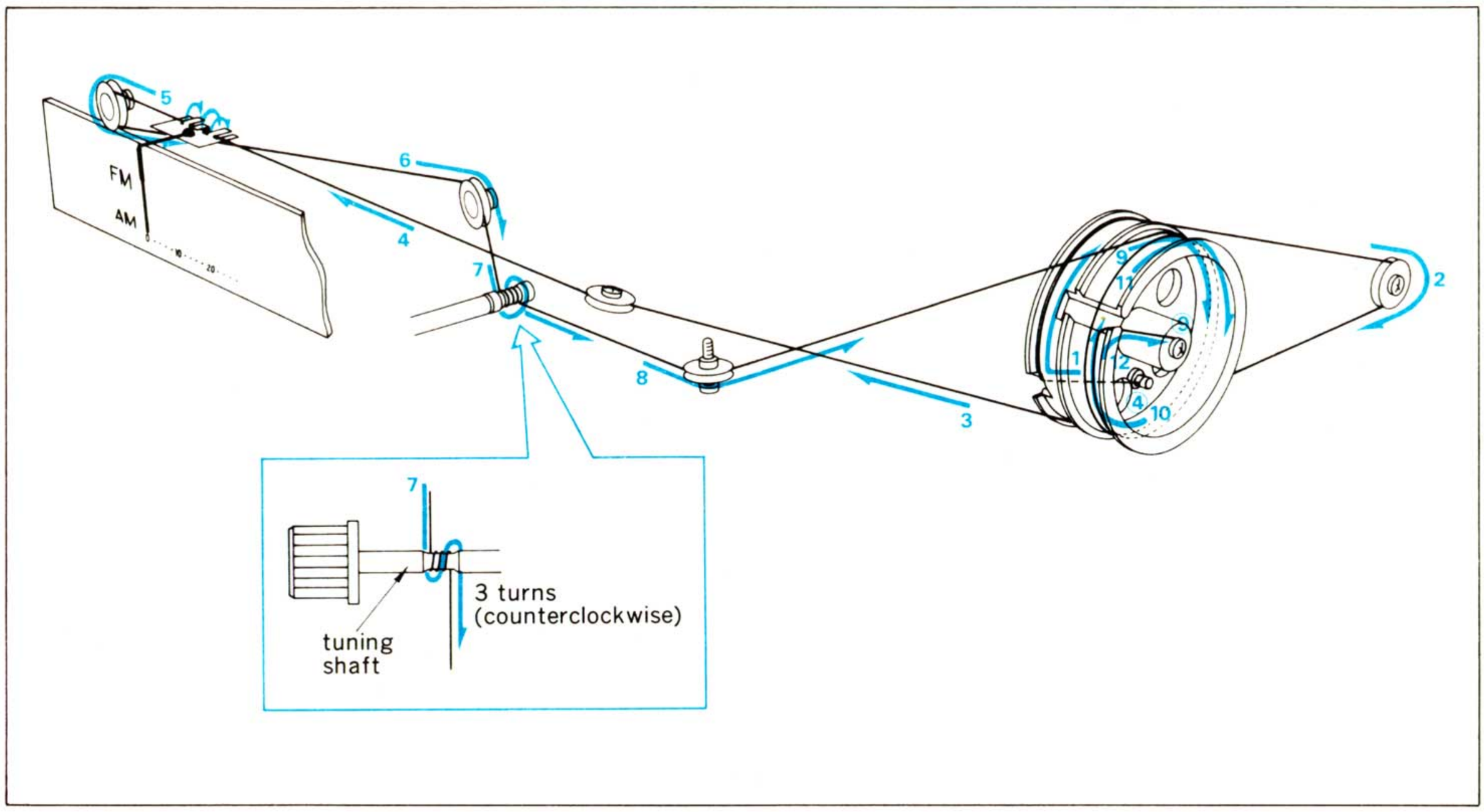

1. Threading of Dial Cord

Thread dial cord in numerical order from 1 to 12 as shown in Fig. 3-1.

1) Close the variable capacitor completely (Max. capacitance) and tie cord to number ④ screw of the dial pulley.
2) Thread cord in the direction of arrow from 1 to 6, then wind cord three turns around the tuning shaft counterclockwise.
3) Thread cord in the direction of arrow from 7 to 8, then wind it two turns on the dial pulley from 9 to 12.
4) After 12, tie cord to number ⑨ screw of the dial pulley.
   * When you perform procedure 4) successfully, please refer to the followings.
   ①To strengthen the dial cord tension, hold around the end of cord and pull it toward the Front Panel.
   ②Then, turn tuning shaft counterclockwise, as the cord tension will be more constantly obtained.
   ③Tie the cord to number ⑨ screw of the dial pulley (same as procedure 4).
5) After procedures, lock the knots of cord with paint.

Stock No.	Description
6036050	Dial Cord (0.6mmϕ)

www.hifiengine.com

4. ALIGNMENTS AND ADJUSTMENTS

Abbreviation

Equipment

AM FM Generator Oscilloscope.....Genescope
AM Standard Signal Generator .....AM SSG
FM Standard Signal Generator .....FM SSG
FM Stereo Generator.....Stereo SG
Oscilloscope .....Scope
Audio Oscillator .....Audio Osci.
Distortion Meter .....Dist. Meter

Others

Clockwise .....CW.
Counterclockwise.....CCW.
Antenna .....ANT.
Modulation.....MOD.

4-1. Driver Circuit Board Adjustment (See Fig. 4-1)

Note: 1. Master Volume.....Minimum
2. Make the SP terminals free (no load).
3. Confirm the AC Power Supply voltage.
4. After adjustment, run the unit for more than 5 minutes, then check and readjust necessary.
5. Room temperature should be 18~28° (65~83°F) for bias current adjustment.

STEP	SUBJECT	EQUIPMENT	MEASURE OUTPUT	ADJUST	ADJUST FOR	CONDITION
1	Bias current	DC milliammeter	F-1495 F01 (Fig. 4-1)	F-1495 VR01	19±1mA	○Step down meter's range accordingly

Fig. 4-1

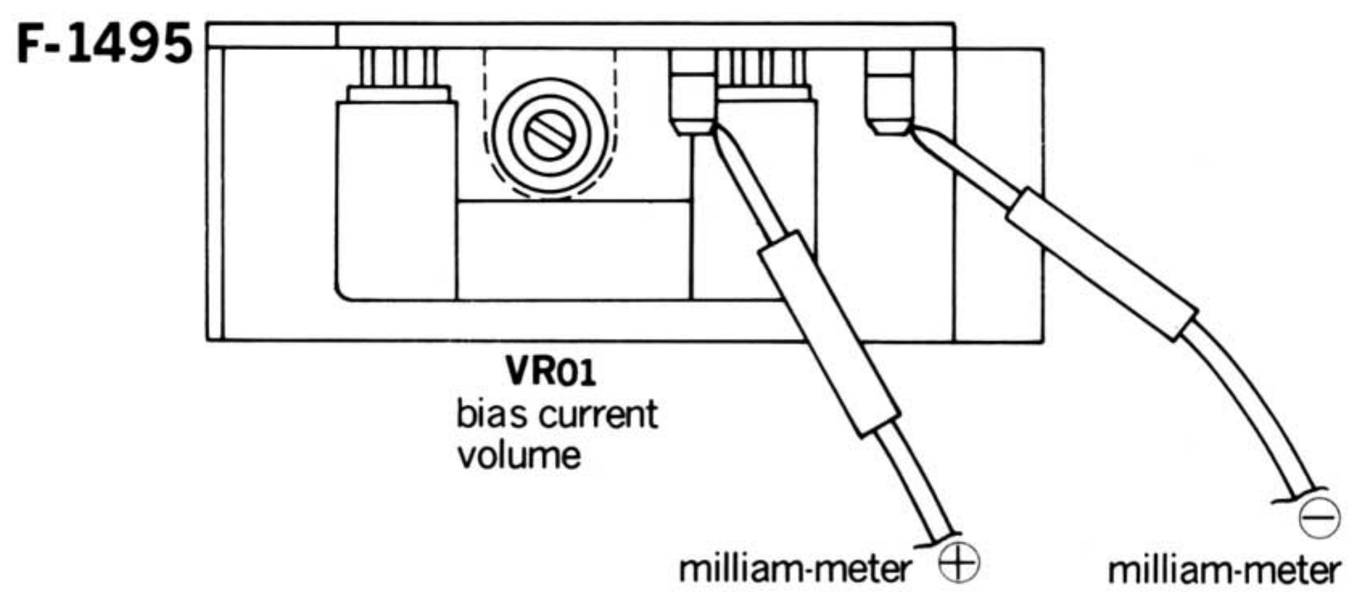

4-2. FM IF Alignment (See Figs. 4-6 and 4-7 on page 8)

Note: 1. Selector.....FM AUTO
2. Master Volume .....Minimum
3. Output level of genescope .....After attenuator
4. Sweepwidth.....1.5~2cm/150kHz
5. Frequency band .....9.5~11.5MHz
6. Connection .....Connect the output of genescope to TP.01 through 100pF ceramic capacitor.

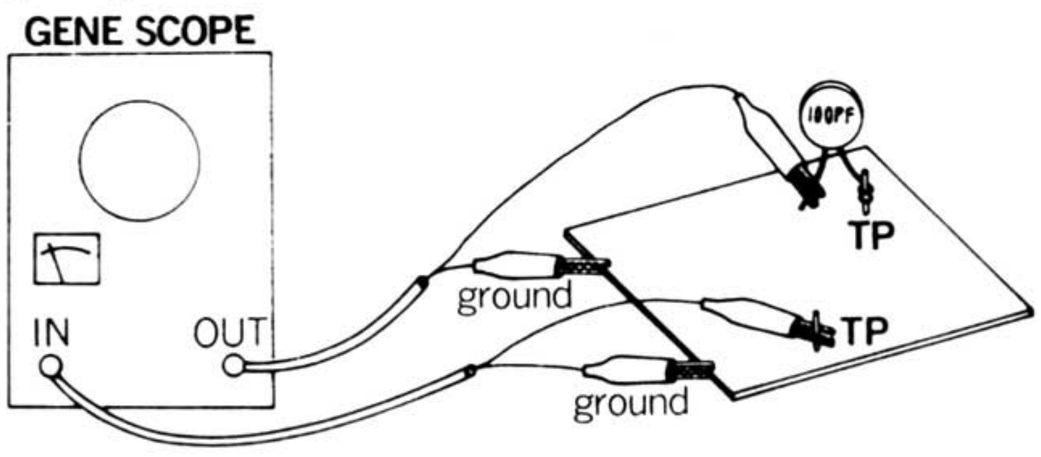

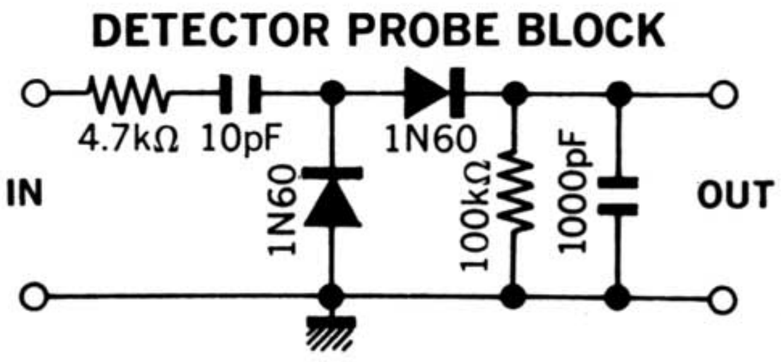

STEP	SUBJECT	FEED SIGNAL		MEASURE OUTPUT	ADJUST	ADJUST FOR	CONDITION
		FROM	TO				
1	IF coil	Output 55dB Genescope	TP. 01 (Fig. 4-7)	TP. 02 (Fig. 4-7) Use Detector Probe	L05, L06	Max. IF waveform 1 as Fig. 4-6	○Turn core of L10 CCW.

STEP	SUBJECT	FEED SIGNAL FROM	FEED SIGNAL TO	MEASURE OUTPUT	ADJUST	ADJUST FOR	CONDITION
2	Meter coil	Same as above	Same as above	TP. 05 (Fig. 4-7) Direct from Genescope	L10	Max. IF waveform 2 Set the center of wavefrom 2 with waveform 1 as Fig. 4-6	
3	Descriminator coil	Same as above	Same as above	TP. 03 (Fig. 4-7) Direct from Genescope	L07 L08	Max. linearity of S curve Set the center of S curve waveform 1 & 2 as Fig. 4-6	

4-3. FM Dial Calibration, Mono Distortion and RF Alignment (See Fig. 4-7 on page 8)

Note: 1. Selector.....FM AUTO
2. Master Volume .....Minimum
3. Confirm start point of dial pointer before alignment.
4. In Step 3, 4 and 5, readjust items of steps 1, 2, it not correctly, and repeat 3, 4 and 5 again.

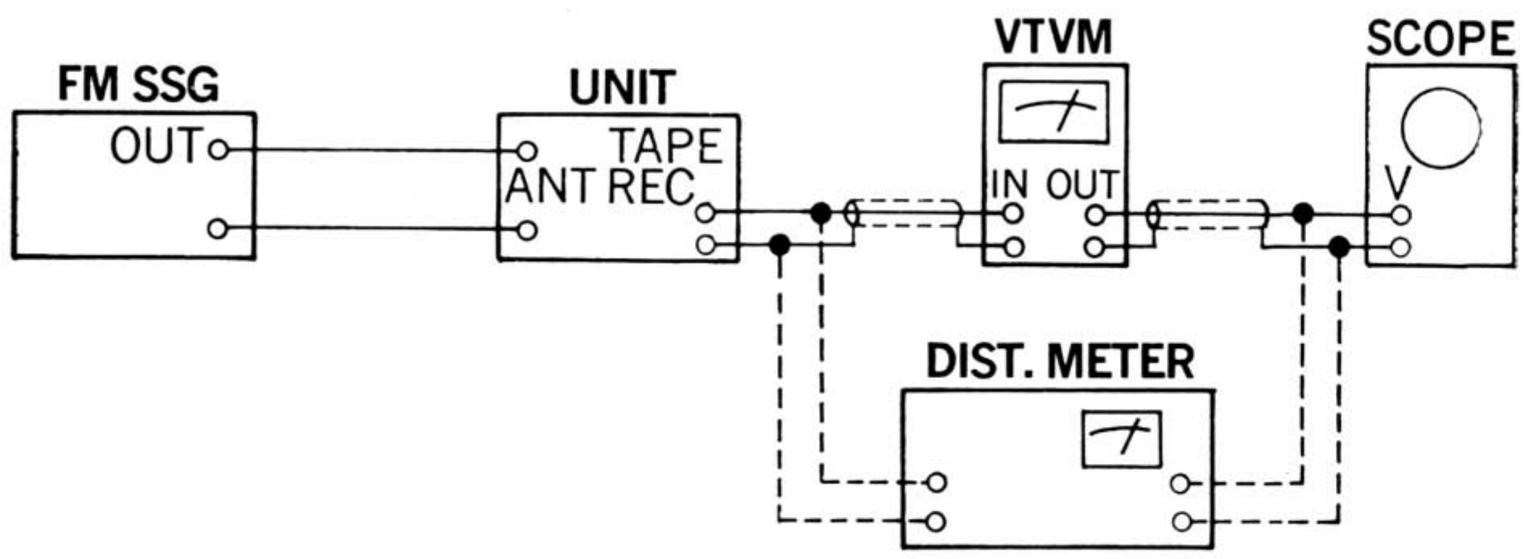

STEP	SUBJECT	FEED SIGNAL FROM	FEED SIGNAL TO	MEASURE OUTPUT	ADJUST	ADJUST FOR	CONDITION
1	88MHz Dial Calibration	88MHz ANT input 60dB 1kHz (100% MOD) FM SSG	ANT terminal 300Ω	REC OUT L or R-ch VTVM & Scope	L03	Max. output	∘Set Dial on 88MHz 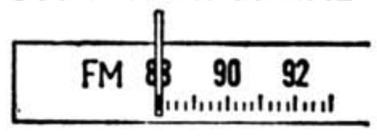
2	108MHz Dial Calibration	108MHz ANT input 60dB 1kHz (100% MOD) FM SSG	Same as above	Same as above	Trimmer TC03	Same as above	∘Set Dial on 108MHz 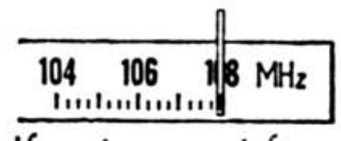
3	Confirm 88MHz Dial Calibration	Same as Step 1	Same as above	Same as above		Confirm 88MHz Dial Calibration	∘If not, repeat from Step 1
4	Confirm 98MHz Dial Calibration	98MHz ANT input 60dB 1kHz (100% MOD) FM SSG	Same as above	Same as above		Confirm 98MHz Dial Calibration	
5	Confirm 108MHz Dial Calibration	Same as Step 2	Same as above	Same as above		Confirm 108MHz Dial Calibration	∘If not, repeat from Step 2
6	88MHz RF Adj.	88MHz ANT input 10dB 1kHz (100% MOD) FM SSG	Same as above	Same as above	L01, L02	Max. output	∘Tune FM SSG (Max. indication of Signal Meter)
7	108MHz RF Adj.	108MHz ANT input 10dB 1kHz (100% MOD) FM SSG	Same as above	Same as above	Trimmer TC01, TC02	Same as above	Same as above
8	Distortion	98MH ANT input 66dB 1kHz (100% MOD) FM SSG	Same as above	REC OUT L or R-ch Dist. meter & Scope	L07	Min. distortion	Same as above

www.hifiengine.com

4-4. MPX Alignment (See Fig. 4-7 on page 8)

Note: 1. Selector .....FM AUTO
2. Master Volume.....Minimum
3. Before adjustment, turn VR05 to center.

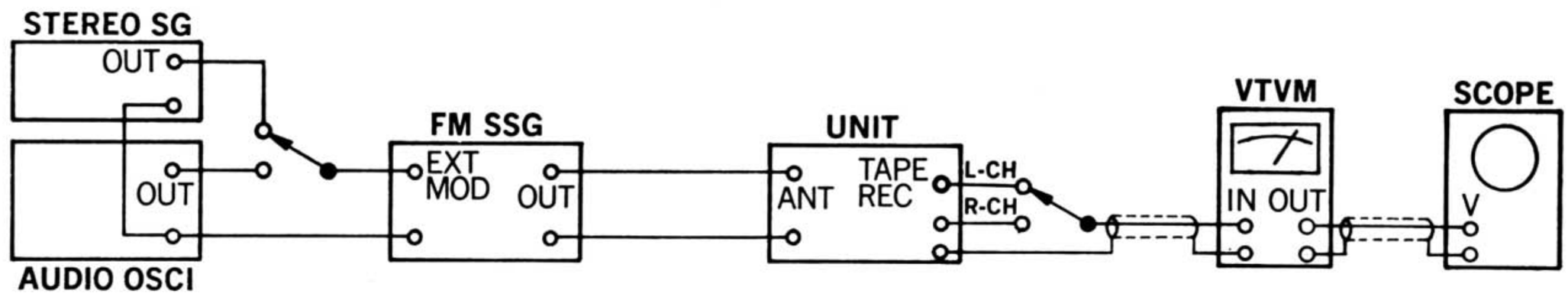

STEP	SUBJECT	FEED SIGNAL FROM	FEED SIGNAL TO	MEASURE OUTPUT	ADJUST	ADJUST FOR	CONDITION
1	19kHz coil	98MHz ANT input 60dB FM SSG Pilot 19kHz (10% MOD) L-ch 1kHz (45% MOD) R-ch (0% MOD) Stereo SG	ANT terminnal 300Ω	REC OUT L-ch VTVM & Scope	L16	Max. output	○Tune FM SSG (Max. indication
2	Separation	Same as above	Same as above	REC OUT R-ch VTVM & Scope	VR01	Min. output	
3	Cofirm Separation	98MHz ANT input 60dB FM SSG Pilot 19kHz (10% MOD) L-ch (0% MOD) R-ch 1kHz (45% MOD) Stereo SG	Same as above	REC OUT L-ch VTVM & Scope		Min. output	○If less the 35dB, adjust VR01

4-5. AM IF, Dial Calibration, RF Alignment (See Figs. 4-3, 4-4, 4-5 and 4-7 on page 8)

Note: 1. Selector.....AM
2. Master Volume .....Minimum
3. Confirm start point of dial pointer before alignment.
4. In case of using loop antenna, increase output of AM SSG for 26dB than bar antenna's direct input as it attenuates input sensitivity for 26dB (See Fig. 4-2).

Fig. 4-2

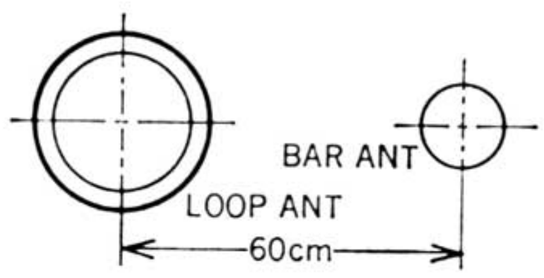

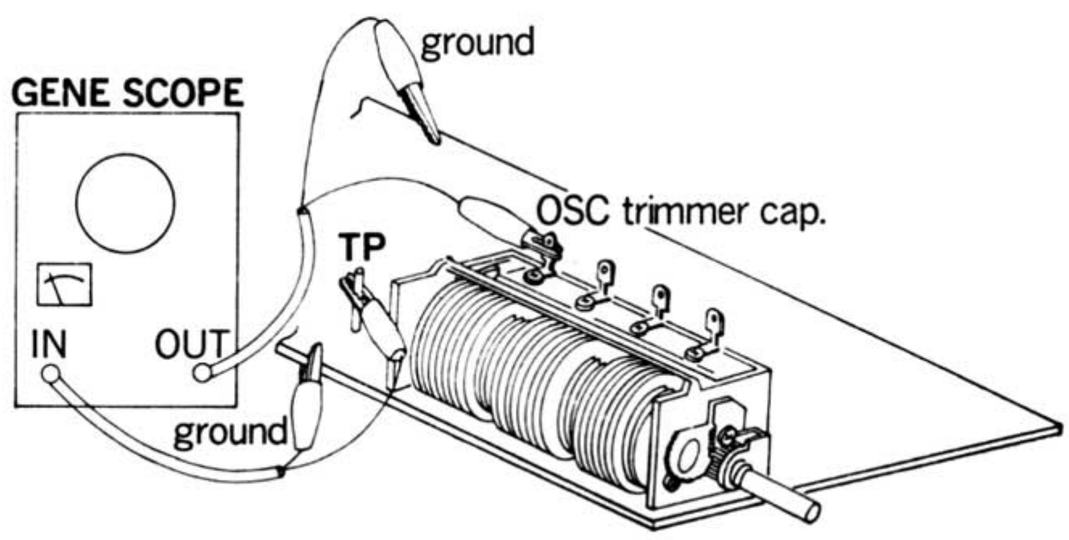

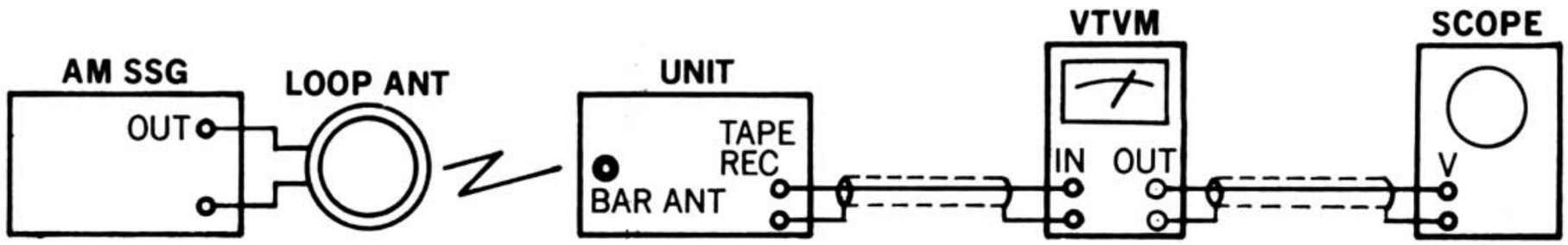

STEP	SUBJECT	FEED SIGNAL		MEASURE OUTPUT	ADJUST	ADJUST FOR	CONDITION
		FROM	TO				
1	IF coil	Output 90dB Genescope	OSC trimmer cap. (TC05) (Fig. 4-7)	TP. 04 (Fig. 4-7)	L13	Max. IF wave-form as Fig. 4-3	o Turn core L14 & L15 CCW.
2	IF coil	Output 70dB Genescope	Same as above	Same as above	L14	Max. IF wave-form as Fig. 4-4	
3	IF coil	Output 60dB Genescope	Same as above	Same as above	L15	Max. IF wave-form as Fig. 4-5	o If not, readjust L13 & L14 slightly
4	535kHz Dial calibra-tion	535kHz ANT input 86dB 400Hz (30% MOD) AM SSG Use loop ANT	Bar ANT	REC OUT L or R-ch VTVM & Scope	L12	Max. output	o If broadcasting station is near, it might be used 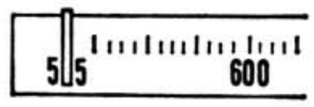
5	1400kHz Dial Calibra-tion	1400kHz ANT input 86dB 400Hz (30% MOD) AM SSG Use loop ANT	Same as above	Same as above	Trimmer Cap. TC05	Same as above	Same as above 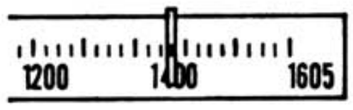
6	Confirm 600kHz Dial Calibra-tion	600kHz ANT input 86dB 400Hz (30% MOD) AM SSG Use loop ANT	Same as above	Same as above		Confirm 600kHz Dial Calibration	o If not, repeat from Step 4
7	Confirm 1000kHz Dial Calibra-tion	1000kHz ANT input 86dB 400Hz (30% MOD) AM SSG Use loop ANT	Same as above	Same as above		Confirm 1000kHz Dial Calibration	
8	Confirm 1400kHz Dial Calibra-tion	Same as Step 5	Same as above	Same as above		Confirm 1400kHz Dial Calibration	o If not, repeat from Step 5
9	600kHz RF Adj.	600kHz ANT input 50dB 400Hz (30% MOD) AM SSG Use loop ANT	Same as above	Same as above	Bar ANT L701	Max. output	
10	1400kHz RF Adj.	1400kHz ANT input 50dB 400Hz (30% MOD) AM SSG Use loop ANT	Same as above	Same as above	Trimmer Cap. TC04	Same as above	

www.hifiengine.com

Fig. 4-3

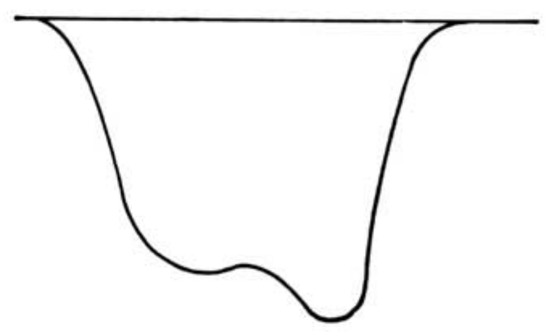

Fig. 4-4

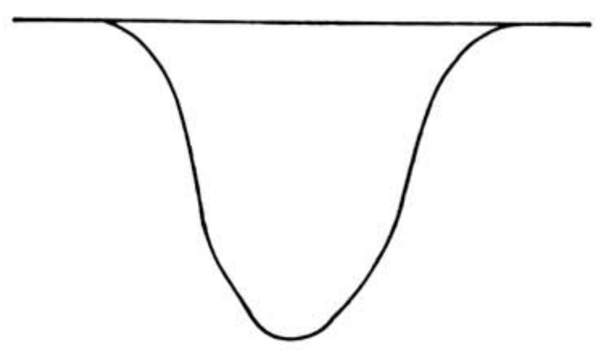

Fig. 4-5

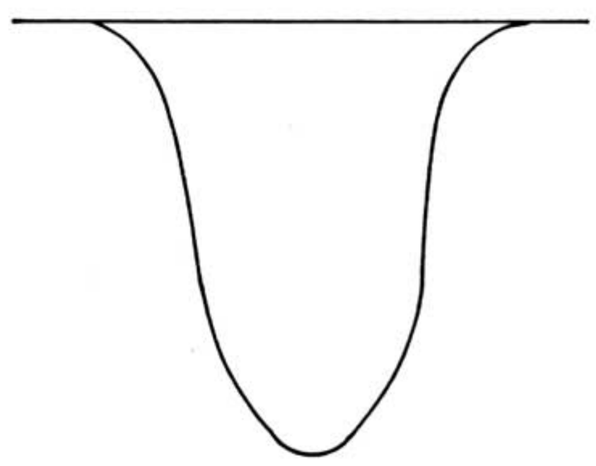

Fig. 4-6

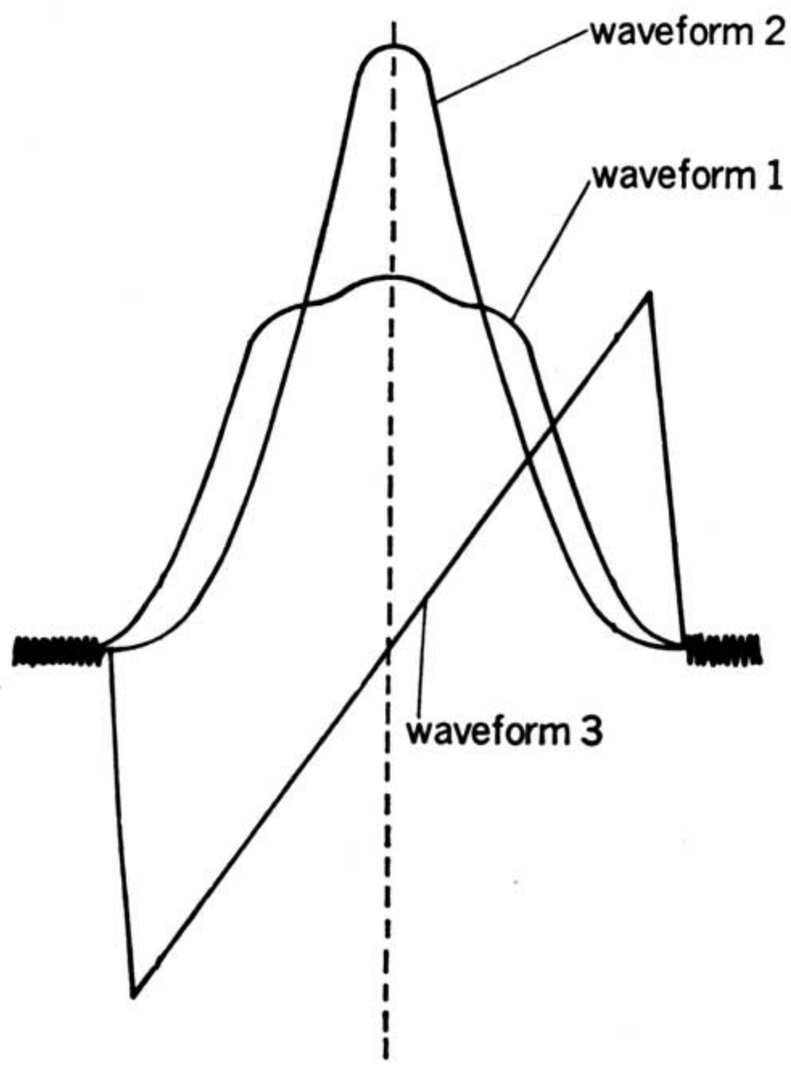

Fig. 4-7

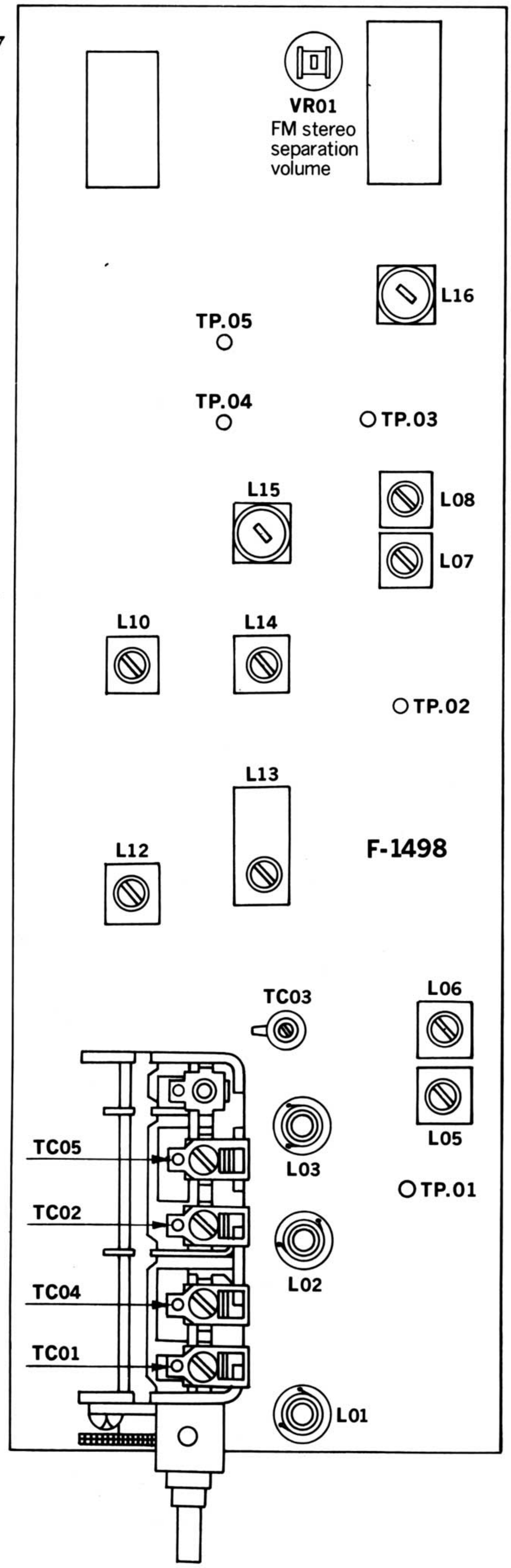

5. TROUBLESHOOTING CHART

5-1. Troubleshooting on Power Supply Section

Symptom | **Check Point** | **Cause & What to Do**

1. No power supplied to each section

1-1. Each lamp not lighted
- 1. Imperfect contact of power supply plug
- 2. Defective power switch S702
- 3. Power fuse F701 opens
- 4. F01 on F-1497 opens
- 5. Defective power transformer T701

1-2. Each lamp lighted
- 1) +44V not supplied to collector of TR601 on F-1496 — 6. Defective D01~D04 on F-1497
- 2) +40V not supplied to emitter of TR601 on F-1496 — 7. Defective TR601 on F-1496
- 3) +38V not supplied to emitter of TR602 on F-1496 — 8. Defective TR602 on F-1496

5-2. Troubleshooting on Audio Section

1. Quick acting fuse open

1-1. After replacement, fuse opens again
- 9. Defective TR05 or TR06 on F-1495
- 10. Defective TR03 or TR04 on F-1495
- 11. Defective VS01 on F-1495
- 12. Defective VR01 on F-1495

1-2. After replacement, fuse opens
- 1) DC bias current adjustable — 13. Set the bias current to +10mA by VR01 on F-1495 (See page 5)
- 2) DC bias current not adjustable
  - 14. Defective VR01 on F-1495
  - 15. Defective TR02 on F-1495

2. Quick acting fuse not opens

2-1. +44V supplied to collector of TR05 on F-1495
- 1) Center voltage +21V not supplied — 16. Defective TR01 on F-1495

2-2. +44V not supplied to collector of TR05 on F-1495
- 17. F01 on F-1495 opens
- 18. Defective power supply section (F-1496)

3. AUX input inoperative (on 2-CH of FUNCTION switch)

3-1. Both channels inoperative — 19. Defective power supply section (F-1496)

3-2. One channel inoperative
- 20. Defective TR01 on F-1495
- 21. Defective VOLUME VR01 (VR02) on F-1496
- 22. Defective BALANCE volume VR05 (VR-06) on F-1496
- 23. Defective BASS volume VR09 (VR10) on F-1496
- 24. Defective TREBLE volume VR13 (VR14) on F-1496
- 25. Imperfect contact of FUNCTION switch S01 on F-1492
- 26. Imperfect contact of TAPE MONITOR switch S01 on F-1493
- 27. Imperfect contact of SELECTOR switch S701
- 28. Imperfect contact of LOUDNESS switch S02 on F-1492

www.hifiengine.com

Symptom	Check Point	Cause & What to Do

4. PHONO inoperative

4-1. Both channels inoperative — 29. Defective power supply section (F-1496)

4-2. One channel inoperative
- 1) Reverse the output cords of L and R-ch from turntable
  - 1-1) Inoperative channel reverses
    - 30. Imperfect contact of the output cord
    - 31. Defective turntable
  - 1-2) Inoperative channel not reverses
    - 32. Defective TR01, TR03 (TR02, TR04) on F-1493
    - 33. Imperfect contact of SELECTOR switch S701a (S701b)

5-3. QS SYNTHESIZER or QS REGULAR MATRIX of FUNCTION Switch inoperative (2-CH of FUNCTION switch inoperative)

1. Both Front L, R and Rear L, R inoperative

1-1. +25V not supplied to collector of TR603 on F-1492
- 34. F01 on F-1492 opens
- 35. Defective Power Supply Section (F-1496)

1-2. +25V not supplied to emitter of TR603 on F-1492
- 36. Defective TR603 on F-1492
- 37. Defective ZD01 on F-1492

2. One Front L (R) or Rear L (R) inoperative
- 38. Defective TR01 or TR03 (TR02 or TR04) on F-1492
- 39. Defective TR15, TR17 or TR19 (TR16, TR18 or TR20) on F-1492
- 40. Defective TR601 on F-1492
- 41. Defective D11, D13, D15 or D17 (D12, D14, D16 or D18) on F-1492
- 42. Defective FET01 (FET02) on F-1492
- 43. Defective TR13 (TR14) on F-1492
- 44. Defective TR05 or TR09 (TR06 or TR10) on F-1492
- 45. Defective TR07 or TR11 (TR08 or TR12) on F-1492
- 46. Imperfect contact of FUNCTION switch S01

5-4. Troubleshooting on Tuner Section

1. Both FM and AM inoperative (PHONO operative)

1-1. Both channels inoperative
- 1) +15V not supplied to terminal [C], [E] and +25V not supplied to terminal [F] on F-1498 — 1. Defective F-1492 or F-1497
- 2) +15V not supplied to terminal [C], [E] on F-1498 — 2. Imperfect contact of SELECTOR switch S701c

1-2. One channel inoperative
- 1) AM section inoperative — 3. Imperfect contact of SELECTOR switch S701a (S701b)
- 2) FM section inoperative
  - 4. Defective TR12 (TR13) on F-1498
  - 5. Defective Low Pass Filter, LPF01 on F-1498
  - 6. Defective LC01 on F-1498
  - 7. Imperfect connect of SELECTOR switch S701a (S701b)

www.hifiengine.com

Symptom	Check Point	Cause & What to Do

2. FM Section

2-1. FM inoperative only
- 1) Tune FM signal or FM broadcasting station
  - 1-1) Signal meter inoperative
    - 8. Defective CF01 or CF02 on F-1498
    - 9. Defective FET01, TR01~TR05 on F-1498
    - 10. Defective L01~L06 on F-1498
  - 1-2) Signal meter operative (Interstation noise too low compared with proper unit)
    - 11. Defective IC01 on F-1498
    - 12. Defective L07 or L08 on F-1498
    - 13. Defective D01 or D02 on F-1498

2-2. Signal meter inoperative (FM broadcasting sound can be heard)
- 14. Defective TR06 on F-1498
- 15. Defective L10 on F-1498
- 16. Defective D03 or D04 on F-1498
- 17. Defective signal meter

2-3. No channel separation on FM stereo broadcasting
* Confirm that SELECTOR switch is set to FM AUTO
- 1) Indicator lamp not lighted
  - 18. Defective IC02 on F-1498
  - 19. Defective L16 on F-1498
  - 20. Defective TR11 on F-1498
  - 21. Defective VR01 for indicator lamp on F-1498
  - 22. Defective the indicator lamp, PL701
  - 23. F01 on F-1497 opens
- 2) Indicator lamp lighted
  - 24. Defective TR11 on F-1498
  - 25. VR01 out of adjustment on F-1498

3. AM Section

3-1. AM inoperative
- 1) Interstation noise changes by touching the terminal [D] on F-1498
  - 1-1) No change
  - 1-2) Increase
    - 26. Defective TR07, TR08 or TR10 on F-1498
    - 27. Defective L11, L14 or L15 on F-1498
    - 28. Defective D06 on F-1498
    - 29. Defective bar antenna, L701
    - 30. Defective TR09 on F-1498
    - 31. Defective L12 on F-1498
    - 32. Variable capacitor shorted

3-2. Distortion
- 33. Defective D05 or D06 on F-1498
- 34. IF out of adjustment on F-1498

3-3. Signal meter inoperative (AM broadcasting sound can be heard)
- 35. Defective D07 on F-1498
- 36. Defective signal meter

www.hifiengine.com

6. PARTS LOCATIONS AND PARTS LISTS

6-1. F-1493 Equalizer Circuit Board (Stock No. 7550550 Complete Circuit Board F-1493)

Conductor Side

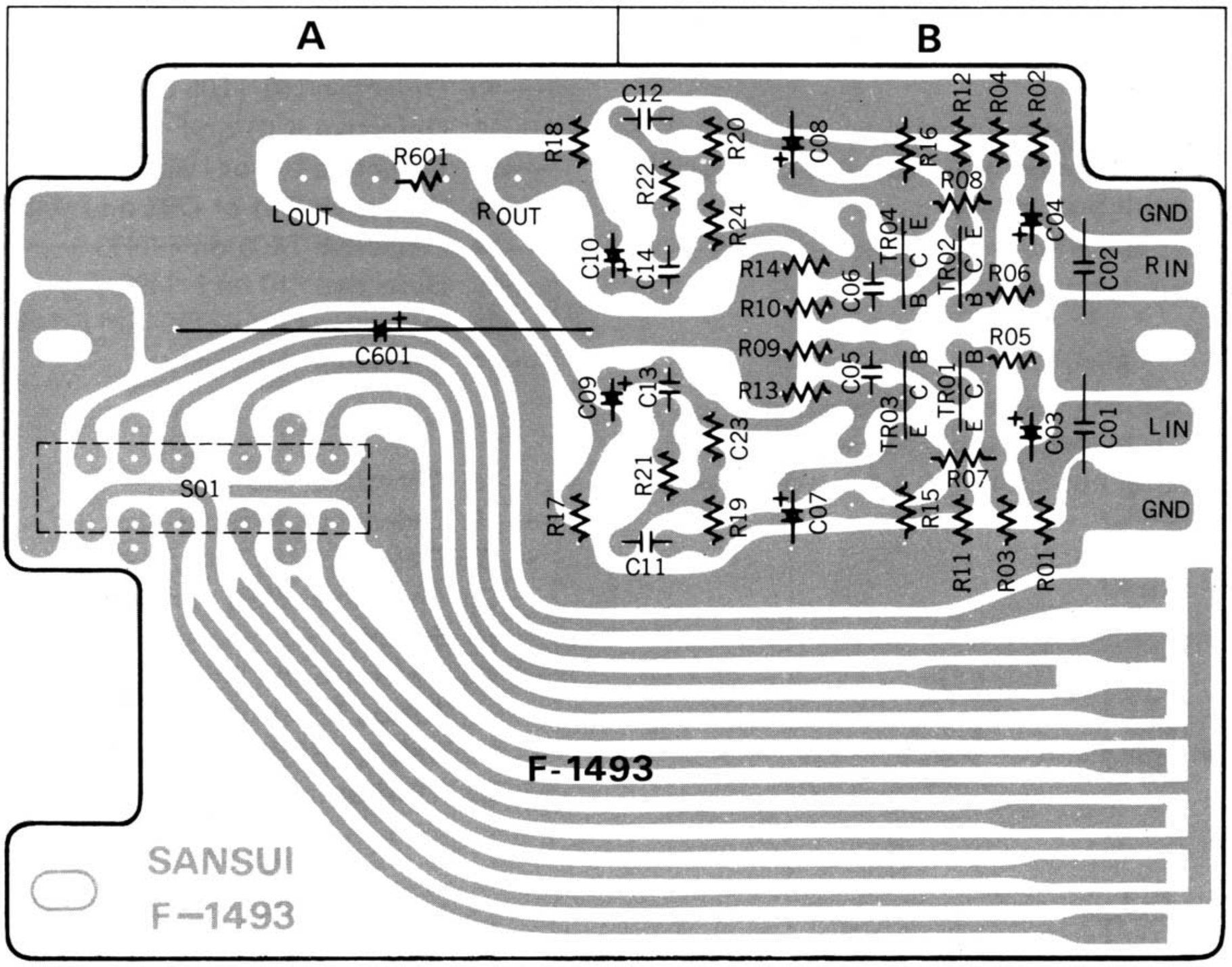

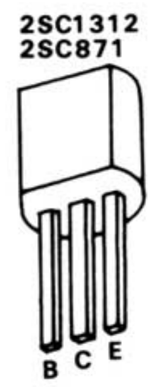

Parts List

Parts No.	Stock No.	Description		Position
TR01, 02	0306090 or 0305475	2SC1312 Ⓡ (F) or 2SC871 Ⓡ (F)	Transistor	B
TR03, 04	0306090 or 0305475	2SC1312 Ⓡ (F) or 2SC871 Ⓡ (F)	Transistor	B
C01, 02	0657473	0.047μF	50V C.C.	A, B
C03, 04	0573339	3.3μF	25V T.C.	B
C05, 06	0660680	68pF	50V C.C.	B
C07, 08	0511470	47μF	10V E.C.	B
C09, 10	0519103	0.47μF	50V E.C.	A
C11, 12	0601476	0.0047μF	50V M.C.	A, B
C13, 14	0601126	0.0012μF	50V M.C.	B
C601	0504221	220μF	35V E.C.	A
R01, 02	0106563	56kΩ	¼W C.R. (E.L.R.)	B
R03, 04	0106224	220kΩ	¼W C.R. (E.L.R.)	B
R05, 06	0106332	3.3kΩ	¼W C.R. (E.L.R.)	B
R07, 08	0106824	820kΩ	¼W C.R. (E.L.R.)	B
R09, 10	0106104	100kΩ	¼W C.R. (E.L.R.)	B
R11, 12	0106122	1.2kΩ	¼W C.R. (E.L.R.)	B
R13, 14	0106822	8.2kΩ	¼W C.R. (E.L.R.)	B
R15, 16	0106272	2.7kΩ	¼W C.R. (E.L.R.)	B
R17, 18	0106104	100kΩ	¼W C.R. (E.L.R.)	A
R19, 20	0106824	820kΩ	¼W C.R. (E.L.R.)	B
R21, 22	0106272	2.7kΩ	¼W C.R. (E.L.R.)	B
R23, 24	0106563	56kΩ	¼W C.R. (E.L.R.)	B
R601	0106561	560Ω	¼W C.R. (E.L.R.)	A
S01 (a~d)	1110250	Push Switch		A

Abbreviations

C.R.	Carbon Resistor	BP.E.C.	Bi-Polar Electrolytic Capacitor
S.R.	Solid Resistor	C.C.	Ceramic Capacitor
Ce.R.	Cement Resistor	Mi.C.	Mica Capacitor
M.R.	Metallized Film Resistor	O.C.	Oil Capacitor
M.C.	Mylar Capacitor	P.C.	Polystyrene Capacitor
E.C.	Electrolytic Capacitor	T.C.	Tantalum Capacitor

6-2. F-1496 Tone Control & Power Supply Circuit Board

Conductor Side

(Stock No. 7570830 Complete Circuit Board F-1496)

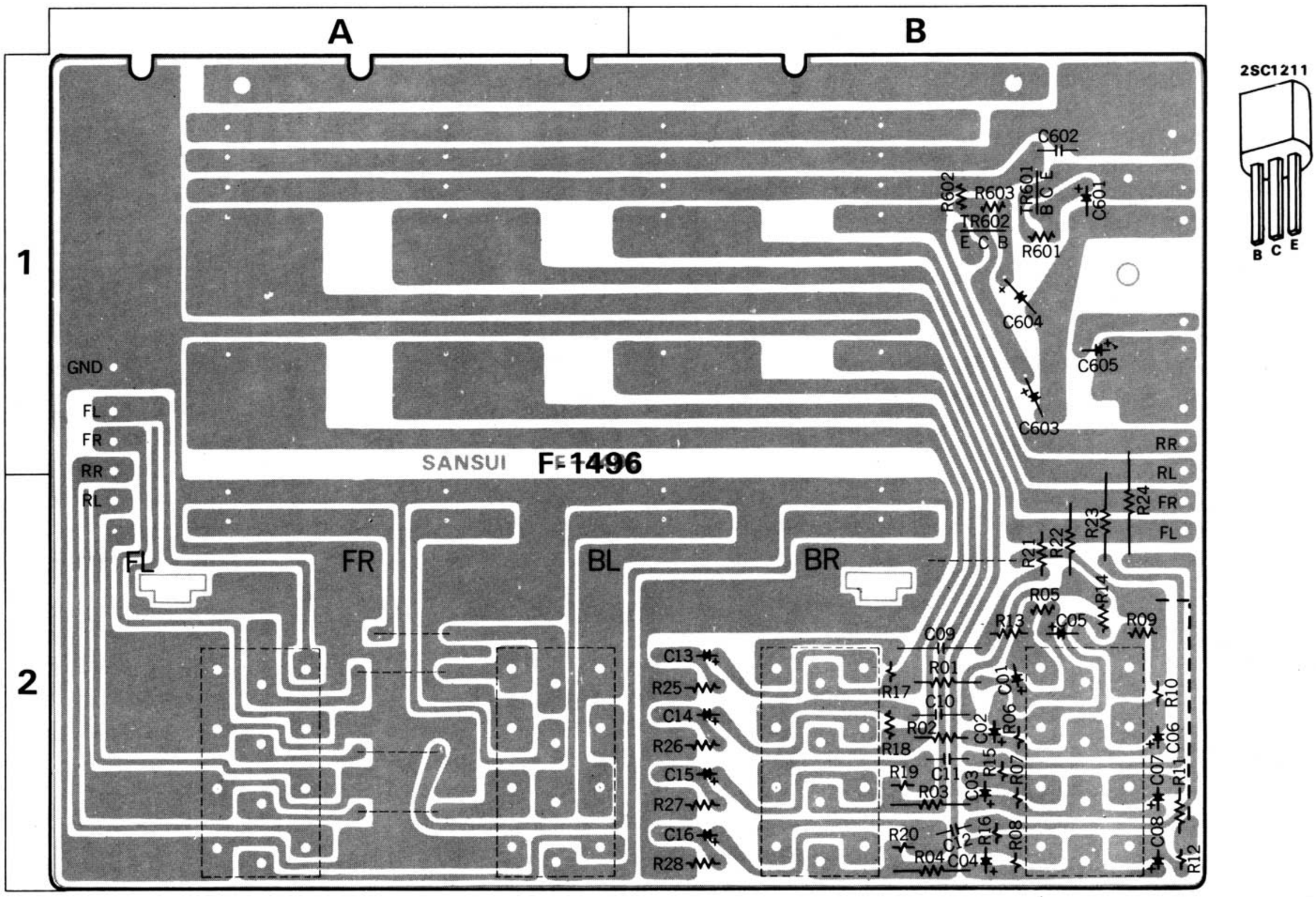

Parts List

Parts No.	Stock No.	Description		Position
TR601	0305930, 1	2SC1211 (C, D)	Transistor	1 B
TR602	0305930, 1	2SC1211 (C, D)		1 B
C01,02	0573158	0.15μF	25V T.C.	2 B
C03,04	0573158	0.15μF		2 B
C05,06	0519104	1.5μF	50V E.C.	2 B
C07,08	0519104	1.5μF		2 B
C09,10	0601337	0.033μF	50V M.C.	2 B
C11,12	0601337	0.033μF		2 B
C13,14	0573338	0.33μF	25V T.C.	2 B
C15,16	0573338	0.33μF		2 B
C601	0515101	100μF	50V E.C.	1 B
C602	0657473	0.047μF	50V C.C.	1 B
C603	0515331	330μF	50V E.C.	1 B
C604	0515331	330μF		1 B
R01,02	0107561	560Ω	¼W C.R.	2 B
R03,04	0107561	560Ω		2 B
R05,06	0106123	12kΩ	¼W C.R. (E.L.R.)	2 B
R07,08	0106123	12kΩ		2 B
R09,10	0106151	150Ω		2 B
R11,12	0106151	150Ω		2 B
R13,14	0106561	560Ω		2 B
R15,16	0106561	560Ω		2 B

Parts No.	Stock No.	Description		Position
R17,18	0106153	15kΩ	¼W C.R. (E.L.R.)	2 B
R19,20	0106153	15kΩ		2 B
R21	0106152	1.5kΩ		2 B
R22	0107152	1.5kΩ	¼W C.R.	2 B
R23,24	0107152	1.5kΩ		2B. 1, 2B
R25,26	0106560	56Ω		2 B
R27,28	0106560	56Ω		2 B
R601	0106682	6.8kΩ	¼W C.R. (E.L.R.)	1 B
R602	0106681	680Ω		1 B
R603	0106123	12kΩ		1 B
VR01~04	1060290, 1	250kΩ (B)×4 VOLUME		
VR05~08	1060300, 1	250kΩ (MN)×4 BALANCE Volume		
VR09~12	1060310, 1	5kΩ (C)×4 BASS Volume		
VR13~16	1060310, 1	5kΩ (C)×4 TREBLE Volume		
	2410570	5P Connector		

www.hifiengine.com

6-3. F-1498A Tuner Circuit Board (Stock No. 7520750 Complete Circuit Board F-1498A)

Parts List

Parts No.	Stock No.	Description	Position
TR01	0305801, 2	2SC1047 (B, C) Transistor	1 A
TR02	0305791, 2	2SC930 (D, E) Transistor	1 A
TR03	0305790	2SC930 (C) Transistor	1 A
TR04	0306112, 3	2SC738 (C, D) Transistor	1 B
TR05	0306112, 3	2SC738 (C, D) Transistor	1 B
TR06	0305942, 3	2SC710 (C, D) Transistor	2 B
TR07	0305992	2SC403C (4) Transistor	1. 2 B
TR08	0305992	2SC403C (4) Transistor	1, 2 B
TR09	0305991	2SC403C (3) Transistor	2 B
TR10	0305991	2SC403C (3) Transistor	1, 2 C
TR11	0300291, 2	2SA678A (6, 7) Transistor	2 D
TR12	0305475 or 0306090	2SC871 Ⓡ (F) or 2SC1312 Ⓡ (F) Transistor	2 D
IC01	0360060	TA7061AP IC	1 C
IC02	0360080	HA1120 IC	1 D
FET01	0370080, 1	3SK39 (Q, R) FET	1 A
D01	0311060	1N60P Diode	1 C
D02	0311060	1N60P Diode	1 C
D03	0310400	1N34A Diode	2 C
D04	0310400	1N34A Diode	2 C
D05	0310400	1N34A Diode	2 B
D06	0310400	1N34A Diode	1, 2 C
D07	0310400	1N34A Diode	1, 2 C
D08	0340090	DS430 Diode	1 C
ZD01	0315090	EQB01-13 Zener Diode	2 C
CF01	0910150	SFE-10.7MA-M Ceramic Filter	1 B
CF02	0910150	SFE-10.7MA-M Ceramic Filter	1 B
L01	4200570	FM ANT Coil	1 A
L02	4210200	FM RF Coil	1 A
L03	4290110	Choke Coil	1 A
L04	4220400	FM OSC Coil	1 A
L05	4235890	10.7MHz (WHITE) FM IF Coil	1 A
L06	4235900	10.7MHz (BLACK) FM IF Coil	1 A, B
L07	4235750	10.7MHz (PINK) FM Discriminator Coil	1 C
L08	4235760	10.7MHz (BLUE) FM Discriminator Coil	1 C
L09	4290011	3.5μF Peaking Coil	1, 2 C
L10	4235770	10.7MHz (GREEN) FM Meter Coil	2 B, C
L11	0910180	YEL-455E2 (CFW-555B) Ceramic Filter	1, 2 C
L12	4220380	AM OSC Coil	2 B
L13	4290011	3.5μH Peaking Coil	2 A
L14	4230500	455kHz (BLUE) AM IF Coil	1, 2B, C
L15	4230610	455kHz (BLACK) AM IF Coil	1, 2 C
L16	4240720	19kHz Coil	1 D
LC01	4240710	MPX Coil	1 D
LPF01	0910220	Low Pass Filter	2 D
TC03	1230090	ECV-1ZW06P Ceramic Trimmer	1 A, B
VC01~05	1220150	Variable Capacitor	
C01	0669347	12pF 50V C.C.	2 A
C02	0656102	0.001μF 25V C.C.	1 A
C03	0656223	0.022μF 25V C.C.	1 A
C04	0656223	0.022μF 25V C.C.	1 A
C05	0656223	0.022μF 25V C.C.	1 A

Parts No.	Stock No.	Description	Position
C06	0669209	8.2pF 50V C.C.	1 A
C07	0669353	18pF 50V C.C.	2 A
C08	0669347	12pF 50V C.C.	1 A
C09	0660221	220pF 50V C.C.	1 A
C10	0669353	18pF 50V C.C.	1 A
C11	0656223	0.022μF 25V C.C.	1 A
C12	0656223	0.022μF 25V C.C.	1 A
C13	0669203	2.7pF 50V C.C.	1 A
C14	0669370	10pF 50V C.C.	1 A
C15	0669353	18pF 50V C.C.	2 A
C16	0669370	10pF 50V C.C.	1 A, B
C17	0656223	0.022μF 25V C.C.	1 A
C18	0656223	0.022μF 25V C.C.	1 A
C19	0656223	0.022μF 25V C.C.	1 A
C20	0669320	10pF 50V C.C.	1 B
C21	0656223	0.022μF 25V C.C.	1 B
C22	0656223	0.022μF 25V C.C.	1 B
C23	0656223	0.022μF 25V C.C.	1 B
C24	0656223	0.022μF 25V C.C.	
C25	0656223	0.022μF 25V C.C.	1 B
C26	0656223	0.022μF 25V C.C.	1 B, C
C27	0512101	100μF 16V E.C.	1 D
C28	0656223	0.022μF 25V C.C.	2 B
C29	0656223	0.022μF 25V C.C.	1 C
C30	0656223	0.022μF 25V C.C.	1 C
C31	0656223	0.022μF 25V C.C.	1 C
C32	0656223	0.022μF 25V C.C.	1 C
C33	0656223	0.022μF 25V C.C.	1 C
C34	0656223	0.022μF 25V C.C.	2 B
C35	0656223	0.022μF 25V C.C.	2 B
C36	0656223	0.022μF 25V C.C.	2 C
C37	0656223	0.022μF 25V C.C.	2 C
C38	0512100	10μF 16V E.C.	1 C
C39	0660221	220pF 50V C.C.	1 C
C40	0660221	220pF 50V C.C.	1 C
C41	0660331	330pF 50V C.C.	1 C
C42	0656223	0.022μF 25V C.C.	2 B
C43	0615339	3.3μF 50V E.C.	2 B
C44	0656473	0.047μF 25V C.C.	2 B
C45	0601107	0.01μF 50V M.C.	2 B
C46	0656473	0.047μF 25V C.C.	2 B
C47	0656473	0.047μF 25V C.C.	2 B
C48	0660100	10pF 50V C.C.	2 B
C49	0601107	0.01μF 50V M.C.	2 B
C50	0512100	10μF 16V E.C.	2 B
C51	0656473	0.047μF 25V C.C.	2 B
C52	0620361	360pF 50V P.C.	2 B
C53	0660150	15pF 50V C.C.	2 B
C54	0656473	0.047μF 25V C.C.	1 B
C55	0656473	0.047μF 25V C.C.	2 B
C56	0656473	0.047μF 25V C.C.	2 B
C57	0656473	0.047μF 25V C.C.	1 B, C
C58	0656473	0.047μF 25V C.C.	2 C
C59	0512479	4.7μF 16V E.C.	2 B
C60	0656473	0.047μF 25V C.C.	2 C
C61	0512479	4.7μF 16V E.C.	2 C
C62	0656473	0.047μF 25V C.C.	2 C
C63	0656473	0.047μF 25V C.C.	2 C
C64	0601477	0.047μF 50V M.C.	2 C
C65	0656472	0.0047μF 25V C.C.	2 C
C66	0656223	0.022μF 25V C.C.	2 C

www.hifiengine.com

Conductor Side

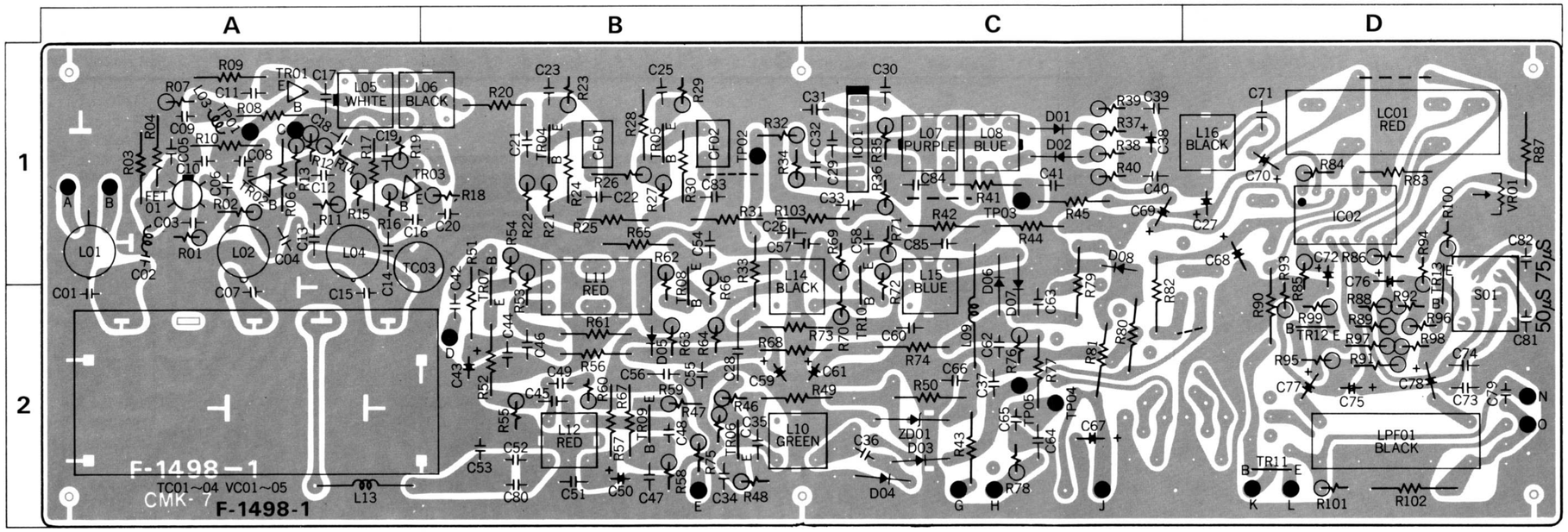

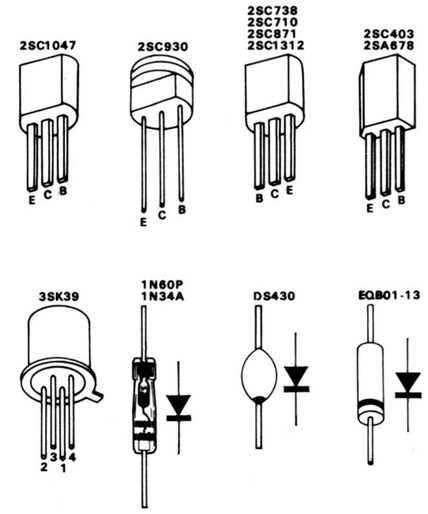

Conductor Side

Parts No.	Stock No.	Description	Position
C67	0510101	100μF 6.3V E.C.	2 C
C68	0519101	1μF 50V E.C.	1 D
C69	0515109	1μF 50V E.C.	1 C
C70	0515339	3.3μF 50V E.C.	1 D
C71	0629001	6800pF 50V P.C.	1 D
C72	0512100	10μF 16V E.C.	1 D
C73	0601187	0.018μF 50V M.C.	2 D
C74	0601187	0.018μF 50V M.C.	2 D
C75	0515109	1μF 50V E.C.	2 D
C76	0515109	1μF 50V E.C.	1 D
C77	0515109	1μF 50V E.C.	2 D
C78	0515109	1μF 50V E.C.	2 D
C79	0601126	0.0012μF 50V M.C.	2 D
C80	0660150	15pF 50V C.C.	2 D
C81	0601826	0.0082μF 50V M.C.	2 D
C82	0601826	0.0082μF 50V M.C.	1 D
C83	0656223	0.022μF 25V C.C.	1 B
C84	0656223	0.022μF 25V C.C.	1 C
C85	0656223	0.022μF 25V C.C.	1 C
R01	0106124	120kΩ ¼W C.R. (E.L.R.)	1 A
R02	0106224	220kΩ ¼W C.R. (E.L.R.)	1 A
R03	0107124	120kΩ ¼W C.R.	1 A
R04	0107101	100Ω ¼W C.R.	1 A
R06	0107221	220Ω ¼W C.R.	1 A
R07	0106562	5.6kΩ ¼W C.R. (E.L.R.)	1 A
R08	0107123	12kΩ ¼W C.R.	1 A
R09	0107392	3.9kΩ ¼W C.R.	1 A
R10	0107221	220Ω ¼W C.R.	1 A
R11	0106682	6.8kΩ ¼W C.R. (E.L.R.)	1 A
R12	0106121	120Ω ¼W C.R. (E.L.R.)	1 A
R13	0106473	47kΩ ¼W C.R. (E.L.R.)	1 A
R14	0106102	1kΩ ¼W C.R. (E.L.R.)	1 A

Parts No.	Stock No.	Description	Position
R15	0106152	1.5kΩ ¼W C.R. (E.L.R.)	1 A
R16	0106390	39Ω ¼W C.R. (E.L.R.)	1 A
R17	0107222	2.2kΩ ¼W C.R.	1 A
R18	0106102	1kΩ ¼W C.R. (E.L.R.)	1 B
R19	0106471	470Ω ¼W C.R. (E.L.R.)	1 A
R20	0107221	220Ω ¼W C.R.	1 B
R21	0106332	3.3kΩ ¼W C.R. (E.L.R.)	1 B
R22	0106152	1.5kΩ ¼W C.R. (E.L.R.)	1 B
R23	0106102	1kΩ ¼W C.R. (E.L.R.)	1 B
R24	0107561	560Ω ¼W C.R.	1 B
R25	0107220	22Ω ¼W C.R.	1 B
R26	0106101	100Ω ¼W C.R. (E.L.R.)	1 B
R27	0106332	3.3kΩ ¼W C.R. (E.L.R.)	1 B
R28	0107152	1.5kΩ ¼W C.R.	1 B
R29	0106102	1kΩ ¼W C.R. (E.L.R.)	1 B
R30	0107102	1kΩ ¼W C.R.	1 B
R31	0107220	22Ω ¼W C.R.	1 B
R32	0106391	390Ω ¼W C.R. (E.L.R.)	1 B
R33	0107121	120Ω ¼W C.R.	1, 2 B
R34	0106271	270Ω ¼W C.R. (E.L.R.)	1 B
R35	0106562	5.6kΩ ¼W C.R. (E.L.R.)	1 C
R36	0106221	220Ω ¼W C.R. (E.L.R.)	1 C
R37	0106102	1kΩ ¼W C.R. (E.L.R.)	1 C
R38	0106102	1kΩ ¼W C.R. (E.L.R.)	1 C
R39	0106682	6.8kΩ ¼W C.R. (E.L.R.)	1 C
R40	0106682	6.8kΩ ¼W C.R. (E.L.R.)	1 C
R41	0107101	100Ω ¼W C.R.	1 C
R42	0107101	100Ω ¼W C.R.	1 C
R43	0172121	120Ω 2 W M.R.	2 C
R44	0107479	4.7Ω ¼W C.R.	1 C
R45	0107102	1kΩ ¼W C.R.	1 C
R46	0106153	15kΩ ¼W C.R. (E.L.R)	2 B

Parts No.	Stock No.	Description	Position
R47	0106472	4.7kΩ ¼W C.R. (E.L.R.)	2 B
R48	0106102	1kΩ ¼W C.R. (E.L.R.)	2 B
R50	0107101	100Ω ¼W C.R.	2 C
R51	0107103	10kΩ ¼W C.R.	1, 2 B
R52	0107220	22Ω ¼W C.R.	2 B
R53	0106334	330kΩ ¼W C.R. (E.L.R.)	1, 2 B
R54	0106561	560Ω ¼W C.R. (E.L.R.)	1 B
R55	0106102	1kΩ ¼W C.R. (E.L.R.)	2 B
R56	0107123	12kΩ ¼W C.R.	2 B
R57	0107223	22kΩ ¼W C.R.	2 B
R58	0106472	47kΩ ¼W C.R. (E.L.R.)	2 B
R59	0106102	1kΩ ¼W C.R. (E.L.R.)	2 B
R60	0106100	10Ω ¼W C.R. (E.L.R.)	2 B
R61	0107221	220Ω ¼W C.R.	2 B
R62	0106391	390Ω ¼W C.R. (E.L.R.)	1, 2 B
R63	0106103	10kΩ ¼W C.R. (E.L.R.)	2 B
R64	0106104	100kΩ ¼W C.R. (E.L.R.)	2 B
R65	0107102	1kΩ ¼W C.R.	1 B
R66	0106681	680Ω ¼W C.R. (E.L.R.)	1, 2 B
R67	0107122	1.2kΩ ¼W C.R.	2 B
R68	0107822	8.2kΩ ¼W C.R.	2 B, C
R69	0106472	47kΩ ¼W C.R. (E.L.R.)	1 C
R70	0106153	15kΩ ¼W C.R. (E.L.R.)	2 C
R71	0106561	560Ω ¼W C.R. (E.L.R.)	1 C
R72	0106471	470Ω ¼W C.R. (E.L.R.)	1, 2 C
R73	0107221	220Ω ¼W C.R.	2 B, C
R74	0107103	10kΩ ¼W C.R.	2 C
R75	0106221	220Ω ¼W C.R. (E.L.R.)	2 B
R76	0106103	10kΩ ¼W C.R. (E.L.R.)	2 C
R77	0107102	1kΩ ¼W C.R.	2 C
R78	0106473	47kΩ ¼W C.R. (E.L.R.)	2 C
R79	0107562	5.6kΩ ¼W C.R.	1, 2 C

Parts No.	Stock No.	Description	Position
R80	0107682	6.8kΩ ¼W C.R.	2 C
R81	0107182	1.8kΩ ¼W C.R.	2 C
R82	0107473	47kΩ ¼W C.R.	1, 2 C
R83	0107473	47kΩ ¼W C.R.	1 D
R84	0106151	150Ω ¼W C.R. (E.L.R.)	1 D
R85	0106472	4.7kΩ ¼W C.R. (E.L.R.)	1, 2 D
R86	0106151	150Ω ¼W C.R. (E.L.R.)	1 D
R88	0106332	3.3kΩ ¼W C.R. (E.L.R.)	2 D
R89	0106332	3.3kΩ ¼W C.R. (E.L.R.)	2 D
R90	0107392	3.9kΩ ¼W C.R.	1, 2 D
R91	0106184	180kΩ ¼W C.R.	2 D
R92	0106184	189kΩ ¼W C.R.	2 D
R93	0106273	27kΩ ¼W C.R.	1, 2 D
R94	0106273	27kΩ ¼W C.R.	1, 2 D
R95	0106332	3.3kΩ ¼W C.R.	2 D
R96	0106332	3.3kΩ ¼W C.R.	2 D
R97	0106332	3.3kΩ ¼W C.R.	2 D
R98	0106332	3.3kΩ ¼W C.R.	2 D
R99	0106391	390Ω ¼W C.R.	2 D
R100	0106391	390Ω ¼W C.R.	1 D
R101	0107332	3.3kΩ ¼W C.R.	2 D
R102	0107332	3.3kΩ ¼W C.R. (E.L.R.)	2 D
R103	0107220	22Ω ¼W C.R.	1 B, C

Abbreviations

C.R.	Carbon Resistor	**BP.E.C.**	Bi-Polar Electrolytic Capacitor
S.R.	Solid Resistor	**C.C.**	Ceramic Capacitor
Ce.R.	Cement Resistor	**Mi.C.**	Mica Capacitor
M.R.	Metallized Film Resistor	**O.C.**	Oil Capacitor
M.C.	Mylar Capacitor	**P.C.**	Polystyrene Capacitor
E.C.	Electrolytic Capacitor	**T.C.**	Tantalum Capacitor

6-4. F-1492 Vario-Matrix Circuit Board (Stock No. 7650170 Complete Circuit Board F-1492)

Conductor Side

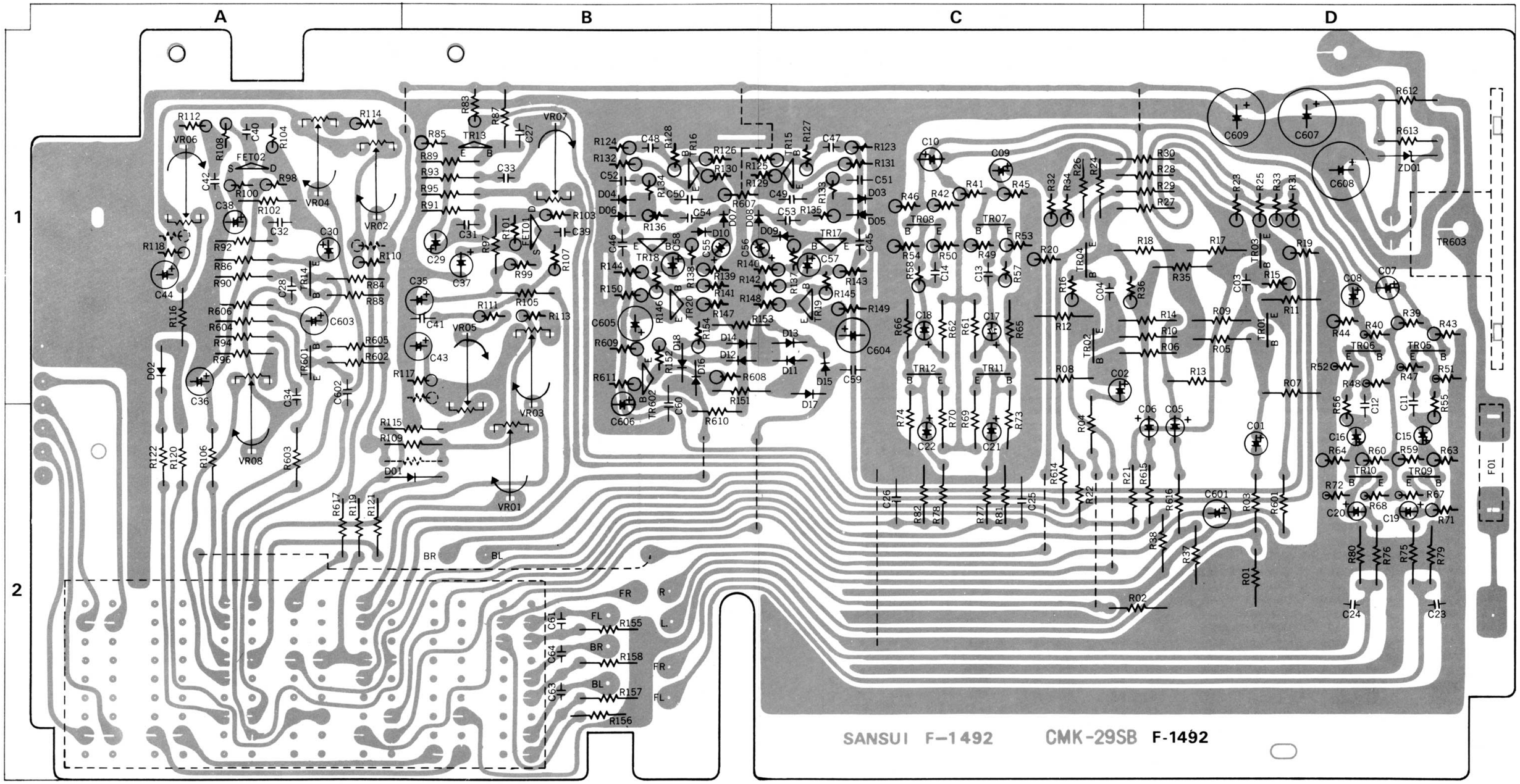

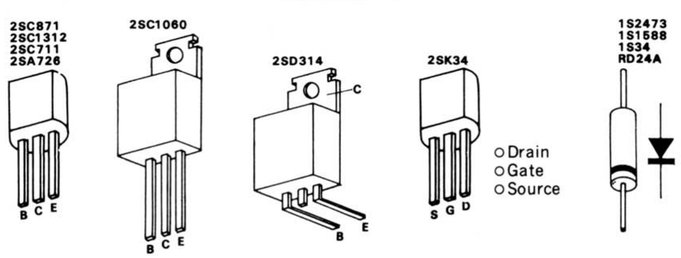

Abbreviations

C.R.	: Carbon Resistor	BP.E.C.	: Bi-Polar Electrolytic Capacitor
S.R.	: Solid Resistor	C.C.	: Ceramic Capacitor
Ce.R.	: Cement Resistor	Mi.C.	: Mica Capacitor
M.R.	: Metallized Film Resistor	O.C.	: Oil Capacitor
M.C.	: Mylar Capacitor	P.C.	: Polystyrene Capacitor
E.C.	: Electrolytic Capacitor	T.C.	: Tantalum Capacitor

Parts List

Parts No.	Stock No.	Description		Position
TR01, 02	0305475 or 0306090	2SC 871® (F) or 2SC1312® (F)	Transistor	1D.1C
TR03, 04	0305475 or 0306090	2SC 871® (F) or 2SC1312® (F)	Transistor	1D.1C
TR05	0300410	2SA 726® (F)	Transistor	1D
TR06, 07	0305475 or 0306090	2SC 871® (F) or 2SC1312® (F)	Transistor	1D.1C
TR08	0300410	2SA 726® (F)	Transistor	1C
TR09, 10	0300410	2SA 726® (F)	Transistor	2D
TR11, 12	0300410	2SA 726® (F)	Transistor	1C
TR13, 14	0305475 or 0306090	2SC 871® (F) or 2SC1312® (F)	Transistor	1B.1A
TR15, 16	0305731	2SC 711 (F)	Transistor	1C.1B
TR17, 18	0305731	2SC 711 (F)	Transistor	1C.1B
TR19, 20	0305732	2SC 711 (F)	Transistor	1C.1B
TR601	0305475 or 0306090	2SC 871® (F) or 2SC1312® (F)	Transistor	1A
TR602	0305732	2SC 711 (F)	Transistor	1B
TR603	0305711, 2 or 0308412, 3	2SC1060 (B, C) or 2SD 314 (D, E)	Transistor	1D
FET01, 02	0370140, 1	2SK34 (D, E)	FET	
D01, 02	0311160 or 0311180	1S2473 or 1S1588	Diode	2AB.1A
D03, 04	0311190	1S34	Diode	1C.1B
D05, 06	0311190	1S34	Diode	1C.1B
D07, 08	0311160 or 0311180	1S2473 or 1S1588	Diode	1B
D09, 10	0311160 or 0311180	1S2473 or 1S1588	Diode	1C.1B
D11, 12	0311160 or 0311180	1S2473 or 1S1588	Diode	1C.1B
D13, 14	0311160 or 0311180	1S2473 or 1S1588	Diode	1C.1B
D15, 16	0311160 or 0311180	1S2473 or 1S1588	Diode	1C.1B
D17, 18	0311160 or 0311180	1S2473 or 1S1588	Diode	1C.1B
ZD01	0315420	RD24A (N)	Zener Diode	1D
C01, 02	0519103	0.47μF	50V E.C.	2D.1C
C03, 04	0601107	0.01μF	50V M.C.	1D.1C
C05, 06	0573108	0.1μF	25V T.C.	2D.2DC
C07, 08	0515109	1μF	50V E.C.	1D
C09, 10	0515109	1μF	50V E.C.	1C
C11, 12	0601607	0.06μF	50V M.C.	1, 2D
C13, 14	0601126	0.0012μF	50V M.C.	1C
C15, 16	0519103	0.47μF	50V E.C.	2D
C17, 18	0519103	0.47μF	50V E.C.	1C

Parts No.	Stock No.	Description		Position
C19, 20	0519103	0.47μF	50V E.C.	2D
C21, 22	0519103	0.47μF	50V E.C.	2C
C23, 24	0601106	0.001μF	50V M.C.	2D
C25, 26	0601106	0.001μF	50V M.C.	2C
C27, 28	0601477	0.047μF	50V M.C.	1B.1A
C29, 30	0513479	4.7μF	25V E.C.	1B.1A
C31, 32	0601397	0.039μF	50V M.C.	1B.1A
C33, 34	0620681	680pF	50V P.C.	1B.1,2A
C35, 36	0513100	10μF	25V E.C.	1B.1A
C37, 38	0513479	4.7μF	25V E.C.	1B.1A
C39, 40	0601226	0.0022μF	50V M.C.	1B.1A
C41	0601397	0.039μF	50V M.C.	1B
C42	0601186	0.0018μF	50V M.C.	1A
C43, 44	0513100	10μF	25V E.C.	1B.1A
C45, 46	0601106	0.001μF	50V M.C.	1C.1B
C47, 48	0601206	0.002μF	50V M.C.	1C.1B
C49, 50	0601477	0.047μF	50V M.C.	1C.1B
C51, 52	0601206	0.002μF	50V M.C.	1C.1B
C53, 54	0601477	0.047μF	50V M.C.	1C.1B
C55, 56	0573228	0.22μF	25V T.C.	1B
C57, 58	0513479	4.7μF	25V E.C.	1C.1B
C59, 60	0601477	0.047μF	50V M.C.	1C. 1,2B
C61, 62	0601227	0.022μF	50V M.C.	2B
C63, 64	0601227	0.022μF	50V M.C.	2B
C65, 66	0620181	180pF	50V P.C.	
C67, 68	0620181	180pF	50V P.C.	
C601	0513100	10μF	25V E.C.	2D
C602	0601476	0.0047μF	50V M.C.	1, 2A
C603	0519102	3.3μF	50V E.C.	1A
C604	0510101	100μF	6.3V E.C.	1C
C605	0510101	100μF	6.3V E.C.	1B
C606	0513479	4.7μF	25V E.C.	1, 2B
C607	0515101	100μF	50V E.C.	1D
C608	0513221	220μF	25V E.C.	1D
C609	0513221	220μF	25V E.C.	1D
R01, 02	0107104	100kΩ	¼W C.R.	2D.2CD
R03, 04	0107222	2.2kΩ	¼W C.R.	2D.1,2C
R05, 06	0107224	220kΩ	¼W C.R.	1D.1CD
R07, 08	0107104	100kΩ	¼W C.R.	1D.1C
R09, 10	0107222	2.2kΩ	¼W C.R.	1D.1CD
R11, 12	0107222	2.2kΩ	¼W C.R.	1D.1C
R13, 14	0107224	220kΩ	¼W C.R.	1D.1CD
R15, 16	0106223	22kΩ	¼W C.R. (E.L.R.)	1D.1C
R17, 18	0107152	1.5kΩ	¼W C.R.	1D.1CD
R19, 20	0106152	1.5kΩ	¼W C.R. (E.L.R.)	1D.1C
R21, 22	0107224	220kΩ	¼W C.R.	2C
R23	0106104	100kΩ	¼W C.R. (E.L.R.)	1D
R24	0107104	100kΩ	¼W C.R.	1C
R25	0106104	100kΩ	¼W C.R. (E.L.R.)	1D
R26	0107104	100kΩ	¼W C.R.	1C
R27, 28	0107104	100kΩ	¼W C.R.	1C, D
R29, 30	0107104	100kΩ	¼W C.R.	1C, D
R31, 32	0106563	56kΩ	¼W C.R. (E.L.R.)	1D.1C
R33, 34	0106563	56kΩ	¼W C.R. (E.L.R.)	1D.1C
R35	0107224	220kΩ	¼W C.R.	1D
R36	0106224	220kΩ	¼W C.R. (E.L.R.)	1C
R37, 38	0107474	470kΩ	¼W C.R.	2D

to be continued

www.hifiengine.com

F-1492 Parts List

Parts No.	Stock No.	Description		Position
R39	0106104	100kΩ		1 D
R40	0106224	220kΩ		1 D
R41	0106224	220kΩ		1 C
R42	0106104	100kΩ		1 C
R43	0106224	220kΩ		1 D
R44	0106104	100kΩ		1 D
R45	0106104	100kΩ		1 C
R46	0106224	220kΩ	¼W C.R. (E.L.R.)	1 D
R47, 48	0106682	6.8kΩ		1 D
R49, 50	0106682	6.8kΩ		1 C
R51, 52	0106682	6.8kΩ		1 D
R53, 54	0106682	6.8kΩ		1 C
R55, 56	0106223	22kΩ		1, 2 D
R57, 58	0106153	15kΩ		1 C
R59, 60	0106394	390kΩ		2 D
R61, 62	0107394	390kΩ	¼W C.R.	1 C
R63, 64	0106824	820kΩ	¼W C.R. (E.L.R.)	2 D
R65, 66	0107824	820kΩ	¼W C.R.	1 C
R67, 68	0106102	1kΩ	¼W C.R. (E.L.R.)	2 D
R69, 70	0107102	1kΩ	¼W C.R.	1, 2 C
R71, 72	0106272	2.7kΩ	¼W C.R. (E.L.R.)	2 D
R73, 74	0107272	2.7kΩ		1, 2 C
R75, 76	0107222	2.2kΩ		2 D
R77, 78	0107222	2.2kΩ	¼W C.R.	2 C
R79, 80	0107105	1MΩ		2 D
R81, 82	0107105	1MΩ		2 C
R83	0106472	4.7kΩ	¼W C.R. (E.L.R.)	2 B
R84	0107472	4.7kΩ	¼W C.R.	1 A
R85	0106222	2.2kΩ	¼W C.R. (E.L.R.)	2 B
R86	0107272	2.7kΩ		1 A
R87	0107184	180kΩ		2 B
R88	0107154	150kΩ		1 A
R89, 90	0107473	47kΩ	¼W C.R.	2 B . 1 A
R91, 92	0107151	150Ω		2 B . 1 A
R93, 94	0107153	15kΩ		2 B . 1 A
R95, 96	0107153	15kΩ		2 B . 1 A
R97	0107153	15kΩ		2 B
R98	0106153	15kΩ		1 A
R99, 100	0106123	12kΩ	¼W C.R. (E.L.R.)	2 B . 1 A
R101	0106333	33kΩ		2 B
R102	0107333	33kΩ	¼W C.R.	1 A
R103, 104	0106105	1MΩ	¼W C.R. (E.L.R.)	2 B . 1 A
R105, 106	0107103	10kΩ	¼W C.R.	2 B . 2 A
R107, 108	0106105	1MΩ	¼W C.R. (E.L.R.)	2 B . 1 A
R109	0107682	6.8kΩ	¼W C.R.	2 A , B
R110	0106682	6.8kΩ		1 A
R111, 112	0106334	330kΩ	¼W C.R. (E.L.R.)	2 B . 1 A
R113, 114	0106101	100Ω		2 B . 1 A
R115, 116	0107474	470kΩ	¼W C.R.	2AB. 1A
R117, 118	0106183	18kΩ	¼W C.R. (E.L.R.)	2 B . 1 A
R119, 120	0107224	220kΩ	¼W C.R.	2 A
R121, 122	0107564	560kΩ		2 A
R123, 124	0106683	68kΩ		1 C . 2 B
R125, 126	0106105	1MΩ	¼W C.R. (E.L.R.)	1BC. 2B
R127, 128	0106224	220kΩ		1 C . 2 B
R129, 130	0106223	22kΩ	¼W C.R. (E.L.R.)	1BC. 1B
R131, 132	0106103	10kΩ	¼W C.R. (E.L.R.)	1 C . 2 B
R133, 134	0106472	4.7kΩ		1 C . 2 B
R135, 136	0106472	4.7kΩ		1 C . 2 B
R137, 138	0110685	6.8MΩ	¼W S.R.	1 C . 1 B
R139, 140	0106333	33kΩ		1B. 1BC
R141	0106104	100kΩ		1 B
R142	0106224	220kΩ		1 B C
R143	0106153	15kΩ	¼W C.R. (E.L.R.)	1 C
R144	0106333	33kΩ		2 B
R145, 146	0106123	12kΩ		1 C . 2 B
R147, 148	0106472	4.7kΩ		1B. 1BC
R149, 150	0106102	1kΩ		1 C . 2 B
R151	0107104	100kΩ	¼W C.R.	1 B
R152	0106104	100kΩ	¼W C.R. (E.L.R.)	2 B
R153	0107104	100kΩ	¼W C.R.	1 B
R154	0106104	100kΩ	¼W C.R. (E.L.R.)	1 B
R155, 156	0107333	33kΩ		2 B
R157, 158	0107333	33kΩ		2 B
R601	0107822	8.2kΩ		2 D
R602	0107152	1.5kΩ	¼W C.R.	1 A
R603	0107472	4.7kΩ		2 A
R604	0107152	1.5kΩ		1 A
R605	0107224	220kΩ		1 A
R606	0107104	100kΩ		1 A
R607	0106105	1MΩ		1 B
R608	0106472	4.7kΩ	¼W C.R. (E.L.R.)	1 B
R609	0106102	1kΩ		2 B
R610	0107224	220kΩ	¼W C.R.	2 B
R611	0106333	33kΩ	¼W C.R. (E.L.R.)	2 B
R612	0107152	1.5kΩ		1 D
R613	0107152	1.5kΩ		1 D
R614	0107479	4.7Ω	¼W C.R.	2 C
R615	0107479	4.7Ω		2 D
R616	0107479	4.7Ω		2 D
R617	0107479	4.7Ω		2 A
VR01	1032490	20kΩ (B)	Semi-Variable Resistor	2 B
VR02	1032490	20kΩ (B)		1 A
VR03	1032490	20kΩ (B)		1, 2 B
VR04	1032490	20kΩ (B)		1 A
VR05	1032560	1MΩ (B)		1, 2 B
VR06	1032560	1MΩ (B)		1 A
VR07	1032520	100kΩ (B)		1 B
VR08	1032520	100kΩ (B)		1, 2 A
S01 (a~c)	1130800	Push Switch (7 Stage)		
	2410570	5P Connector		

Abbreviations

C.R.	Carbon Resistor	BP.E.C.	Bi-Polar Electrolytic Capacitor
S.R.	Solid Resistor	C.C.	Ceramic Capacitor
Ce.R.	Cement Resistor	Mi.C.	Mica Capacitor
M.R.	Metallized Film Resistor	O.C.	Oil Capacitor
M.C.	Mylar Capacitor	P.C.	Polystyrene Capacitor
E.C.	Electrolytic Capacitor	T.C	Tantalum Capacitor

6-5. F-1495 Driver Circuit Board (Stock No. 7570820 Complete Circuit Board F-1495)

Conductor Side

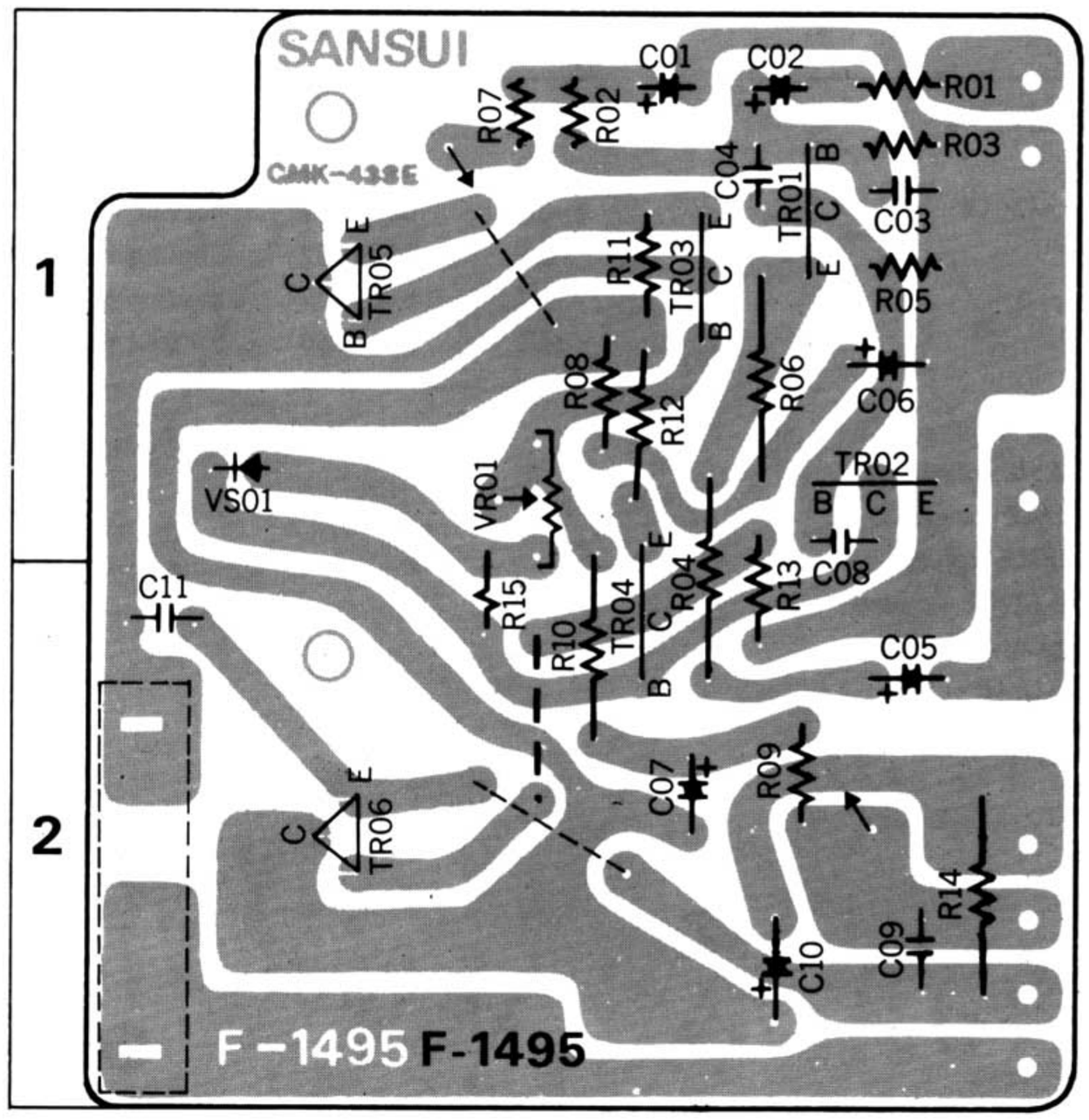

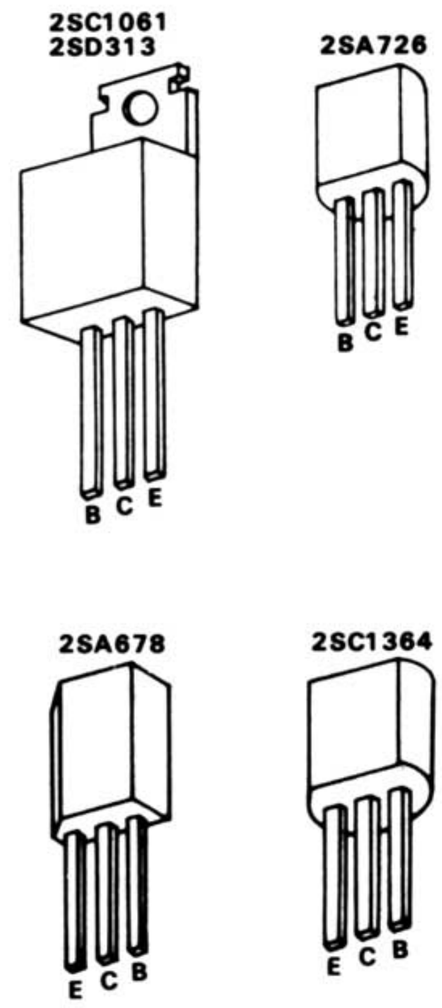

Parts List

Parts No.	Stock No.	Description		Position
TR01	0300410	2SA726® (F)	Transistor	1
TR02	0306131, 2	2SC1364 (6, 7)	Transistor	1
TR03	0306131, 2	2SC1364 (6, 7)	Transistor	1
TR04	0300291, 2	2SA678A (6, 7)	Transistor	1, 2
TR05,06	0305771, 2 or 0308391, 2	2SC1061 (B, C) or 2SD313 (D, E)	Transistor	1, 2
VS01	0340110	SV03F Varistor		1
C01	0515100	10μF	50V E.C.	1
C02	0519103	0.47μF	50V E.C.	1
C03	0660470	47 pF	50V C.C.	1
C04	0660470	47 pF	50V C.C.	1
C05	0513101	100μF	25V E.C.	2
C06	0512101	100μF	16V E.C.	1
C07	0515470	47μF	50V E.C.	2
C08	0660470	47 pF	50V C.C.	1
C09	0657223	0.022μF	50V C.C.	2
C10	0513471	470μF	25V E.C.	2
C11	0657223	0.022μF	50V C.C.	2
R01	0106103	10kΩ	¼W C.R. (E.L.R.)	1
R02	0106274	270Ω	¼W C.R. (E.L.R.)	1
R03	0106224	220kΩ	¼W C.R. (E.L.R.)	1
R04	0107221	220Ω	¼W C.R.	1, 2
R05	0106182	1.8kΩ	¼W C.R. (E.L.R.)	1
R06	0107181	180Ω	¼W C.R.	1
R07	0106683	68kΩ	¼W C.R. (E.L.R.)	1
R08	0106123	12kΩ	¼W C.R. (E.L.R.)	1
R09	0106102	1kΩ	¼W C.R. (E.L.R.)	2
R10	0107332	3.3kΩ	¼W C.R.	1, 2
R11	0106221	220Ω	¼W C.R. (E.L.R.)	1
R12	0106330	33Ω	¼W C.R. (E.L.R.)	1
R13	0106221	220Ω	¼W C.R. (E.L.R.)	1, 2
R14	0107471	470Ω	¼W C.R.	2
R15	0107102	1kΩ	¼W C.R.	1, 2
VR01	1031410, 1	200Ω (B) Semi-Variable Resistor		1
F01	0433610	2A 125V Quick Acting Fuse		
	0433660	1.5A 250V Quick Acting Fuse (CSA Model Only)		

6-6. Other Parts (Front Side)

Parts List

Parts No.	Stock No.	Description
1	5101165	Binding Head Screw, M4×14
2	5186110	Plain Washer, 4φ
3	5101165	Binding Head Screw, M×14
4	5186110	Plain Washer, 4φ
5	5726850	Wood Bonnet
6	5176052	Jack Nut
7	5176052	Jack Nut
8	5317760	WI-2 Type Knob, BASS volume
9	5317671	WO-1 Type Knob, BASS volume
10	5317760	WI-2 Type Knob, TREBLE volume
11	5317671	WO-I Type Knob, TREBLE volume
12	5317760	WI-2 Type Knob, BALANCE volume
13	5317671	WO-1 Type Knob, BALANCE volume
14	5317830	WI-3 Type Knob, VOLUME
15	5317840	WO-2 Type Knob, VOLUME
16	5326420	Push Button
17	5326420	Push Button
18	5326420	Push Button
19	5326420	Push Button
20	5326420	Push Button
21	5326420	Push Button
22	5326420	Push Button
23	5317730	M-3 Type Knob, SELECTOR
24	5317820	T-6 Type Knob, TUNING
25	5176011	A Type Nut
26	5102843	Flat Countersunk Head Screw, M3×6
27	5102843	Flat Countersunk Head Screw, M3×6
28	5308980	Front Panel
	5047720	Smoked Plate
29	6906031	Spring, POWER switch
30	7106083	Push Button, POWER switch
31	1130350	Push Switch, POWER
32	2430210	Headphone Jack
33	1060310	5kΩ(C)×4 BASS volume
34	1060310	5kΩ(C)×4 TREBLE volume
35	1060300	250kΩ(MN)×4 BALANCE volume
36	1060290	250kΩ(B)×4 VOLUME
37	1130800	Push Switch (7 Stage)
38	5109122	Binding Head Screw, 3×8
39	5109122	Binding Head Screw, 3×8
40	5246470	Mounting Plate, Front Panel
41	1102540	Rotary Switch Y-2-5-4, SELECTOR
42	7036390	Tuning Ass'y
43	5407570	Dial Scale
44	5416370	Dial Pointer
45	5109121	Binding Head Screw, 3×6
46	5269460	Holder, signal meter
47	7726050	Meter Lamp Ass'y
48	0420040	Fuse Type Lamp (7V 300mA)
49	4300610	Signal Meter
50	5109122	Binding Head Tapping Screw, 3×8
51	5109122	Binding Head Tapping Screw, 3×8
52	0400390	Lead Type Lamp (6V 30mA), STEREO Indicator
53	0400310	Lead Type Lamp (7V 100mA), 2-CH Indicator
54	0400310	Lead Type Lamp (7V 100mA), 4-CH Indicator
55	5066210	Illuminator Box
56	0420040	Fuse Type Lamp (7V 300mA)
57	5101165	Binding Head Screw, M4×14
58	5516911	Rubber Foot
59	5101165	Binding Head Screw, M4×14
60	5516911	Rubber Foot
61	5109222	Binding Head Tapping Screw, 3×8
62	5109222	Binding Head Tapping Screw, 3×8
63	5058160	Bottom Plate

www.hifiengine.com

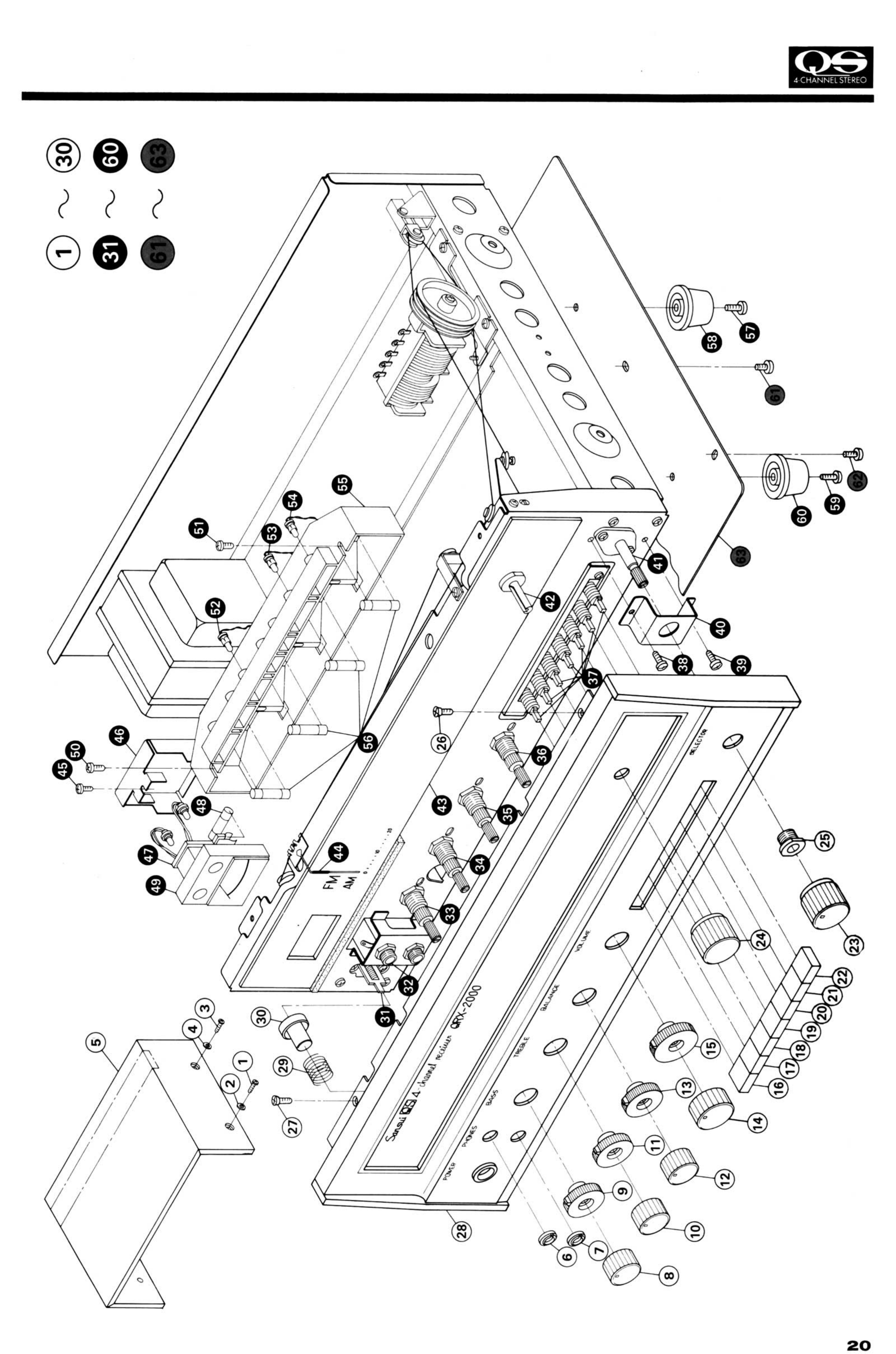
30 ~ 1
60 ~ 31
63 ~ 61
Sansui QS 4-channel receiver QRX-2000
POWER
PHONES
BASS
TREBLE
BALANCE
VOLUME
SELECTOR
FM
AM

6-7. Other Parts (Top Side)

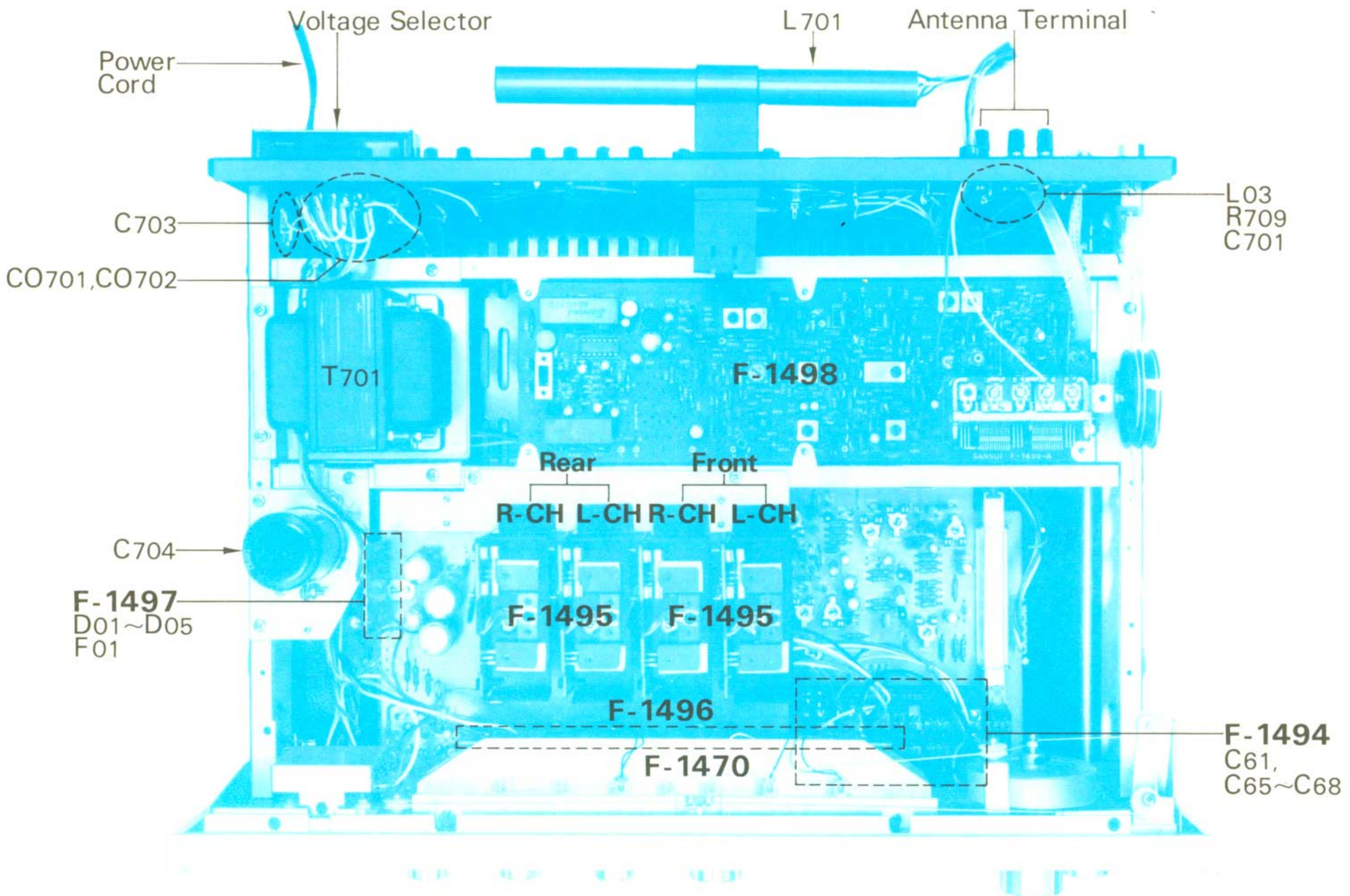

Top Side Parts List

Parts No.	Stock No.	Description
	7591970	F-1494 Switch Circuit Board Ass'y
C61	0601227	0.022μF 50V M.C.
C65	0620181	180pF
C66	0620181	180pF
C67	0620181	180pF
C68	0620181	180pF
		50V P.C.
	7591980	F-1497 Fuse Circuit Board Ass'y
D01	0310960	S 1.5-02
D02	0310960	S 1.5-02
D03	0310960	S 1.5-02
D04	0410960	S 1.5-02
D05	0310340 or 0310870	10D-1 or SRIFM2
		Diode
F01	0432890, 1	4A Wired-in Fuse
C701	0660101	100pF 50V C.C.
C703	0605476	0.0047μF 250V M.C.
C704	0559322	4700μF 50V E.C.
R709	0303122	1.2kΩ ½W C.R.
L03	4290110	Choke Coil
L701	4200550	Bar Antenna (ARS-31B)

Parts No.	Stock No.	Description
CO701	2450040	AC Outlet
CO702	2450040	AC Outlet
T701	4001400	Power Transformer
	2410080	Voltage Selector, socket
	2410090	Voltage Selector, plug
	2210190	Antenna Terminal
	3800020	Power Cord (KP-200)

www.hifiengine.com

6-8. Other Parts (Bottom Side)

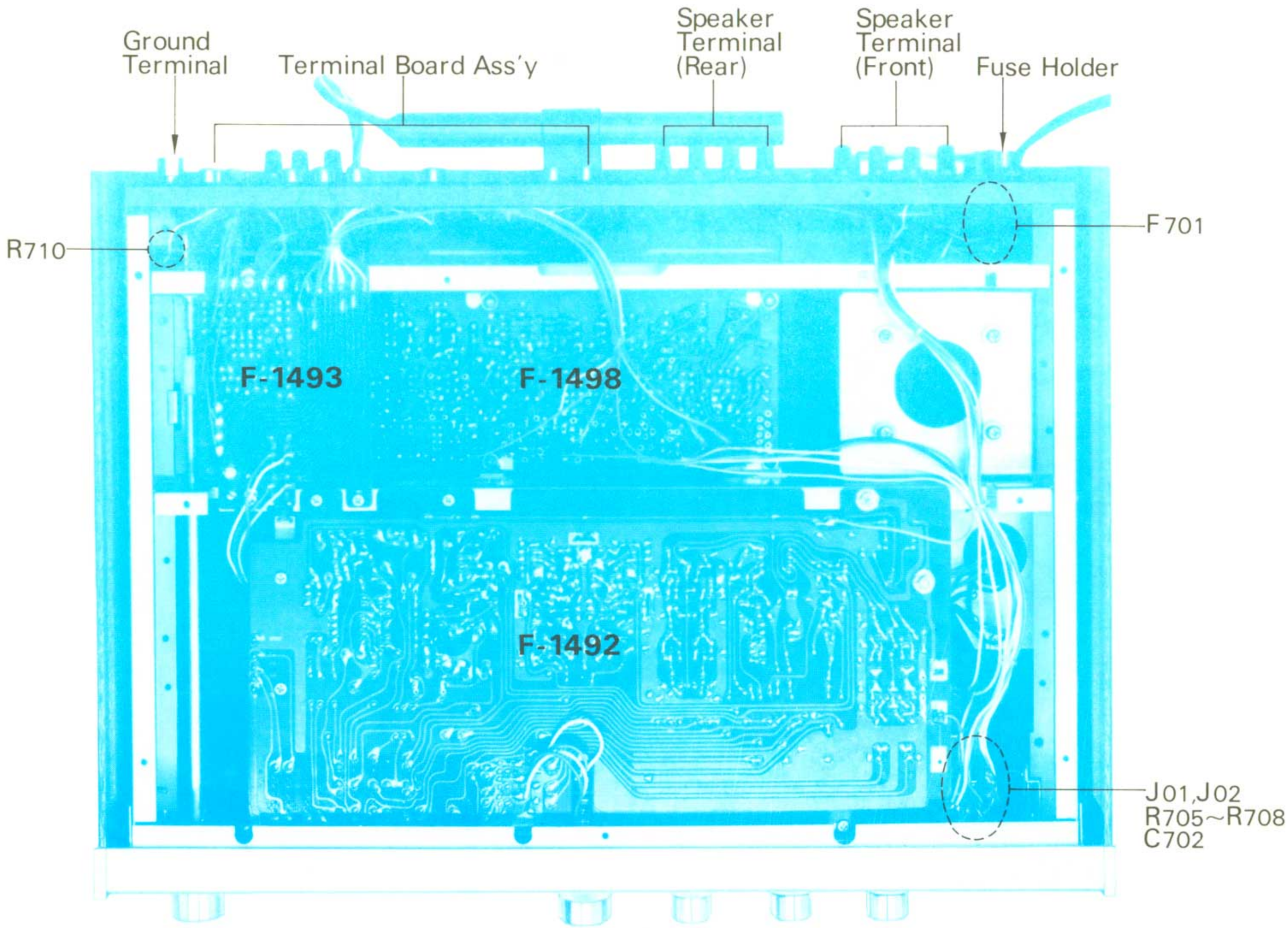

Bottom Side Parts List

Parts No.	Stock No.	Description		
C702	0605337	0.033μF	250V	M.C.
R701	0107104	100kΩ	¼W	C.R.
R702	0107104	100kΩ		
R703	0107334	330kΩ		
R704	0107334	330kΩ		
R705	0103221	220Ω	½W	C.R.
R706	0103221	220Ω		
R707	0103221	220Ω		
R708	0103221	220Ω		
R710	0103821	820Ω		
J01, 02	2430210	Phone Jack		
F701	0431240	2A Power Fuse (100~117V)		
	0431230	1.5A Power Fuse (220~240V)		
	2300060	Fuse Holder		
	2210200	4P Speaker Terminal (Front)		
	2210200	4P Speaker Terminal (Rear)		
	7716010	Terminal Board Ass'y		
	2230050	Ground Terminal		

Abbreviations

C.R.	Carbon Resistor	BP.E.C.	Bi-Polar Electrolytic Capacitor
S.R.	Solid Resistor		
Ce.R.	Cement Resistor	C.C.	Ceramic Capacitor
M.R.	Metallized Film Resistor	Mi.C.	Mica Capacitor
		O.C.	Oil Capacitor
M.C.	Mylar Capacitor	P.C.	Polystyrene Capacitor
E.C.	Electrolytic Capacitor	T.C.	Tantalum Capacitor

www.hifiengine.com

7. PACKING LIST

Parts No.	Stock No.	Description
1	9017350	Inner Packing (upper)
2	9027723	Stylofoam Packing
3	9007721	Carton Case

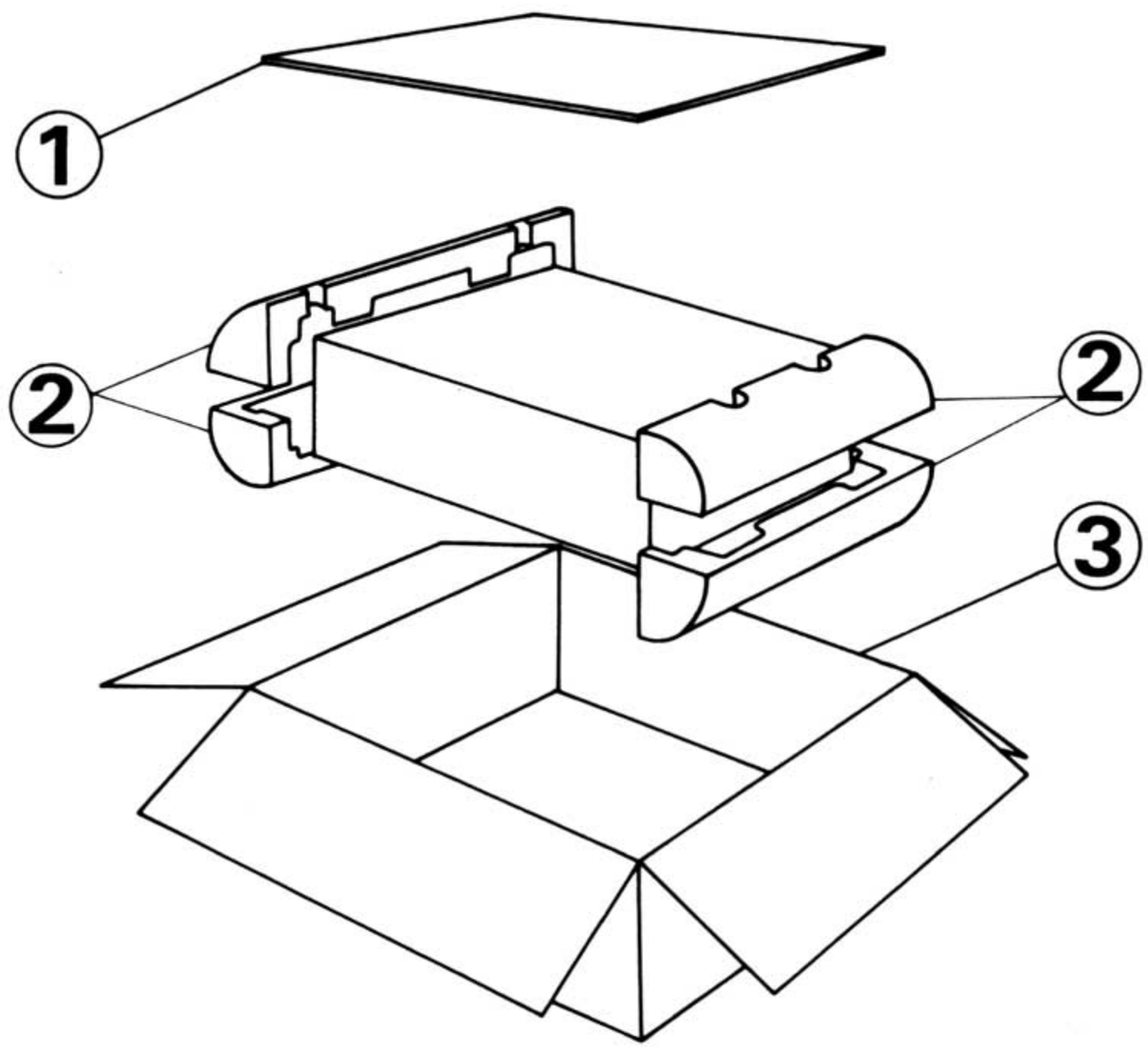

8. ACCESSORY PARTS LIST

Stock No.	Description
9406020	Polishing Cloth
0433610	2A Quick Acting Fuse
9207570	Operating Instructions
9227570	Operating Instruction sheet
3820010	FM Antenna AM Antenna

www.hifiengine.com

9. SCHEMATIC DIAGRAM OF TUNER SECTION

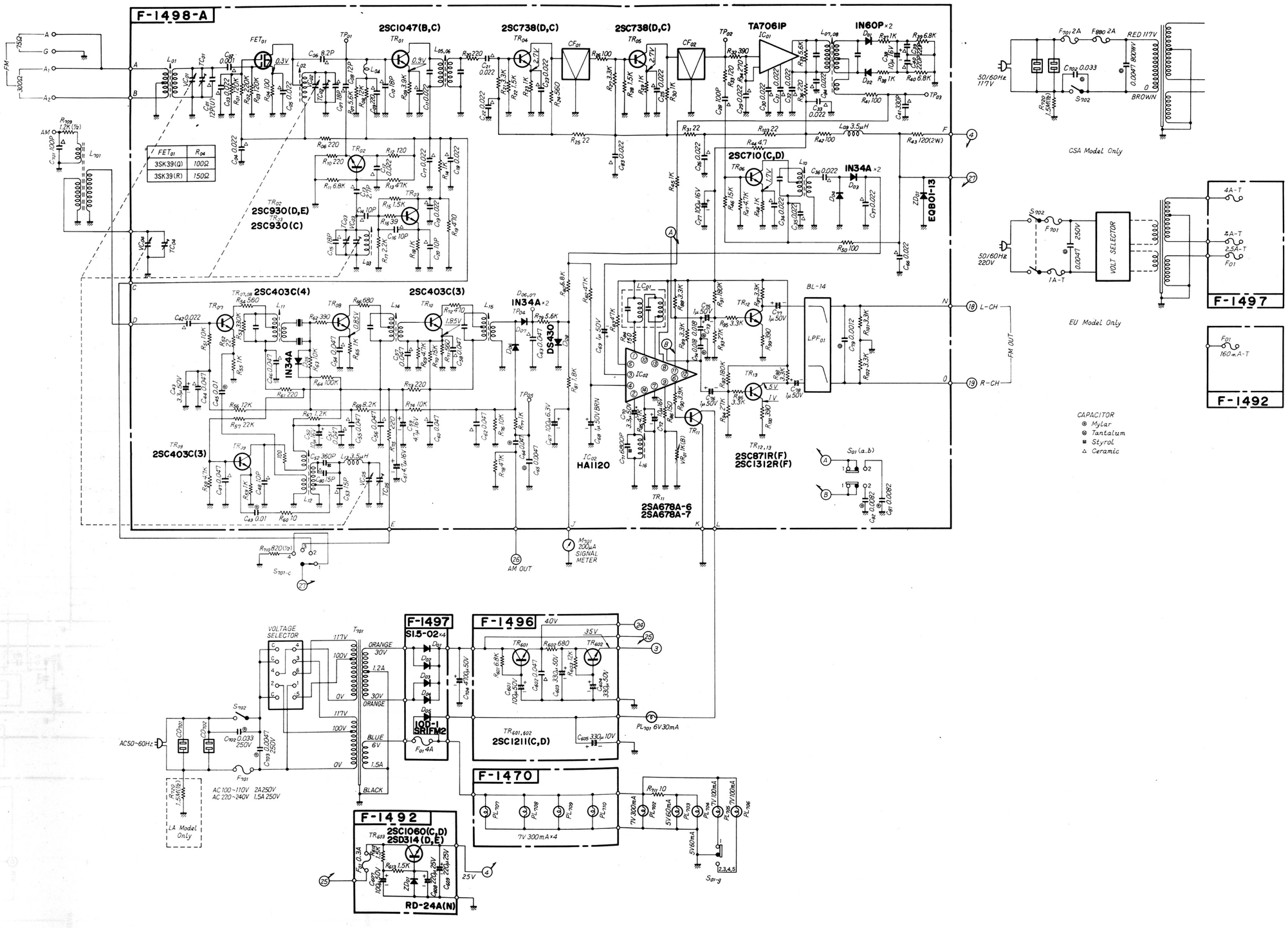

10. SCHEMATIC DIAGRAM OF AUDIO SECTION

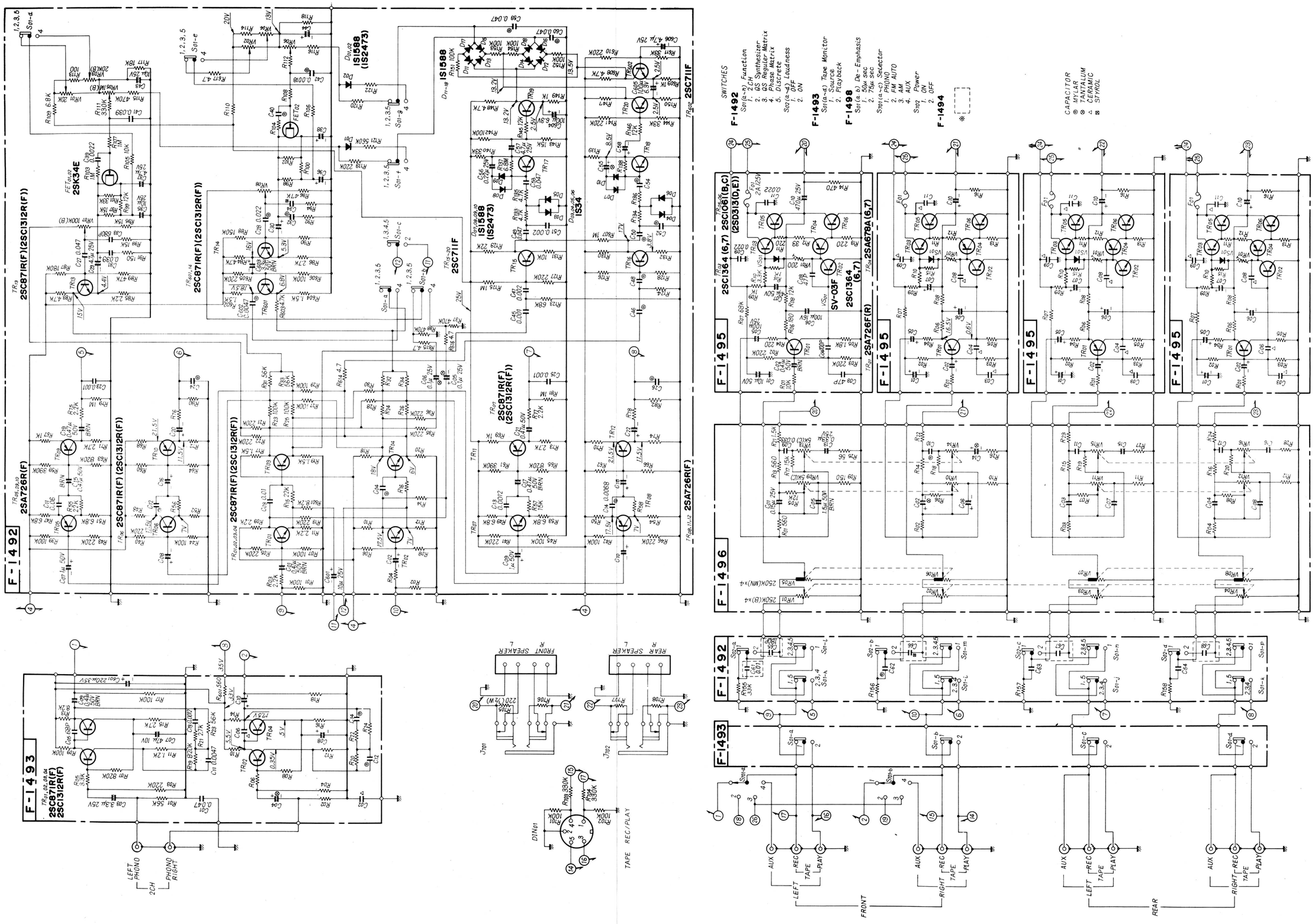

Sansui

SANSUI ELECTRIC CO., LTD.
14-1, 2-chome, Izumi, Suginami-ku, Tokyo 168, Japan.
TELEPHONE: (03) 323-1111/TELEX: 232-2076

SM011

Printed in Japan (34M)

www.hifiengine.com