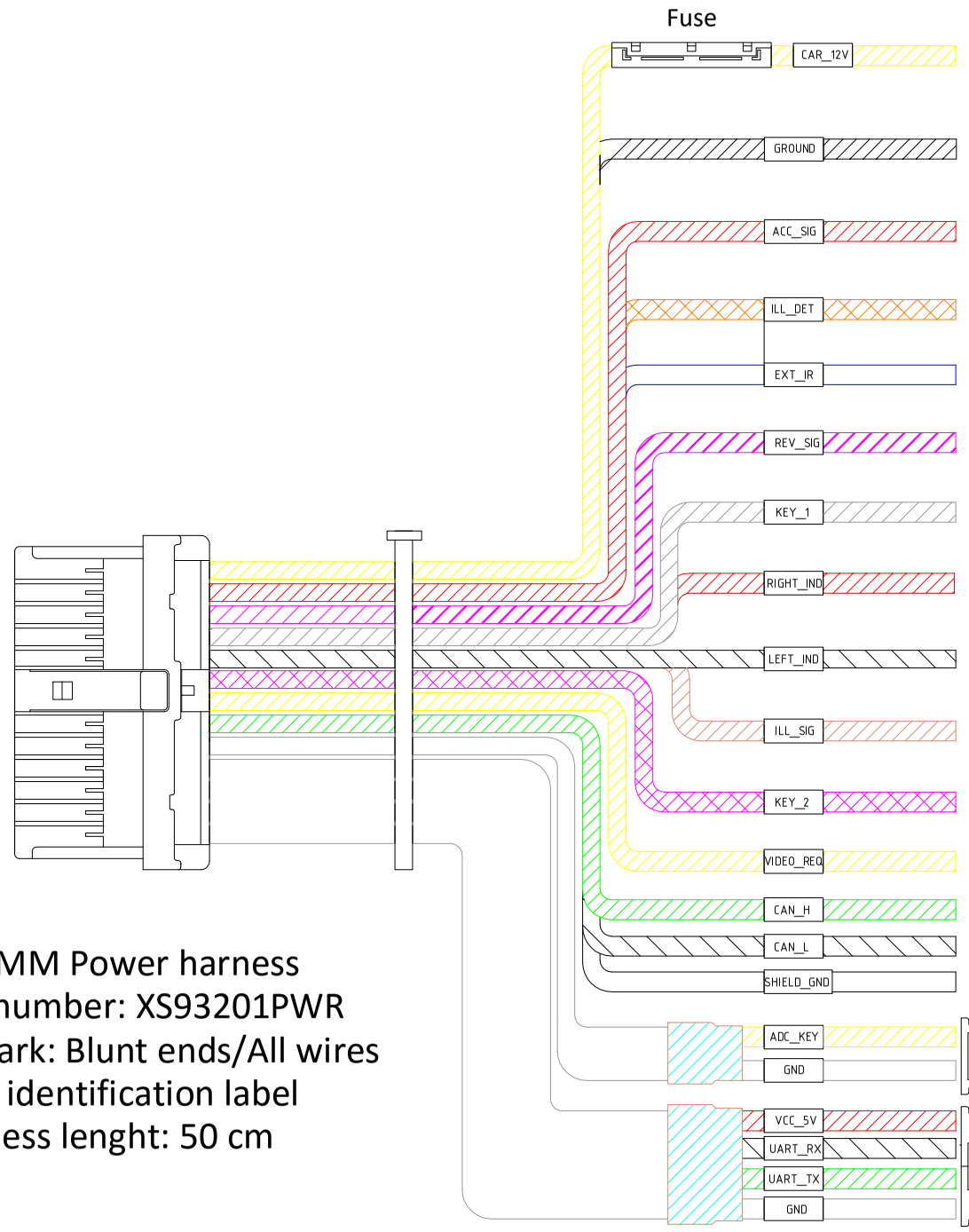

Battery | Yellow | Position 1

Ground | Black | Position 7

Ignition | Red | Position 6

Illumination detection | Orange | Position 3

External IR Comm| Blue| Position 8

Reverse Signal| Violet| Position 11

Programmable function 1| Grey| Position 18

Right turn signal | Red | Position 20

Left turn signal | White | Position 21

Illumination signal | Brown| Position 22

Programmable function 2| Pink| Position 24

Video Request | Yellow | Position 26

CAN/J1939 High| Green | Position 5

CAN/J1939 Low| White | Position 19

CAN/J1939 GND| Black | Position 4

ADC Signal line| Yellow| Position 2

ADC GND| Black | Position 27

5V Power supply| Red| Position 23

RS232C Rx line| White | Position 16

RS232C Tx line| Green| Position 15

GND| Black | Position 28

HDCMM Power harness
Partnumber: XS93201PWR
Remark: Blunt ends/All wires
with identification label
Harness lenght: 50 cm