HiFi ENGINE®

For more Hi-Fi manuals and set-up information
please visit www.hifiengine.com

STEREO POWER AMPLIFIER

SPEC-4

SERVICE MANUAL

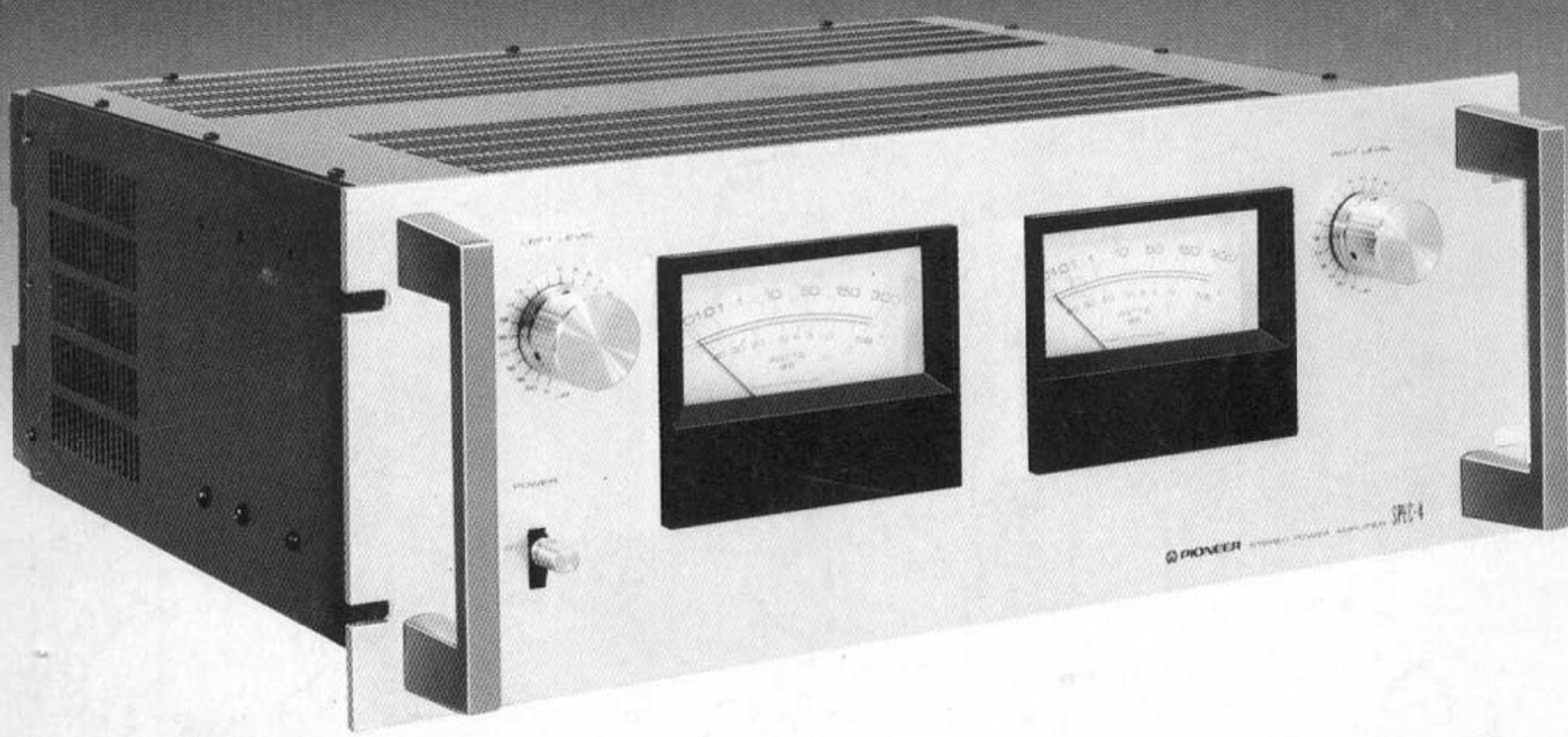

PIONEER®

MODEL SPEC-4 COMES IN TWO VERSIONS DISTINGUISHED AS FOLLOWS:

Type	Voltage	Remarks
KU	120V only	U. S. A. model
S	110V, 120V, 220V and 240V (Switchable)	General export model

- *This service manual is applicable to KU(p2—p40) and S(p41—p48) types.*
- *For servicing of S type please refer to KU type with the exception of descriptions in the Additional Service Manual (p41—p48).*

CONTENTS

1. SPECIFICATIONS 2
2. FRONT PANEL FACILITIES 3
3. CONNECTION DIAGRAM 4
4. BLOCK DIAGRAM 5
5. CIRCUIT DESCRIPTION
   - 5.1 Power Amplifier 6
   - 5.2 Meter Amplifier 6
   - 5.3 Protection Circuit 7
   - 5.4 Power Supply Circuit 9
   - 5.5 Others 9
6. DISASSEMBLY 10
7. PARTS LOCATION 11
8. ADJUSTMENTS
   - 8.1 Power Amplifier 14
   - 8.2 Meter Amplifier 15
9. EXPLODED VIEWS
   - 9.1 External Part 17
   - 9.2 Internal Part 19
10. SCHEMATIC DIAGRAMS, P.C. BOARD PATTERNS AND PARTS LIST
   - 10.1 Schematic Diagram and Miscellaneous Parts 22
   - 10.2 Meter Amplifier Assembly (AWM-113) 25
   - 10.3 Power Amplifier Assembly (AWH-065) 31
   - 10.4 Fuse Assembly (AWR-143) 36
   - 10.5 Power Supply Assembly (AWR-139) 38
   - 10.6 Power Supply Assembly (AWR-140) 39

11. PACKING 40

Additional Service Manual

1. CONTRAST OF MISCELLANEOUS PARTS 42
2. EXPLODED VIEW 43
3. SCHEMATIC DIAGRAMS, P.C. BOARD PATTERN AND PARTS LIST
   3.1 Schematic Diagram and Miscellaneous Parts 45
   3.2 Fuse Assembly (AWR-144) 48

1. SPECIFICATIONS

Semiconductors

ICs 2
Transistors 61
Diodes 62

Power Amplifier

Circuitry ..... Current mirror loaded differential Amplifier, 3-stage darlington parallel push-pull, direct-coupled OCL.
Continuous Power Output from 20 Hertz to 20,000 Hertz
(Both channels driven) . . . 180 watts per channel (4 ohms)
150 watts per channel (8 ohms)
Total Harmonic Distortion (20 Hertz to 20,000 Hertz, 8 ohms)
Continuous rated power output 0.01%
75 watts per channel power output 0.01%
1 watt per channel power output 0.01%
Intermodulation Distortion (50 Hertz: 7,000 Hertz=4:1, 8 ohms)
Continuous rated power output 0.01%
75 watts per channel power output 0.005%
1 watt per channel power output 0.005%
Frequency Response .... 5 Hertz to 100,000 Hertz $\pm^{0}_{1}$ dB
Input (Sensitivity/Impedance) ..... 1V/50k ohms
Output
Speaker ..... 4 ohms to 16 ohms
Damping Factor (20 Hertz to 20,000 Hertz, 8 ohms) 100
Hum and Noise (IHF, short-circuited, A network) 115dB

Miscellaneous

Power Requirements ..... AC 120V 60 Hertz
Power Consumption ..... 760 watts (UL)
Dimensions ..... 480(W) x 187(H) x 445(D) mm
18-7/8 x 7-3/8 x 17-7/16 in
Weight: Without Package 24.5kg; 53lb 14oz

Furnished Parts

Connection Cord with Pin Plugs 1
Operating Instructions 1

NOTE: **Downloaded from www.hifiengine.com**
Specifications and the design subject to possible modification without notice due to improvements.

2. FRONT PANEL FACILITIES

POWER SWITCH

Set to ON position to energize SPEC-4. After setting to ON, there is a brief delay before sound is obtained. This is due to the operation of the muting circuit which prevents noise when the POWER is switched. This function does not indicate difficulty and normal operating condition is attained in a several seconds.

PEAK LEVEL METERS

When speaker systems of 8ohm nominal impedance are connected, these provide direct readout of the peak output power in Watts.

NOTE:
Speaker system impedance varies according to frequency. To obtain a precise measurement of the output power, remove speaker connections and connect 8ohm dummy loads across the SPEAKER terminals.

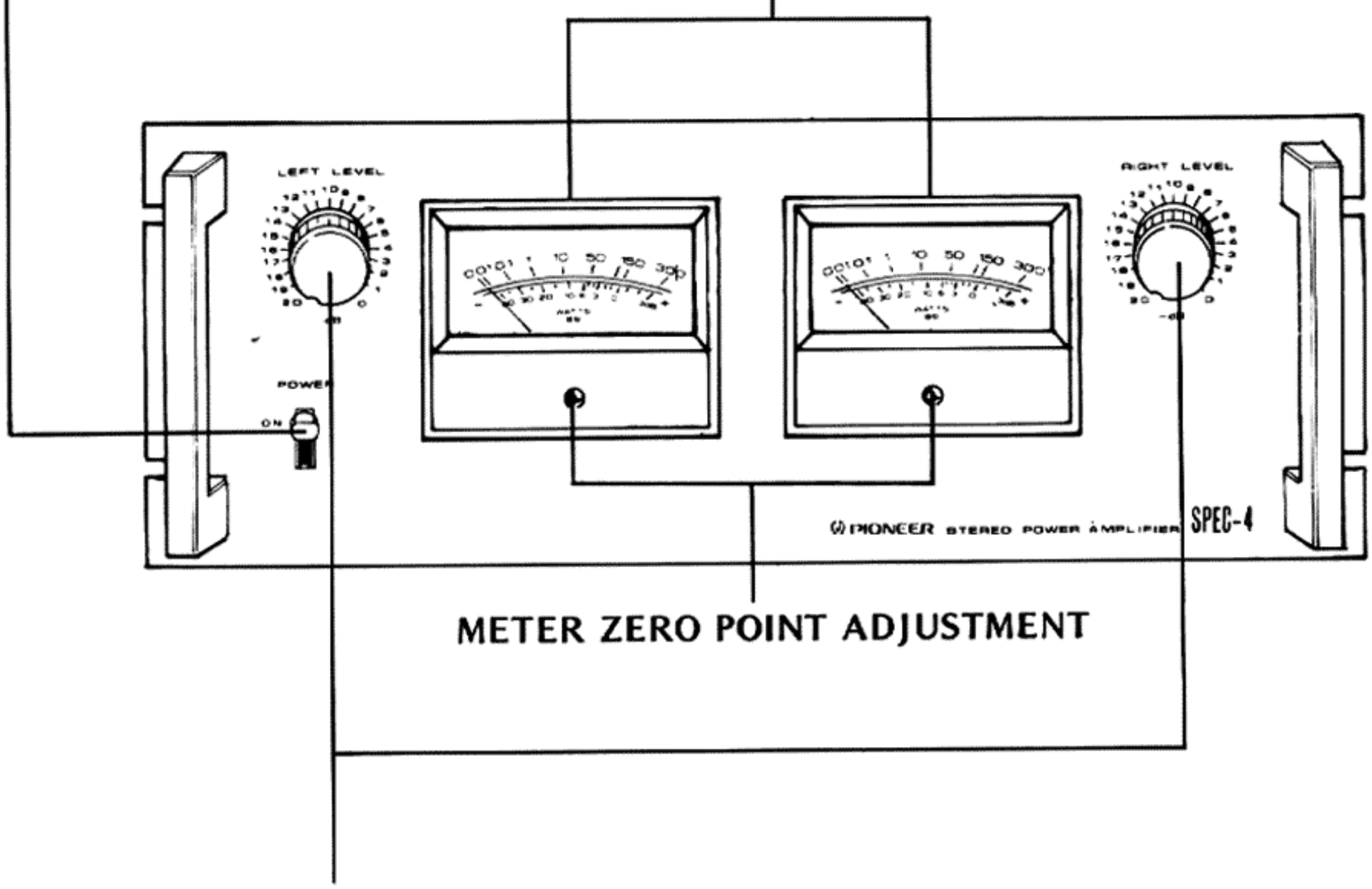

INPUT LEVEL CONTROLS (LEFT & RIGHT)

Adjust the LEFT and RIGHT controls according to the output level (voltage) of the preamplifier connected to the SPEC-4's INPUT (L, R) terminals. If the controls are turned fully to the right (to the "0dB" position), then the rated input will be 1V. Conversely, if they are turned to the left, this will yield an attenuation equal to the graduations, and the rated power output can be varied. Standard input voltages are: 0dB = 1V, –6dB = 2V, –10dB = 3V, –12dB = 4V, and –14dB = 5V.

NOTE:
Turn the controls counterclockwise to the 0dB position if you are using a preamplifier with a maximum output voltage of less than 1V. In such cases, it will not be possible to yield the rated power output listed in the SPEC-4's specifications. (For example one-quarter of the power output is obtained with a preamplifier having a maximum output of 0.5V.)

HEXAGONAL WRENCH

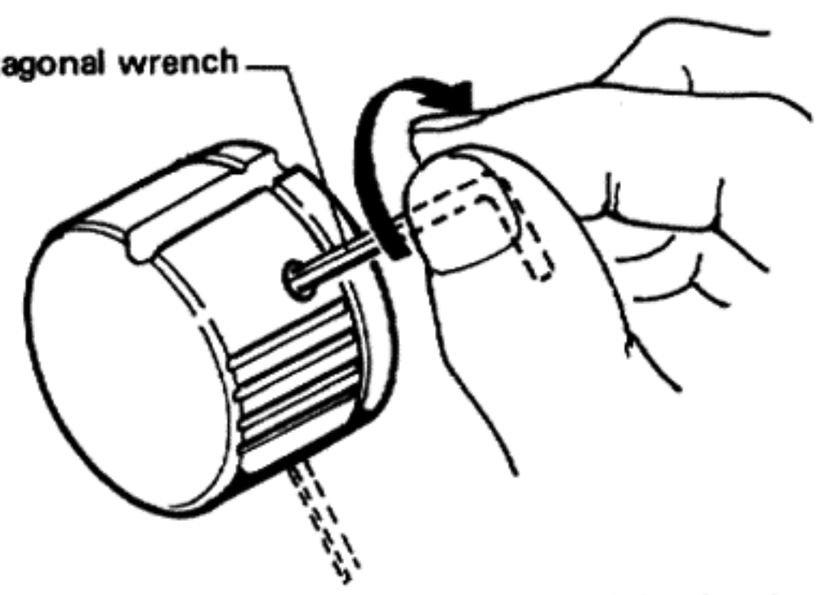

If any of the control knobs should happen to come loose, tighten by means of the hexagonal wrench.

3. CONNECTION DIAGRAM

Before making the connections, check that the power is off. Also, make sure that you turn the power off if you want to change over the connections when the components are operating.

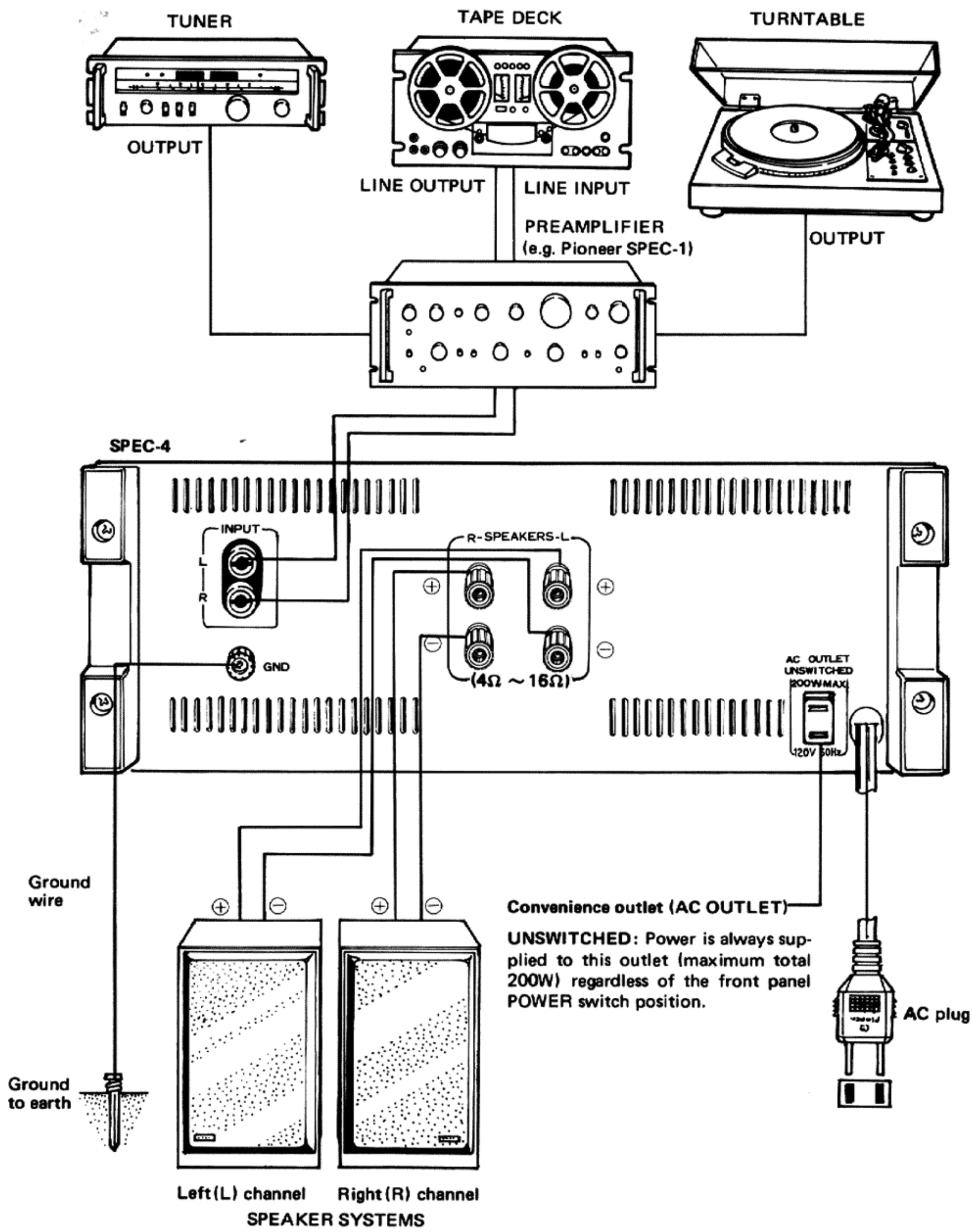

4 BLOCK DIAGRAM

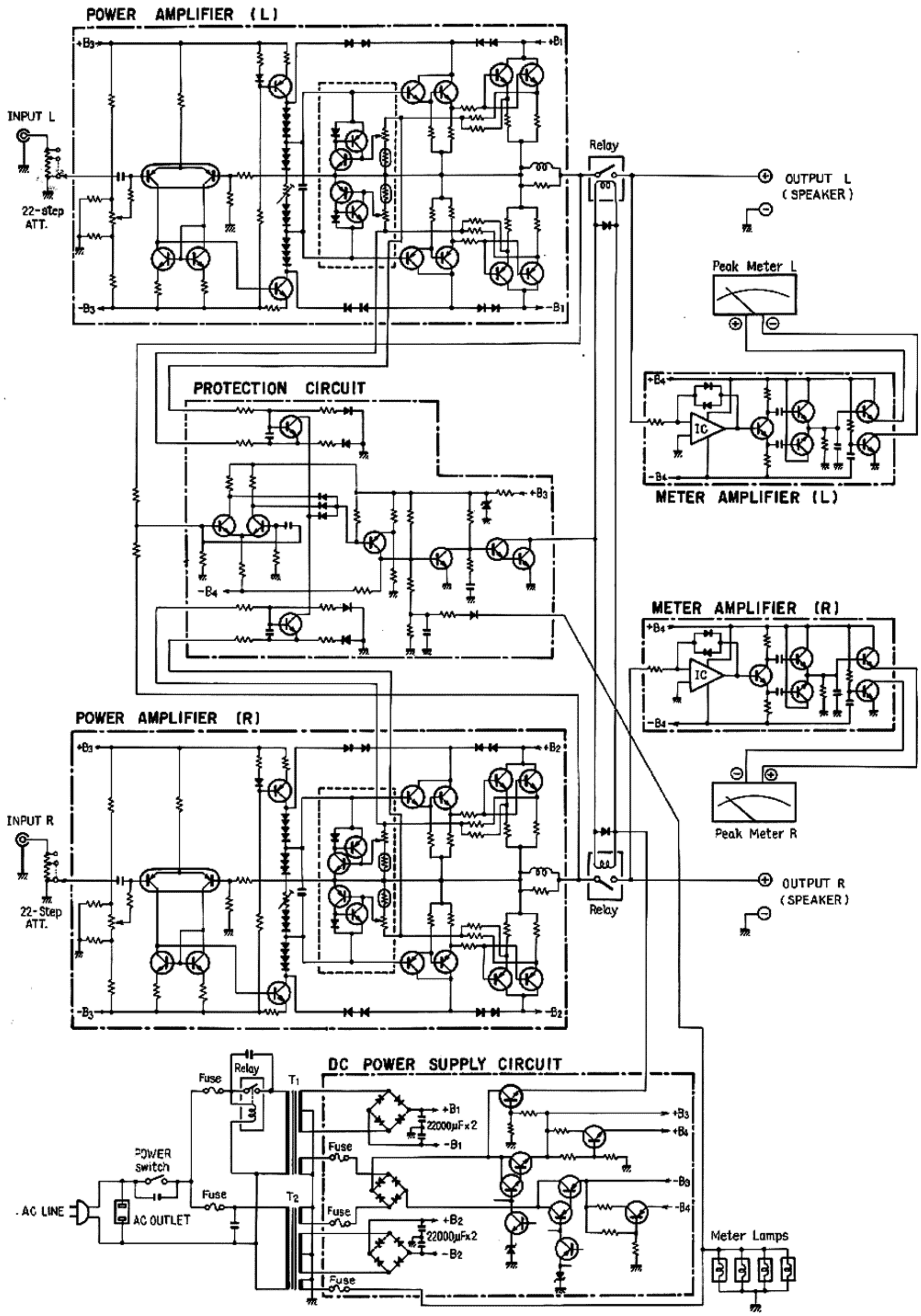

5. CIRCUIT DESCRIPTION

5.1 POWER AMPLIFIER

This unit is a DC amplifier with an input coupling capacitor. Generally, in direct coupled amplifiers, 100% NFB is applied at the DC stage. This technique provides a DC gain of 1 and stabilizes the circuit. The operation is performed by giving the NFB circuit a time constant. However, this adversely effects the low range phase characterisitcs in the audio frequency range.

Careful consideration has been given to stability in the circuit design of this unit; the time constant of the low range of the NFB circuit has been eliminated, and amplification is pefrormed up to the DC stage. This improves the low range phase characteristics and tonal quality. Moreover, the low range frequency response is determined by the time constant of the input coupling section.

The first stage is a PNP dual transistor differential amplifier with a current mirror circuit, which enables stable operation and provides high gain from the DC to the ultrahigh frequency range.

The second stage (predriver stage) is a Class A amplifier. High voltage gain is obtained by inserting a constant current circuit for the load (voltage gain is necessary at this stage because the voltage gain of the power stage is zero). The power stage is a 3-stage Darlington connection and the final stage is a parallel SEPP.

A power limiter circuit protects the power stage. D_1, D_2, D_3 and D_4, D_5, D_6 are drive voltage limiters which prevent overdriving of the power stage. D_3, D_6 shift the DC level of the signal and D_1, D_2, D_4, D_5 conduct the overdrive voltage to prevent the power stage being overdriven.

NOTE:
Since the power supply voltage of the power stage is lower than that of the drive stage at high outputs, D_1, D_2 and D_4, D_5 conduct the overdrive voltage.

The power limiter is a current-detection type. This limiter detects the current forced thru the power transistor by the voltage generated by the emitter resistance of the power transistors. When the output has exceeded 180W at a load of 4 ohms or less, Q_{13} — Q_{16} operate to limit the drive voltage. This prevents the output from increasing even if an input greater than this is applied.

5.2 METER AMPLIFIER

A peak output meter is provided which permits direct reading of an 8 ohms load output from 0.01W to 300W.

The meter amplifier consists of the logarithmic compression circuit, absolute value detection circuit, peak hold circuit, and meter drive circuit shown in Fig. 2.

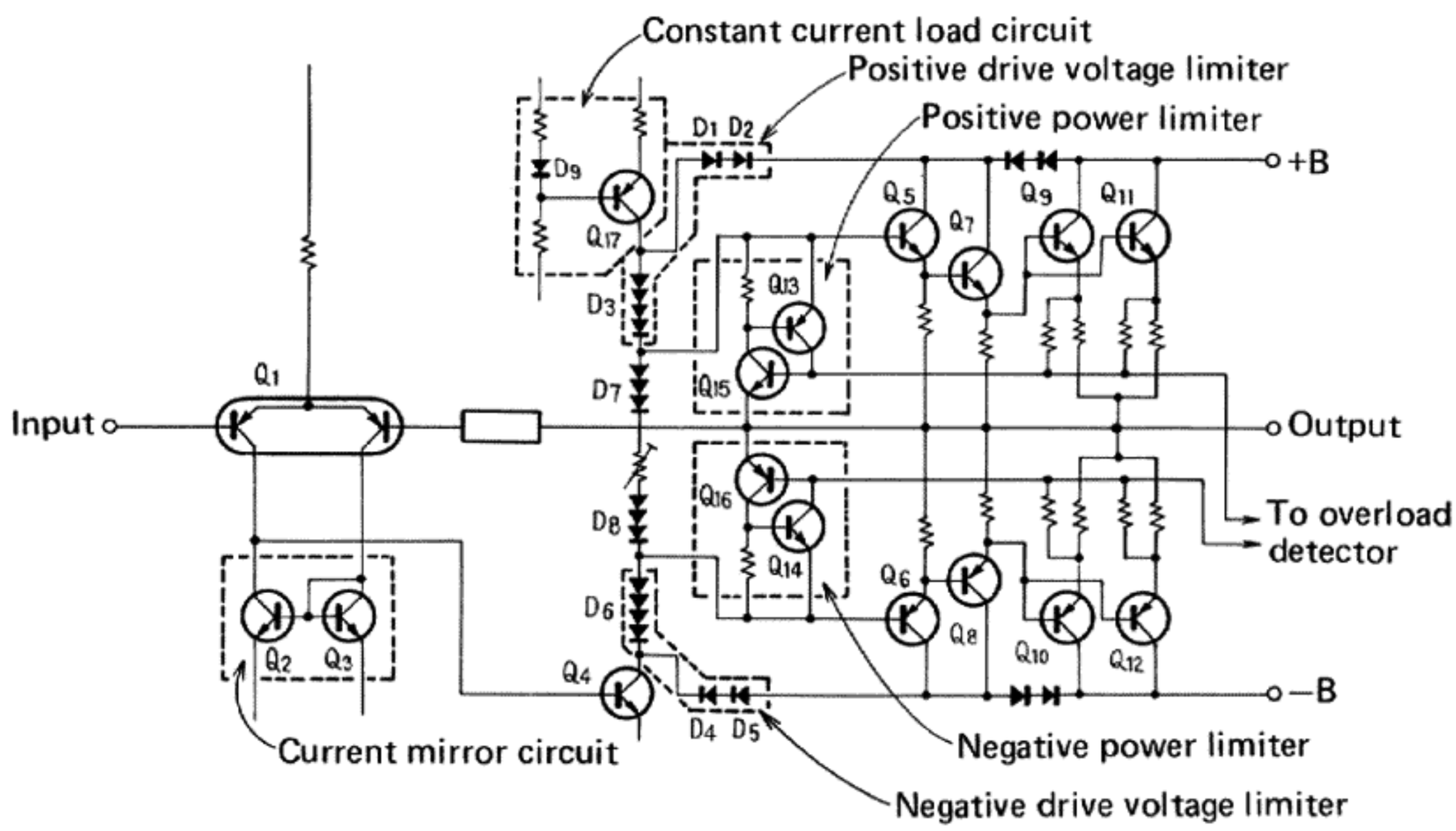

Fig. 1 Power amplifier circuit

The input signal is divided by R_1, R_2 and sent to the logarithmic compression circuit. The logarithmic compression circuit is an audio IC (TA7136P2) and utilizes the rise characteristic of diodes D_1, D_2 in the NFB loop to reduce the dynamic range of the signal. This creates an input/output characteristic which attenuates low level inputs very little and high level inputs substantially. The characteristic is compensated by inserting R_4 in parallel with D_1, D_2 and the circuit is temperature compensated with a thermistor so that the meter scale is almost logarithmically graduated from 0.01W to 300W.
The compressed signal is applied to the absolute value detector. This circuit produces a reverse phase signal by means of Q_2 and extracts and combines the positive half cycle by means of Q_3 and Q_4. This signal charges C_1 up to the peak value and drives the meter by means of Q_5, Q_6. The charge across C_1 is discharged at the time constant of C_1 and R_5 to determine the fall time of the peak indication of the meter.
The frequency response of the peak meter is given in Fig. 3.

5.3 PROTECTION CIRCUIT

This circuit protects the power transistors in case of overload, the speakers in case of power amplifier malfunction, and also performs a muting function when the power supply is turned ON or OFF. The protection circuit is composed of three sections (Fig. 4).

1. Relay Driver Circuit (Fig. 5)

The relay which connects the output circuits is driven by this circuit. It also performs a muting function to prevent unpleasant noise during ON-OFF operation of the power supply as well as opening the output circuit on command from the detettor circuits.

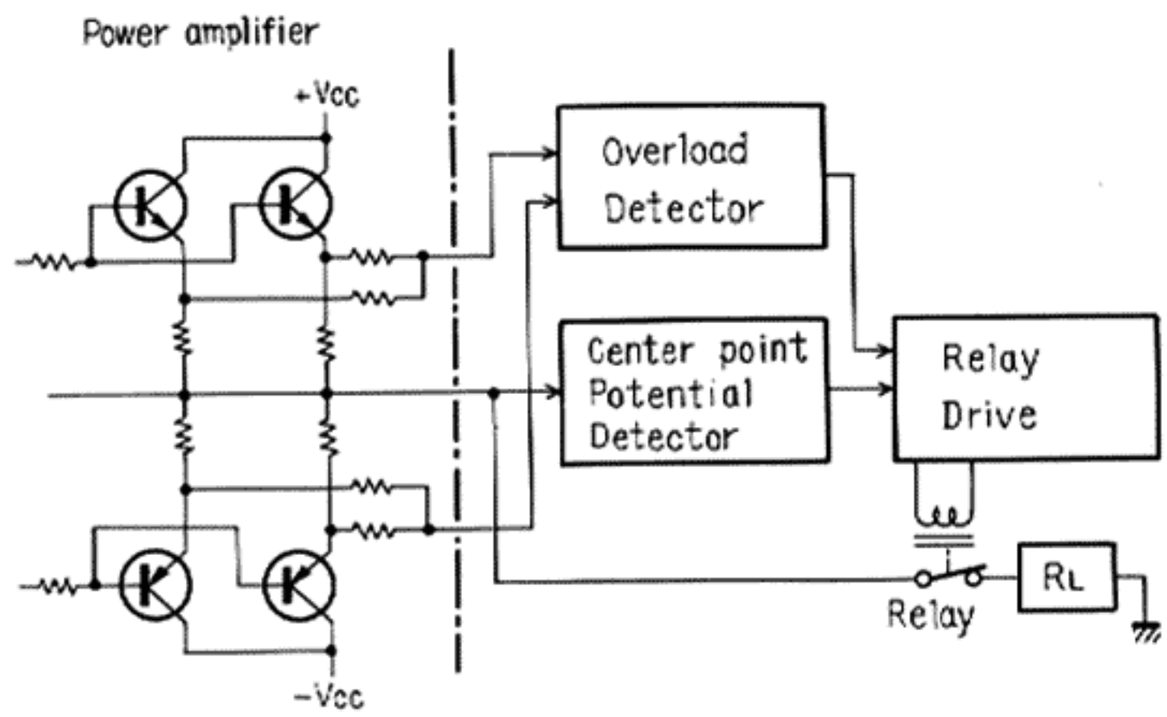

Fig. 4 Block diagram of protection circuit

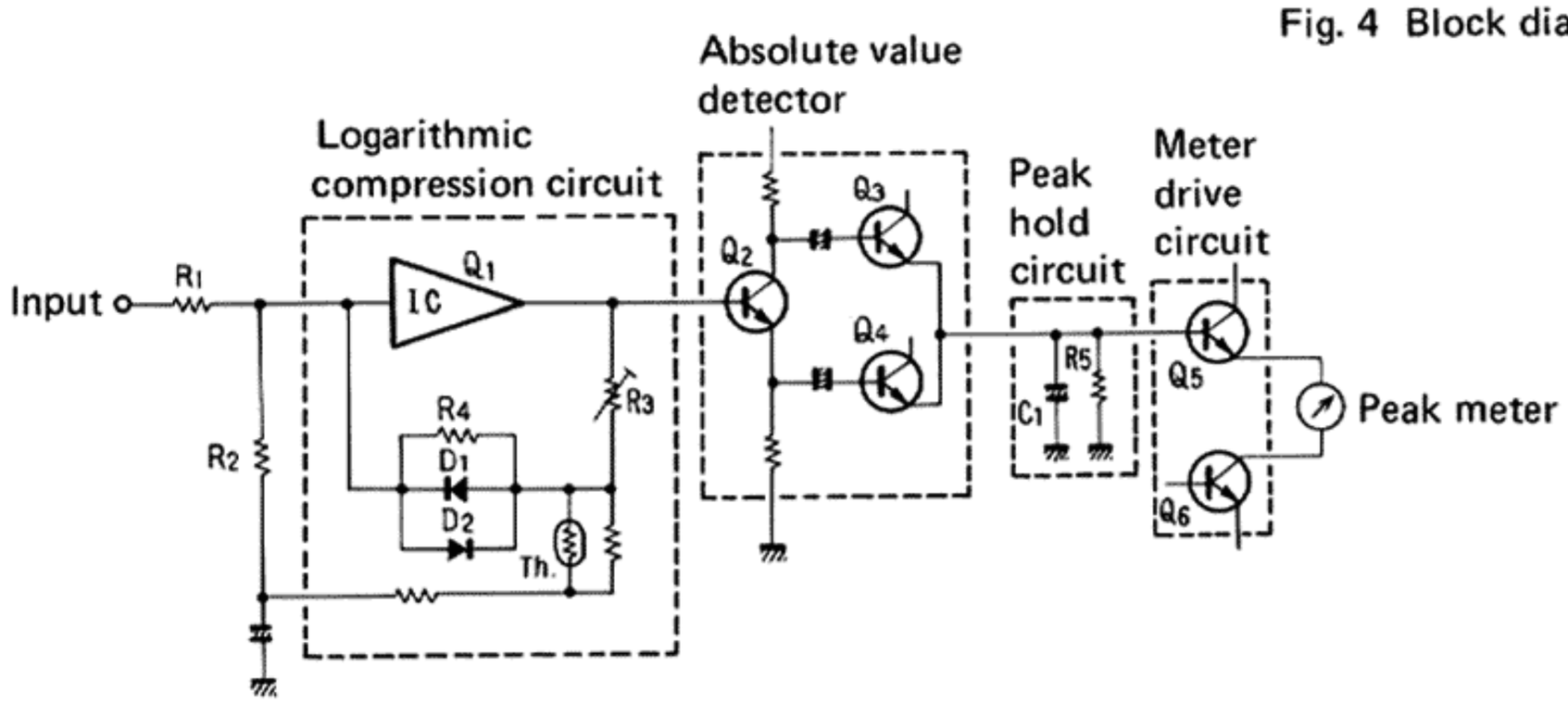

Fig. 2 Meter amplifier circuit

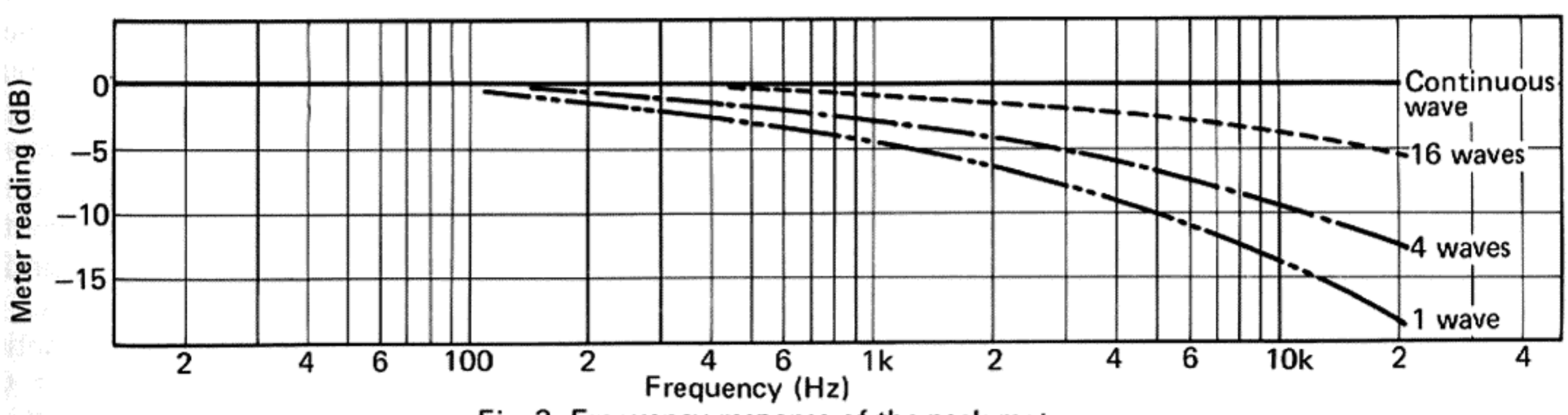

Fig. 3 Frequency response of the peak meter

Muting Operation

When the power supply is turned ON, Q_{11} base is reverse biased through D_2 and R_{22}, turning Q_{11} OFF Q_{12} base potential rises as C_1 charges through R_1 & R_2, and Q_{12} & Q_{13} turn ON several seconds later. The collector current of Q_{13} then flows through the relay coil, operating the relay to turn on the power amplifier output circuit. The reverse bias of Q_{11} base from D_2 & R_{22} disappears when the power supply is set from ON to OFF. Q_{11} remains ON however, due to the residual power supply voltage. C_1 very rapidly discharges, Q_{12} base potential drops and Q_{12} & Q_{13} turn OFF. The relay releases and the power amplifier output circuit turns OFF.

NOTE:
Q_{10} is normally OFF due to base bias and does not participate in the muting operation.

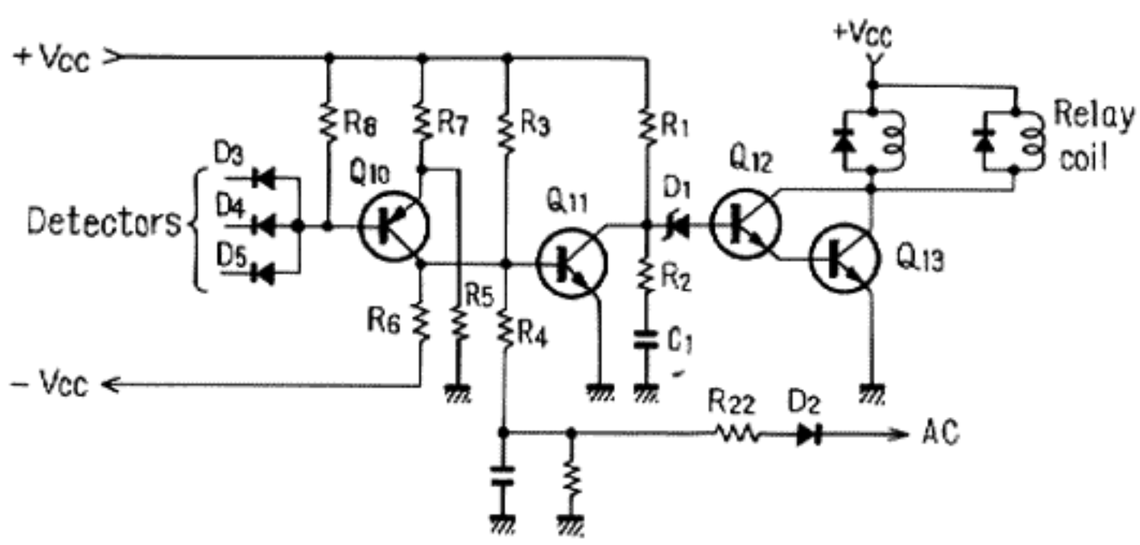

Fig. 5 Relay drive circuit

Operation by Detector Circuit Command

Command from the detector circuits pass through one of D_3, D_4 or D_5 and are applied in the form of a current flow. Q_{10} is normally reverse biased through R_8, but when a large current flows through on of these diodes, Q_{10} base potential declines according to the voltage drop at R_8. Q_{10} then turns ON, Q_{11} base potential rises and Q_{11} turns ON. C_1 rapidly discharges and Q_{12} base potential drops, turning Q_{12} & Q_{13} OFF. The relay releases and the power amplifier output circuit becomes cut off.

2. Overload Detector Circuit

Shorting of the power amplifier load or a load impedance below the specified value causes a command to be sent to the relay drive circuit. This is illustrated in Fig. 6.

With the output stage in class B operation, when Qa is operating in the positive half cycle, Qb becomes cut off and the signal current flows as indicated by the solid arrows in Fig. 6. Point D potential at this time is the point A potential divided by R_{49} and R_{50}. Also, point C potential is the point A potential divided by Re_1 and RL (load). Point D is connected to Q_{12} base and point C to Q_{12} emitter through R_{48} and Re_2. When RL is extremely small, the point C potential becomes considerably lower than point D. This potential difference forward biases Q_{12}. Q_{12} turns ON and current flows in D_3.

Qb operates in the negative half cycle and Qa becomes cut off. The signal flows is indicated by the broken line arrows in the center of Fig. 6. Q_{12} is biased by the potential difference between point C and point E. If RL is extremely small, the point C potential becomes considerably higher than that of point E. Q_{12} turns ON and current flows in D_3.

If large current flows in Qa and Qb, Q_{12} becomes ON due to the Re_1 and Re_2 voltage drops, and current flows in D_3. C_{24} prevents faulty operation due to external noise.

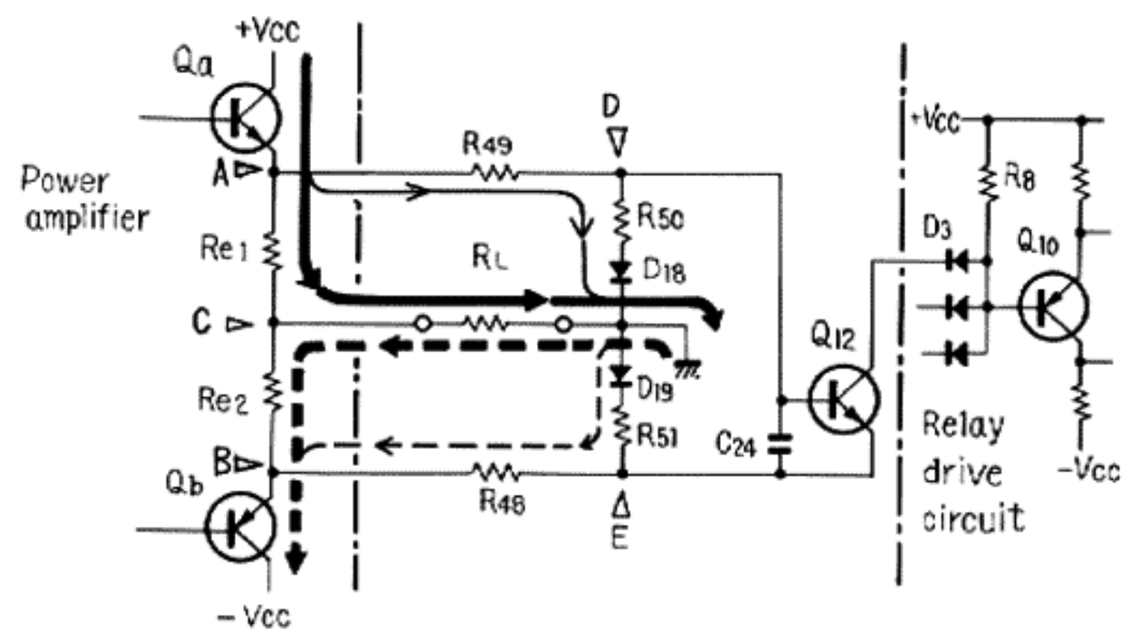

Fig. 6 Overload detector

3. Center Point Potential Detector Circuit

If a DC potential is produced at the junction point of the power amplifier, a command is sent to the relay drive circuit. Fig. 7 shows this operating principle.

Q_8 and Q_9 compose a differential amplifier. When the same input is applied to both input terminals (Q_8 and Q_9 bases), no output is present. However, if there is a difference between the terminal inputs, the difference is amplified and becomes the output between the two collectors. During normal operation, an AC signal only is present at the junction point. As C_3, C_4 reactance is sufficiently low, the same signal is applied to Q_8 and Q_9 bases, resulting in an absence of output at the collector sides.

When a DC potential is produced at the junction point, it becomes the input of Q_9 only. If the voltage is negative, Q_9 collector current declines.

and at Q_8 the collector current increases and the potential drops, causing current to flow through D_5.
If the DC voltage is positive, Q_9 collector current increases and the potential drops, while at Q_8 the collector current decreases and the potential rises. Current therefore flows through D_4.

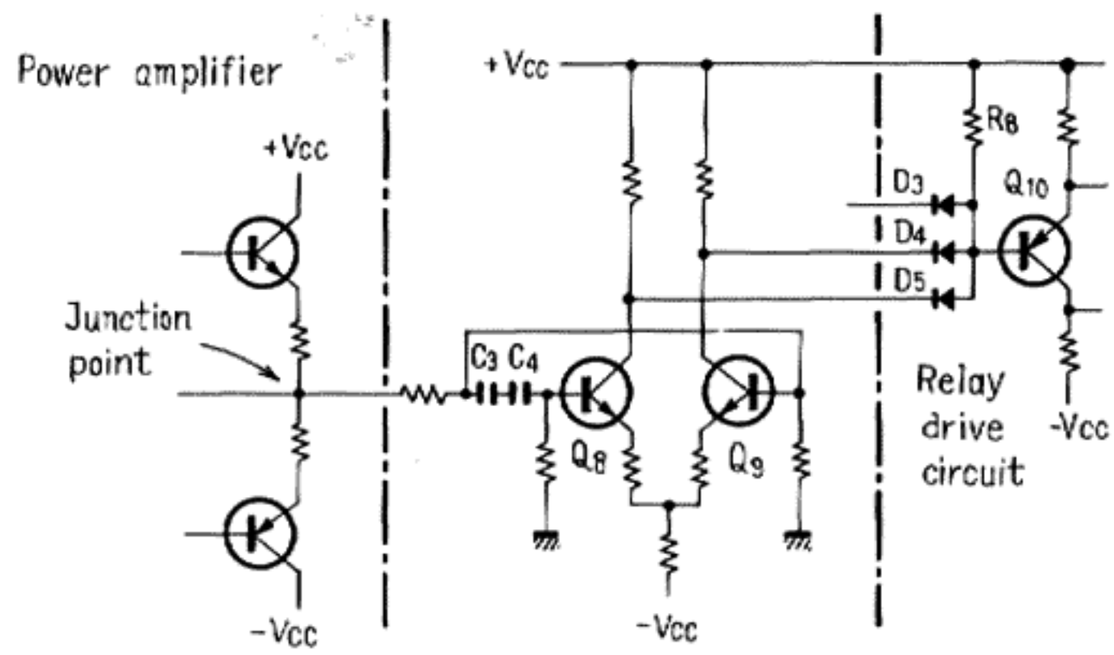

Fig. 7 Center point potential detector

5.3 POWER SUPPLY CIRCUIT

Two power transformers are used. The left channel and right channel power stage power supplies are independent. Power is supplied to each channel by a bridge rectifier and two 22,000μF high capacity capacitors. The power supply before the predriver and for the main amplifier, protection circuit, etc. is supplied to each part thru a bridge rectifier and minus and plus voltage regulators by connecting the windings (different from that of the power stage) of the two power transformers in series.

Surge Current Countermeasures

When the power of an amplifier having two high capacity power supplies such as this unit is turned ON, an extremely large rush current flows. The time the left and right power transformers are powered is staggered somewhat in this amplifier to reduce this rush current to a minimum.
When the power switch is turned ON, T_2 (right channel power transformer) is immediately powered, but since the relay contacts are open, T_1 (left channel power transformer) is not powered. When current flows in the coil of the relay, the relay contacts are closed and T_1 is powered. The rush current is reduced by one half during this 7—9msec delay.

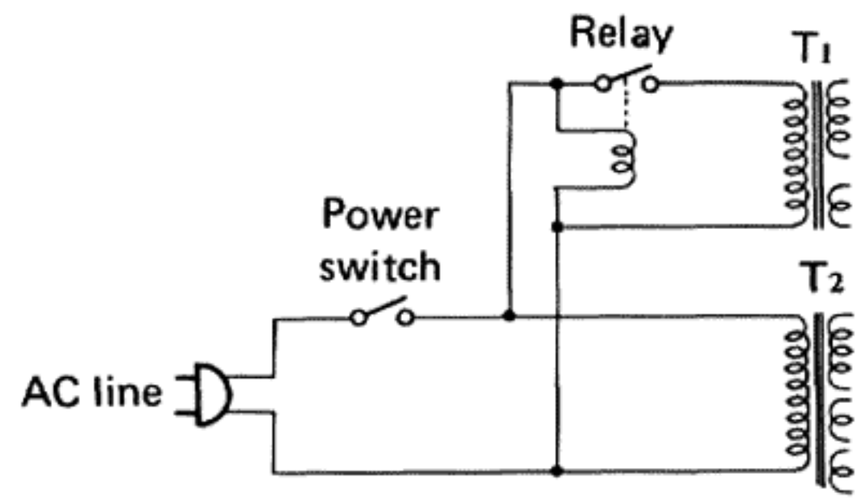

Fig. 8

5.5 OTHERS

The electrolytic capacitor ground connection is a 20mm x 2mm copper plate.
A cord (inner conductor 2.03ϕ, 0.254ϕ x 41 stands) having a DC resistance of about 1/4 that of common elecrric wire is used in the power supply, output, and ground circuits.
The input attenuator covers the 0 to −20dB range in 22 steps. The final position is −∞.

6. DISASSEMBLY

Top cover

Remove the 12 screws(A) to detach the top cover.

Front panel

Loosen the set screws of the 2 LEVEL knobs with an hexagonal wrench and remove all the knobs. Remove the 8 screws(B) and 2 nuts(D) to detach the front panel.

Bottom plate

Remove the 17 screws(C) at the bottom plate and lift off the bottom plate.

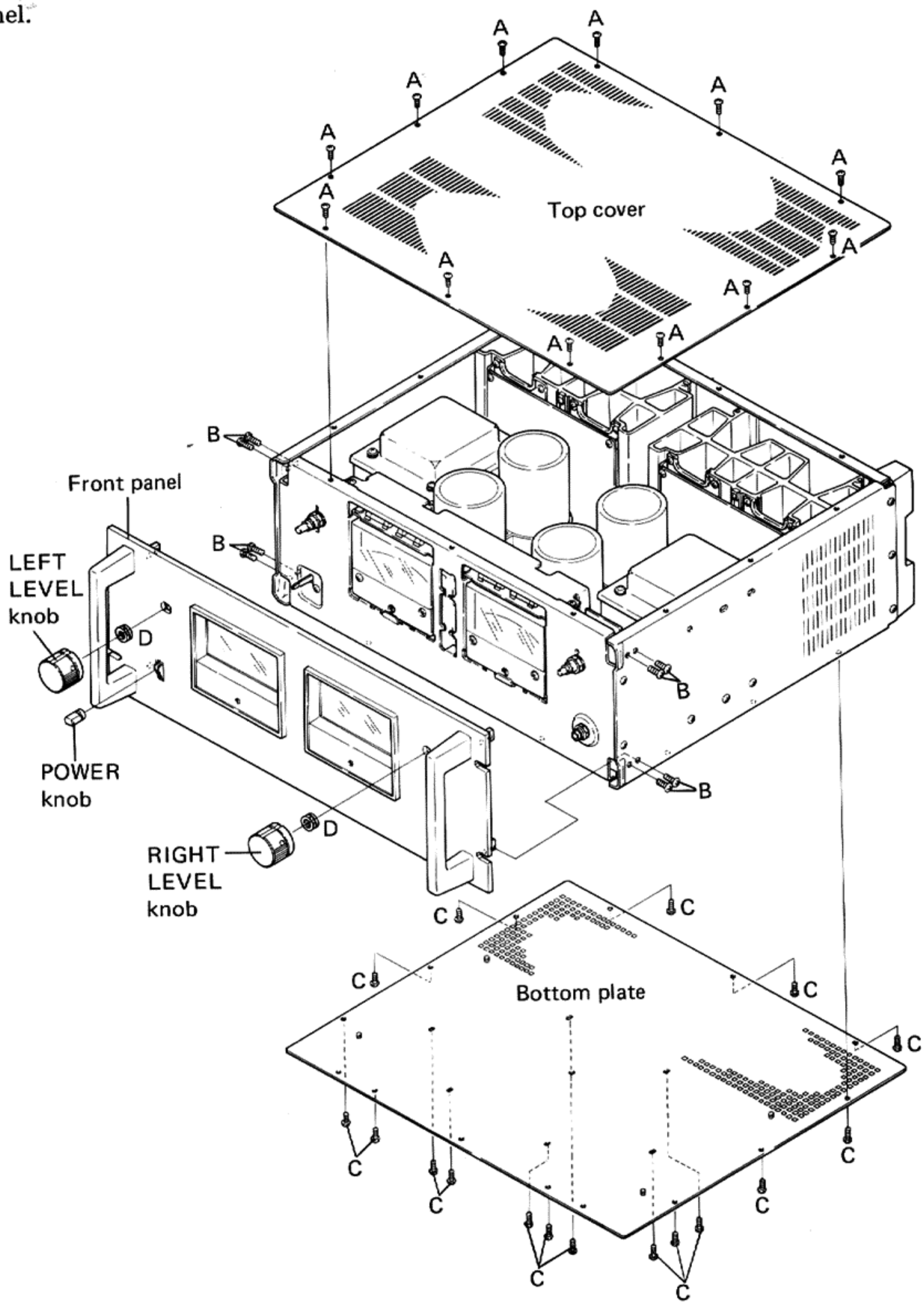

Fig. 9

7. PARTS LOCATION

Front Panel View

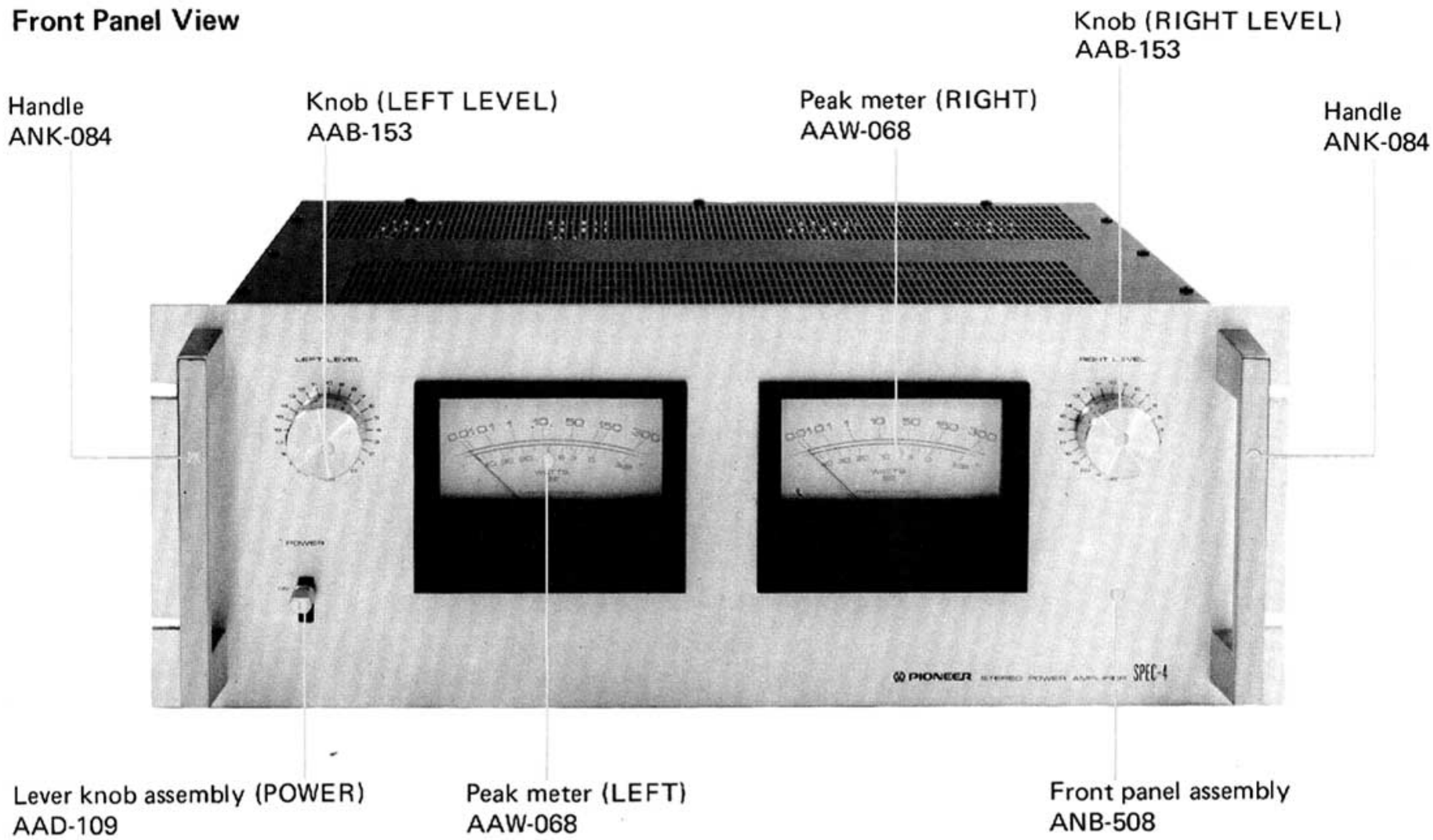

Front View with Panel Removed

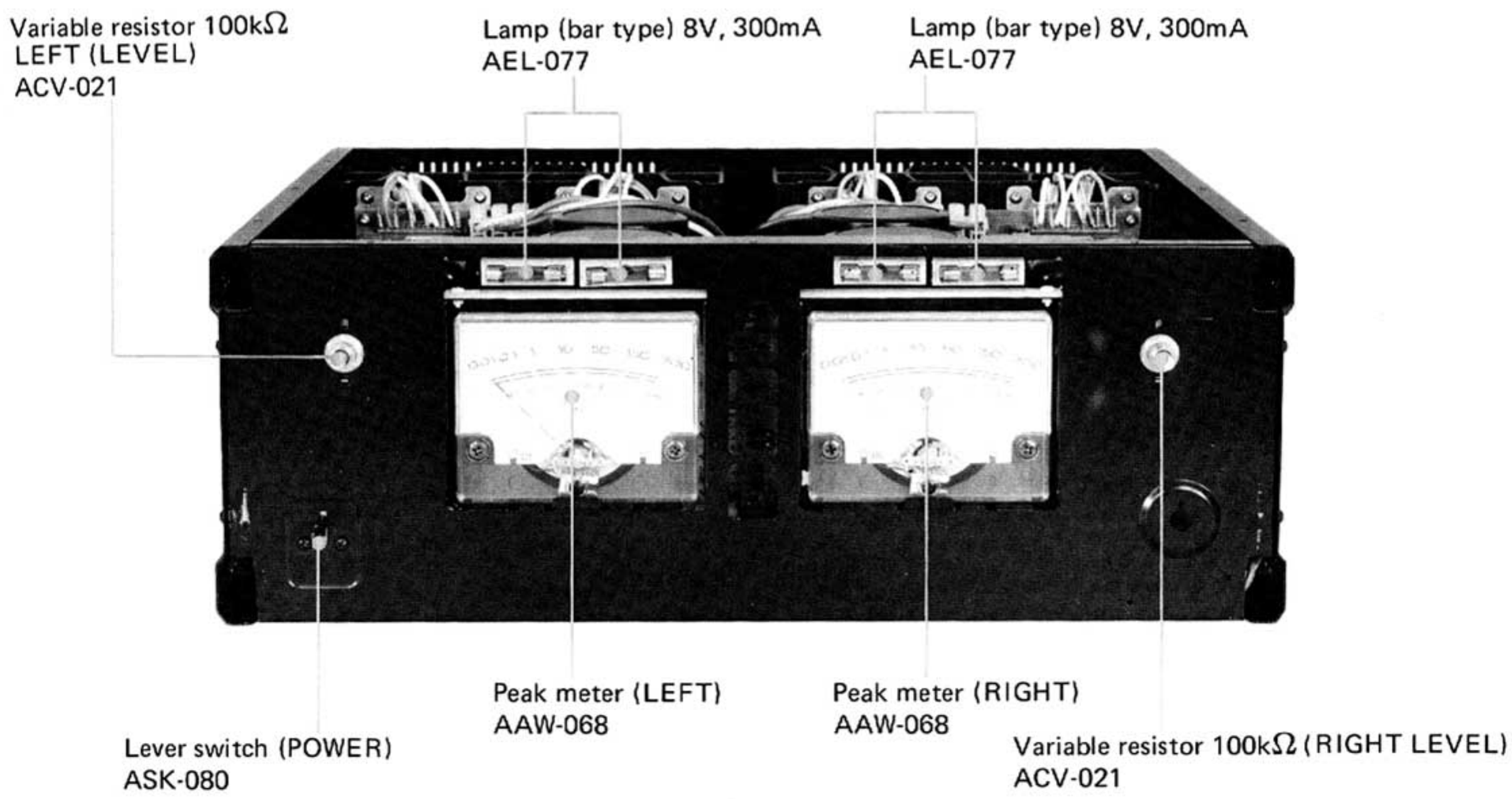

Top View

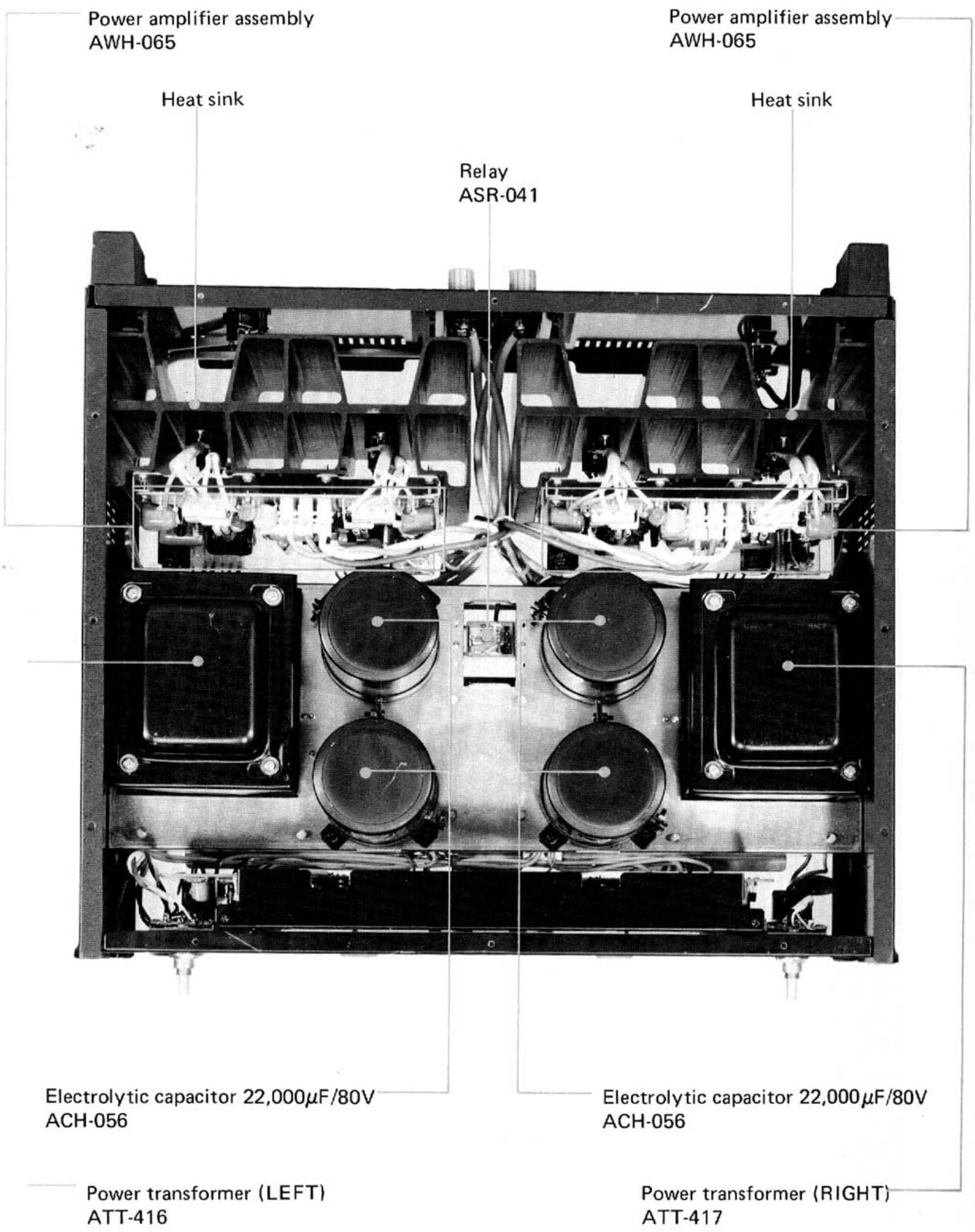
Power amplifier assembly
AWH-065
Power amplifier assembly
AWH-065
Heat sink
Heat sink
Relay
ASR-041
Electrolytic capacitor 22,000μF/80V
ACH-056
Electrolytic capacitor 22,000μF/80V
ACH-056
Power transformer (LEFT)
ATT-416
Power transformer (RIGHT)
ATT-417

Bottom View

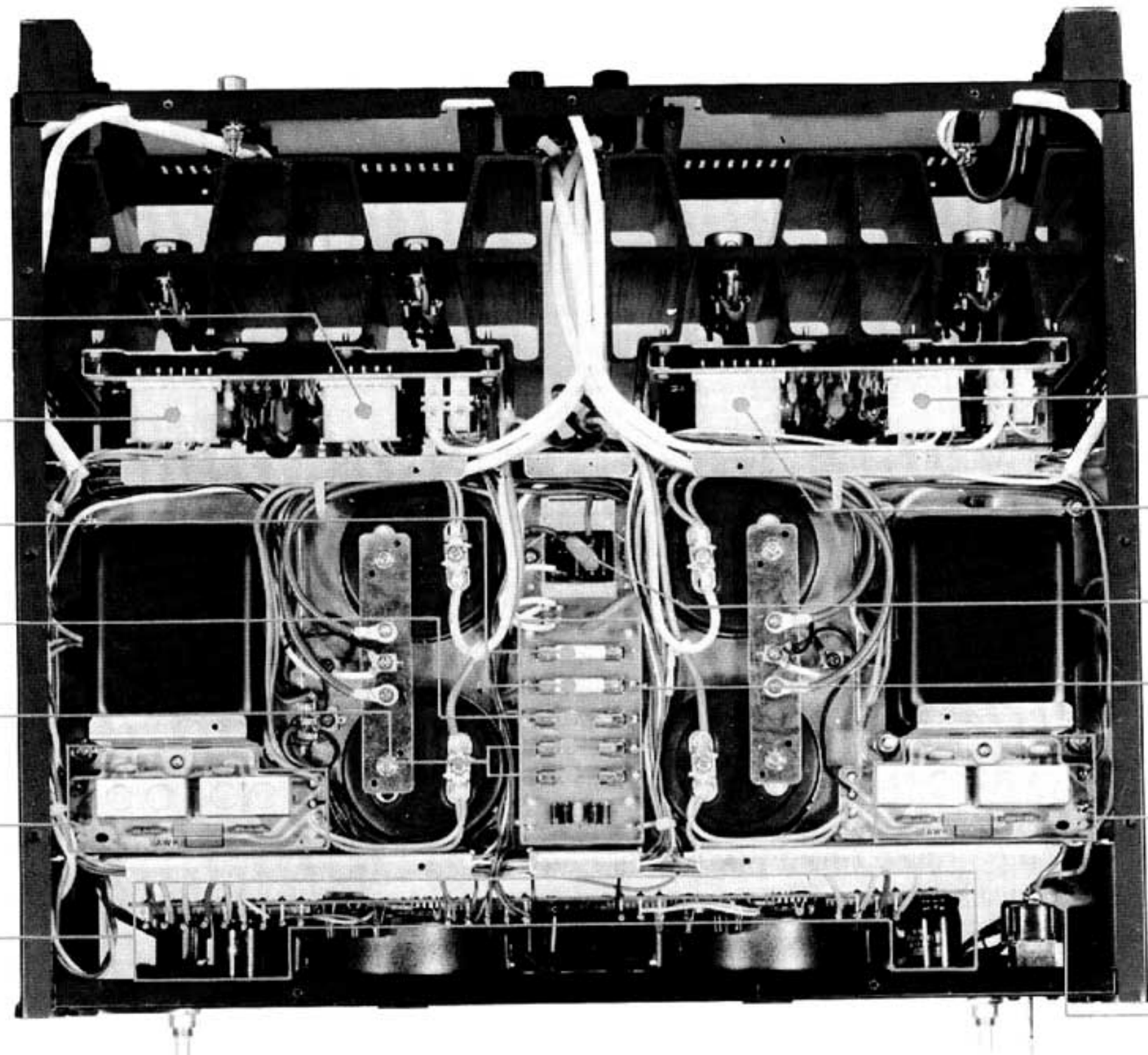

Rear Panel View

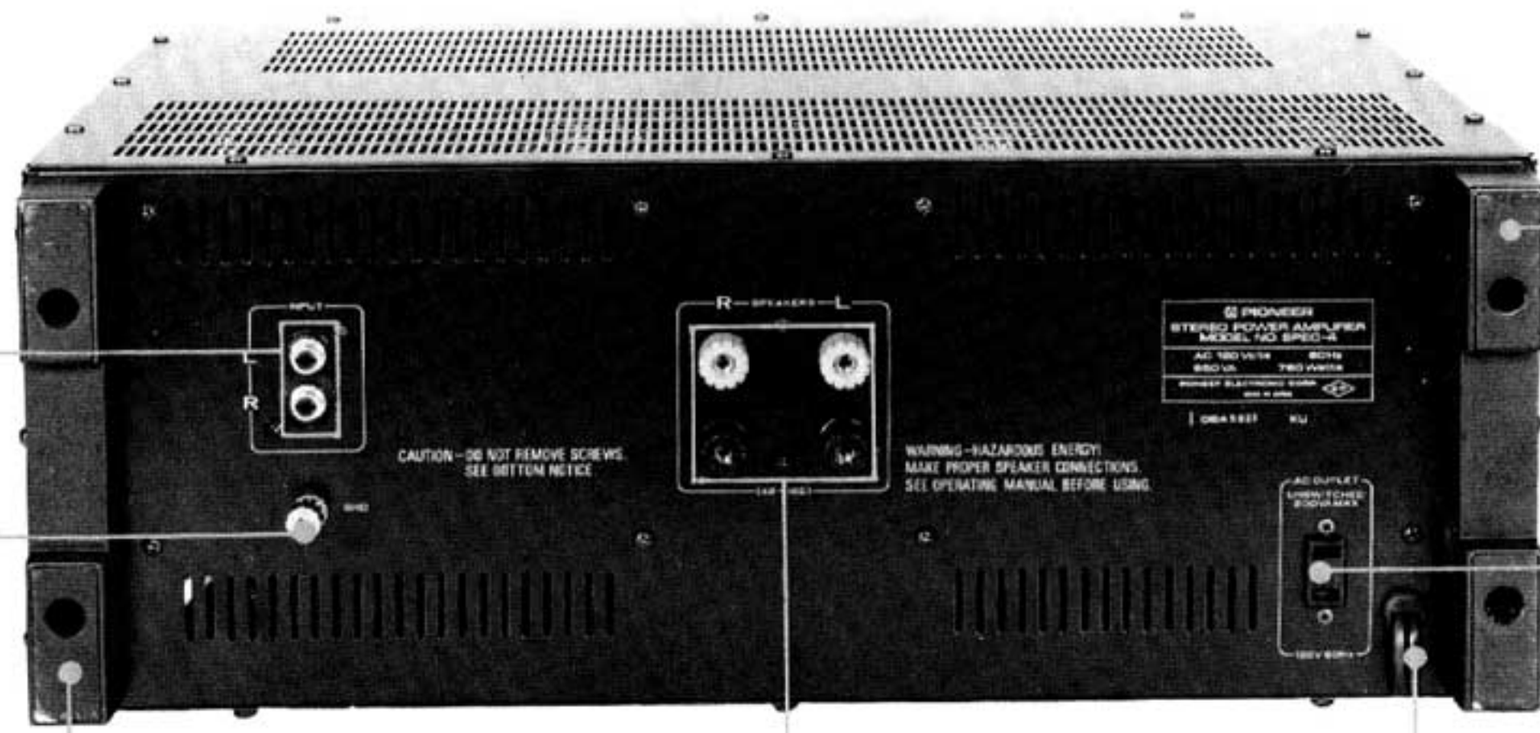

8. ADJUSTMENTS

8.1 POWER AMPLIFIER

DC Balance Adjustment

Do not connect load to speaker output terminals. Set LEVEL control to minimum (fully counter-clockwise).

Adjust VR_1 for 0V at the speaker output terminals (between + and −).

Idle current Adjustment

Do not connect load to speaker output terminals. Set LEVEL control to minimum (fully counter-clockwise).

Adjust VR_2 for 50mV between terminal No. 26 (+) and No. 16 (−). Confirm that 50mV ±10mV appears between terminals No. 25 (+) and No. 17 (−). Readjust after power has been applied for more than 10 minutes.

Power Limiter Adjustment

Connect a 4 ohms resistor and distortion meter, oscilloscope, and AC voltmeter to the speaker output terminals (See Fig. 11). Apply a 1kHz signal to the input terminals and adjust the input signal level for a 200W (28.29V/4Ω) output. At the same time, adjust VR_3, VR_4 for a distortion of 0.03%. VR_4 adjusts the positive half cycle limiter and VR_3 adjusts the negative half cycle. Observe the waveform with the oscilloscope and adjust so that the waveform is symmetrical.

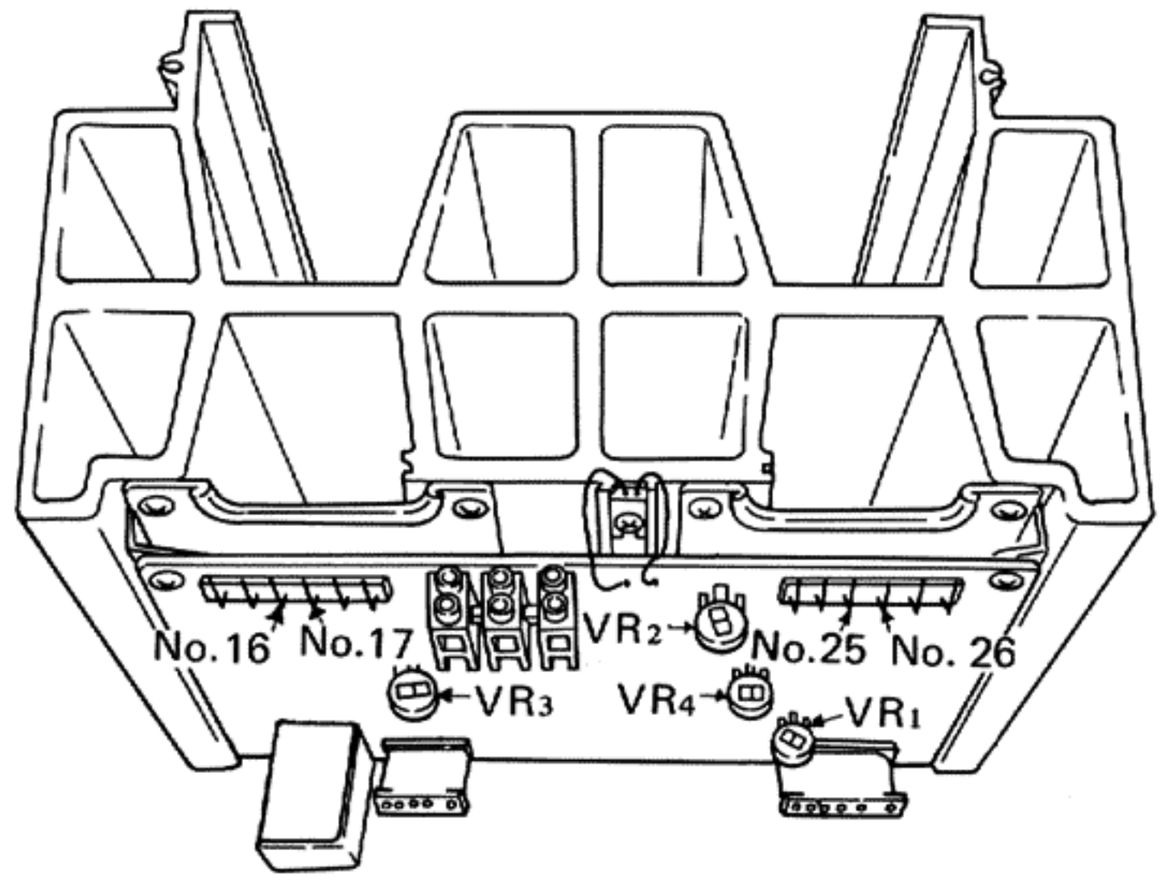

Fig. 10 Power amplifier

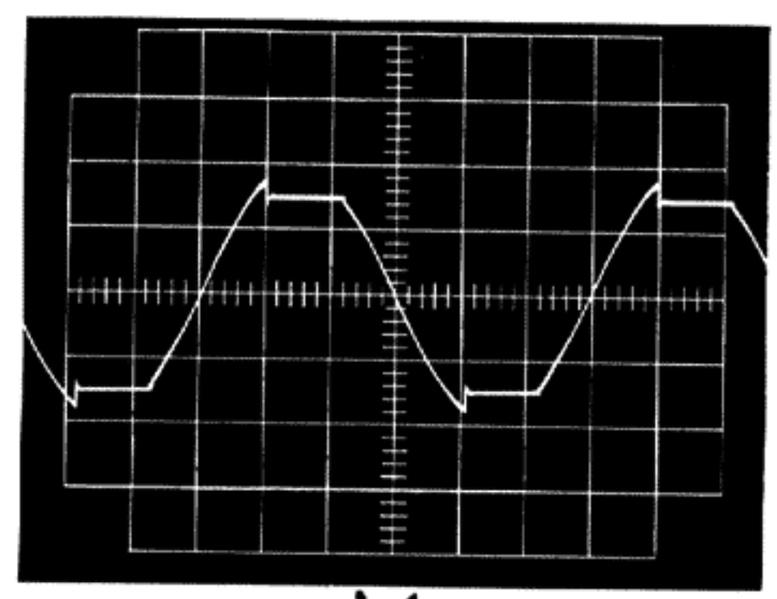

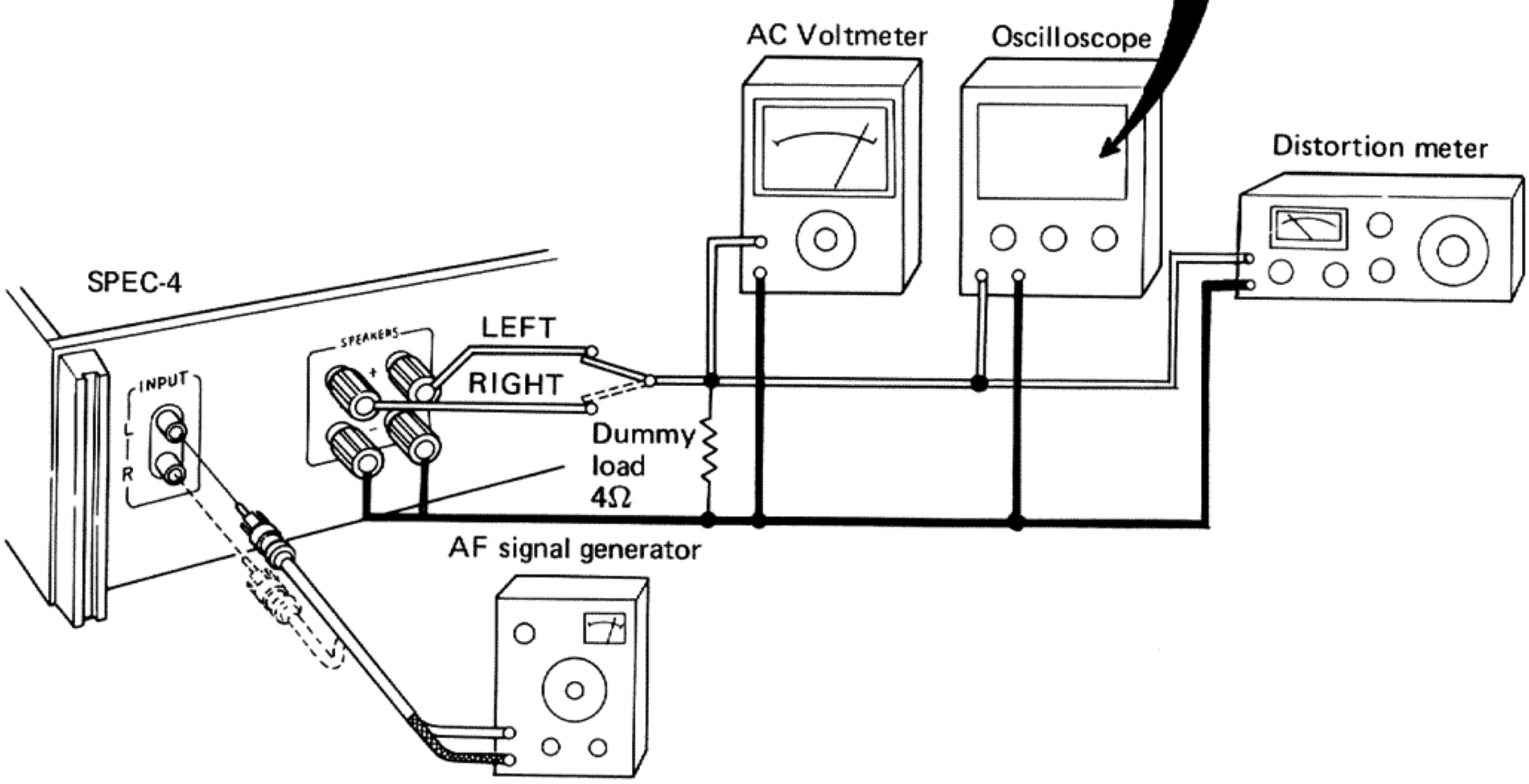

Fig. 11 Connection diagram for power limiter adjustment

8.2 METER AMPLIFIER

Connect an AC voltmeter to the speaker output terminals and apply a 1kHz signal to the input terminals and adjust the input signal level so that the voltmeter indicates 34.64V. At the same time, adjust VR_1 (R channel) and VR_2 (L channel) so that the output meter indicates 0dB.

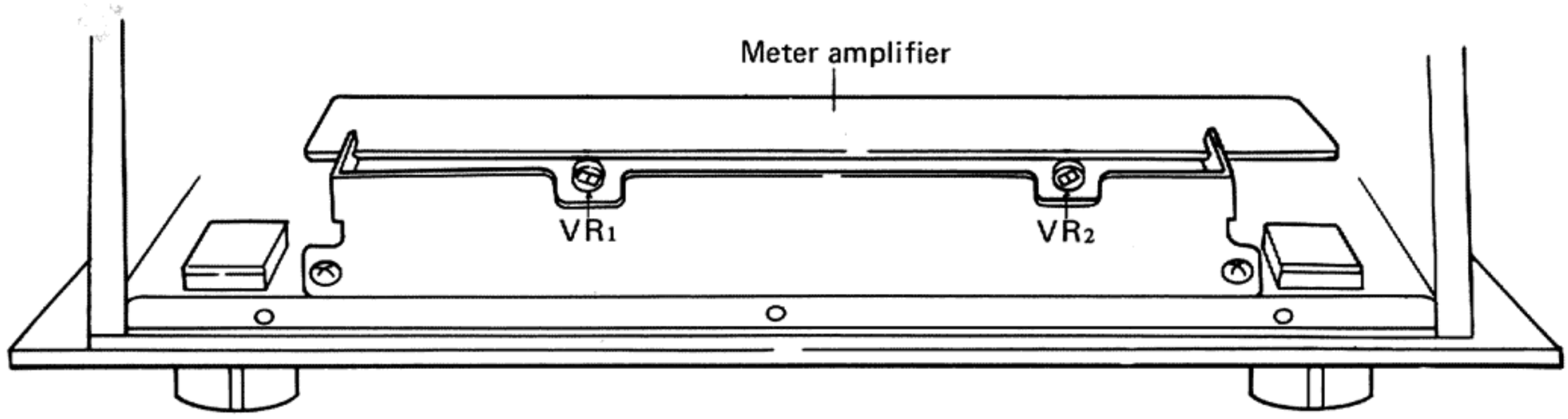

Fig. 12 The position of VR_1 and VR_2

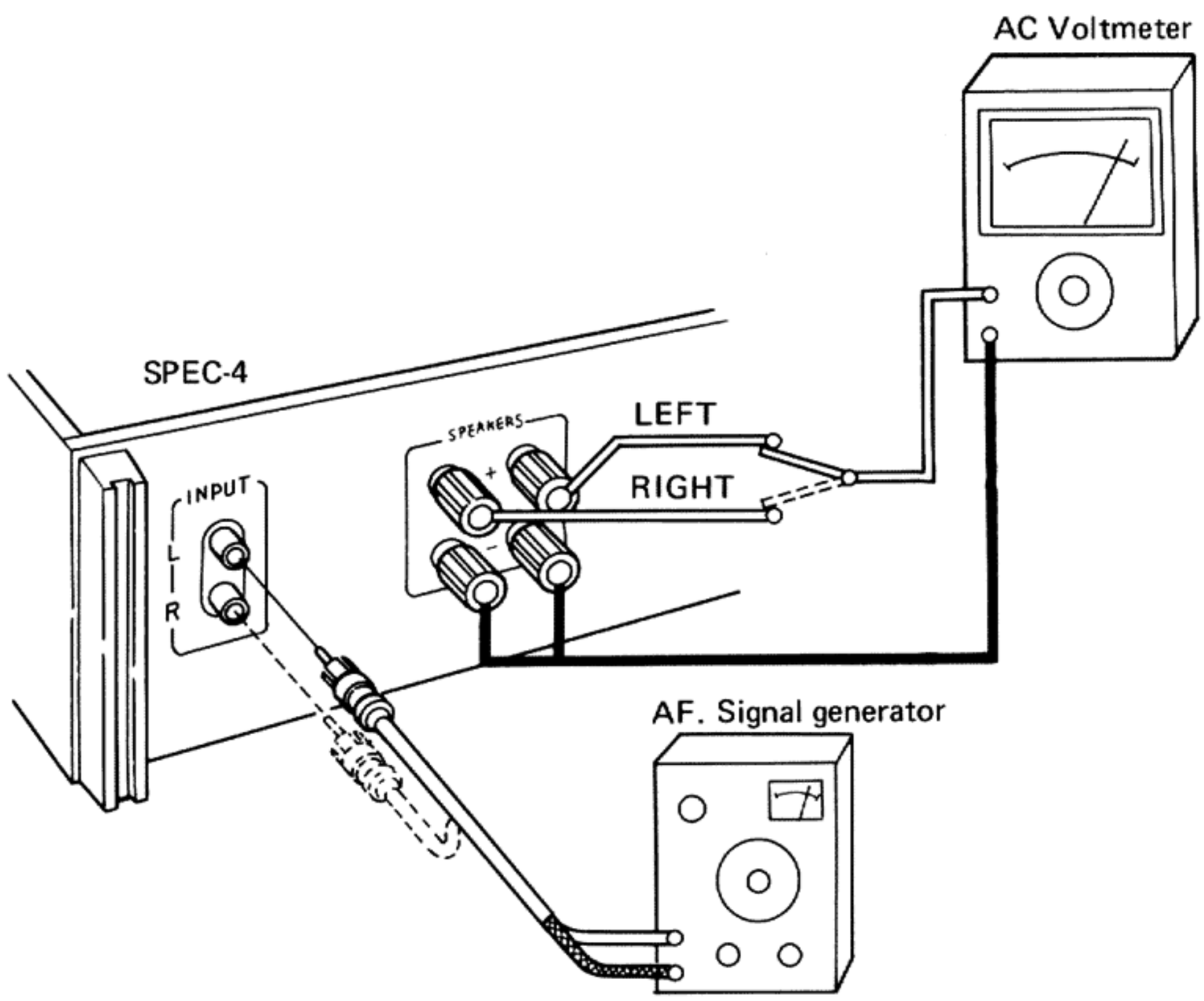

Fig. 13 Connection diagram for meter amplifier adjustment

9. EXPLODED VIEWS

NOMENCLATURE OF SCREWS, WASHERS AND NUTS

The following symbols stand for screws, washers and nuts as shown in exploded view.

Symbol	Description	Shape
RT	Brazier head tapping screw	
PT	Pan head tapping screw	
BT	Binding head tapping screw	
CT	Countersunk head tapping screw	
TT	Truss head tapping screw	
OCT	Oval countersunk head tapping screw	
PM	Pan head machine screw	
CM	Countersunk head machine screw	
OCM	Oval countersunk head machine screw	
TM	Truss head machine screw	
BM	Binding head machine screw	
PSA	Pan head screw with spring lock washer	
PSB	Pan head screw with spring lock washer and flat washer	
PSF	Pan head screw with flat washer	

Symbol	Description	Shape
EW	E type washer	
FW	Flat washer	
SW	Spring lock washer	
N	Nut	
WN	Washer faced nut	
ITW	Internal toothed lock washer	
OTW	Outernal toothed lock washer	
SC	Slotted set screw (Cone point)	
SF	Slotted set screw (Flat point)	
HS	Hexagon socket headless set screw	
OCW	Oval countersunk head wood screw	
CW	Countersunk head wood screw	
RW	Round head wood screw	

EXAMPLE

PM • 3x8

- 8 — length in mm (l)
- 3 — diameter in mm (d)
- PM — Symbol

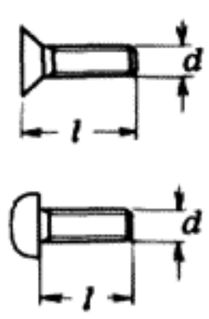

FW • 9ϕx1^{t}

- 1 — thickness in mm (t)
- 9 — diameter in mm (d)
- FW — Symbol

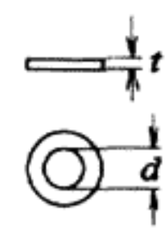

9.1 EXTERNAL PART

NOTE:
Parts indicated in green type cannot be supplied.

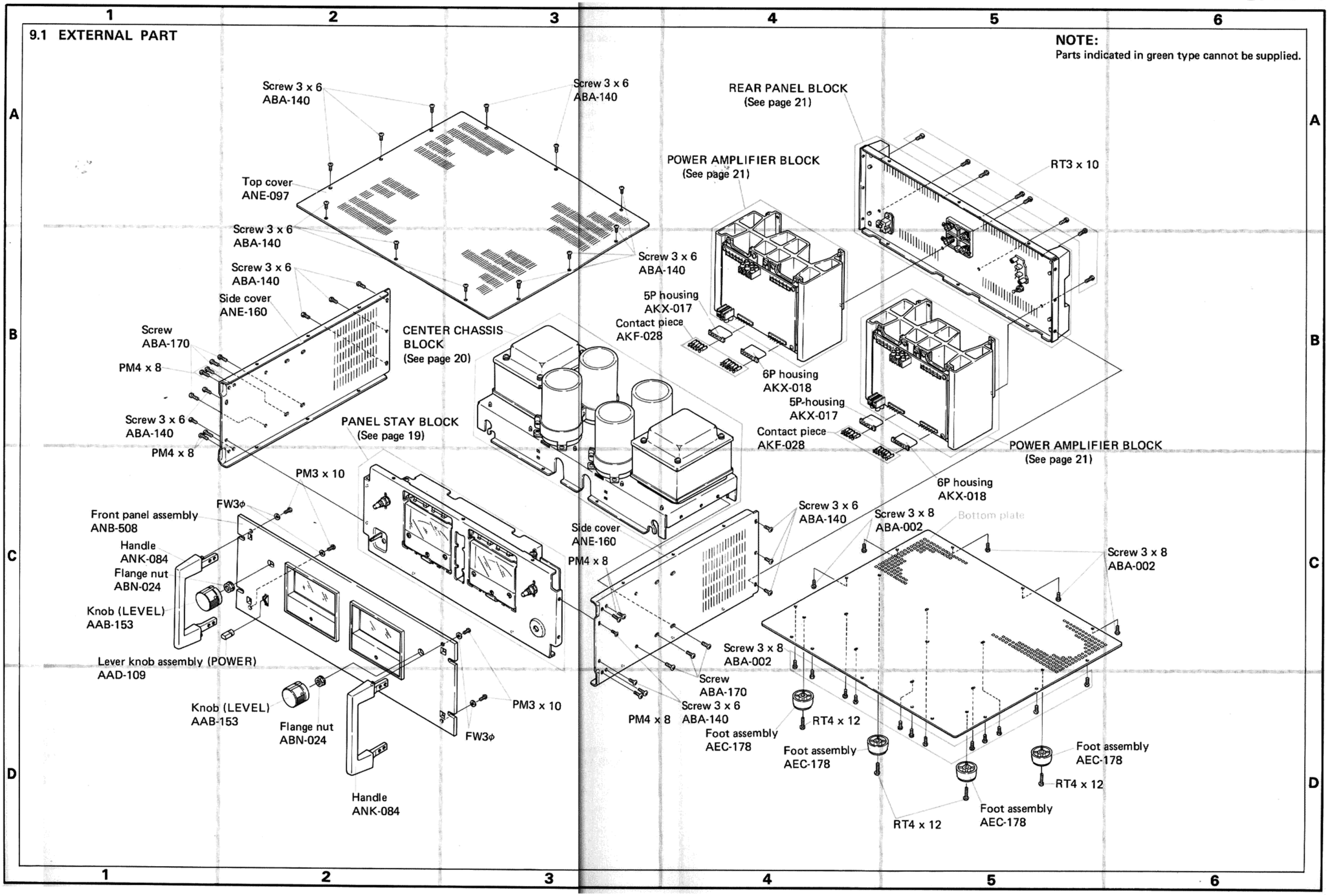

9.2 INTERNAL PART

Panel Stay Block

NOTE:
Parts indicated in green type cannot be supplied.

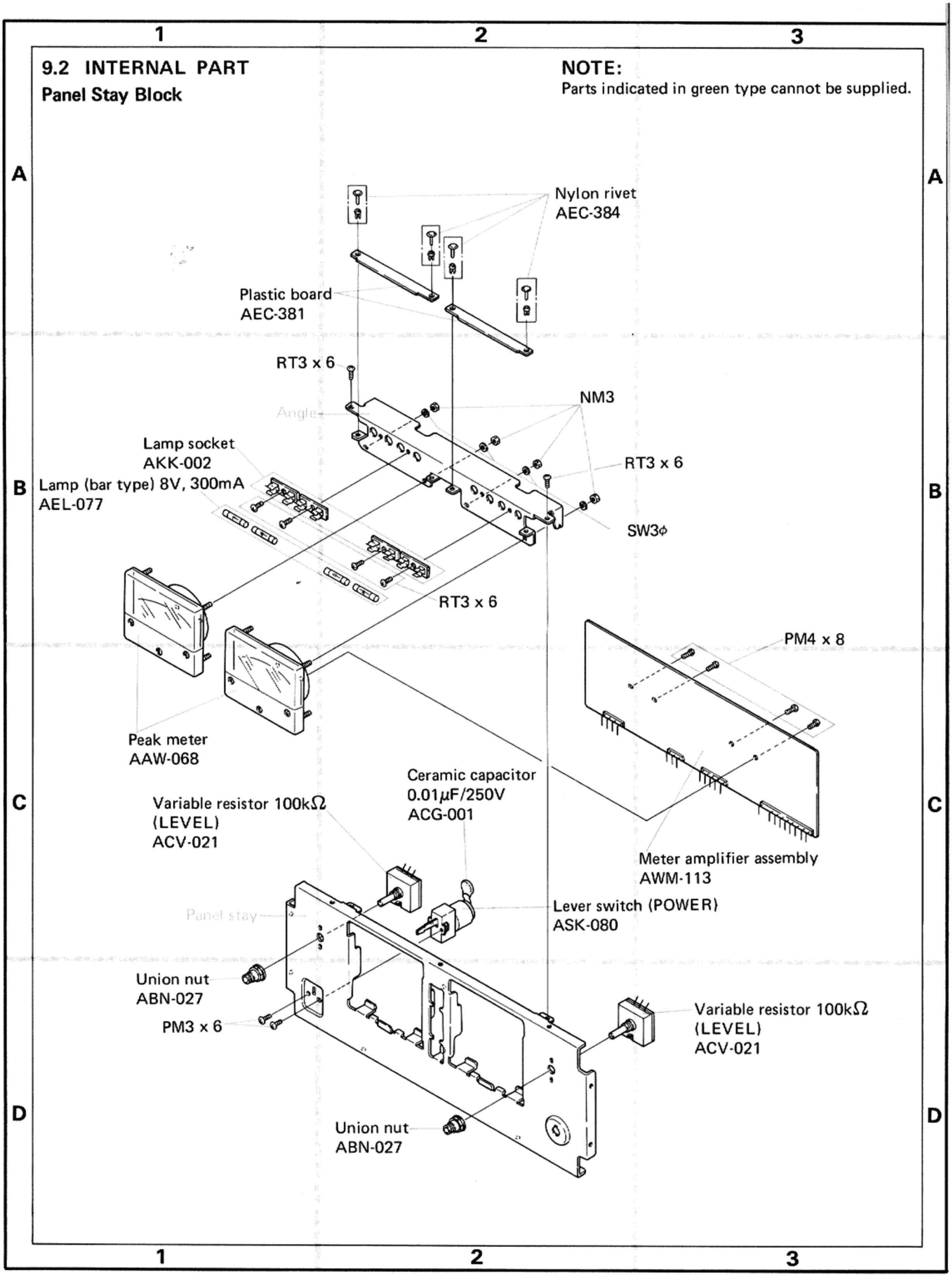

Center Chassis Block

NOTE:
Parts indicated in green type cannot be supplied.

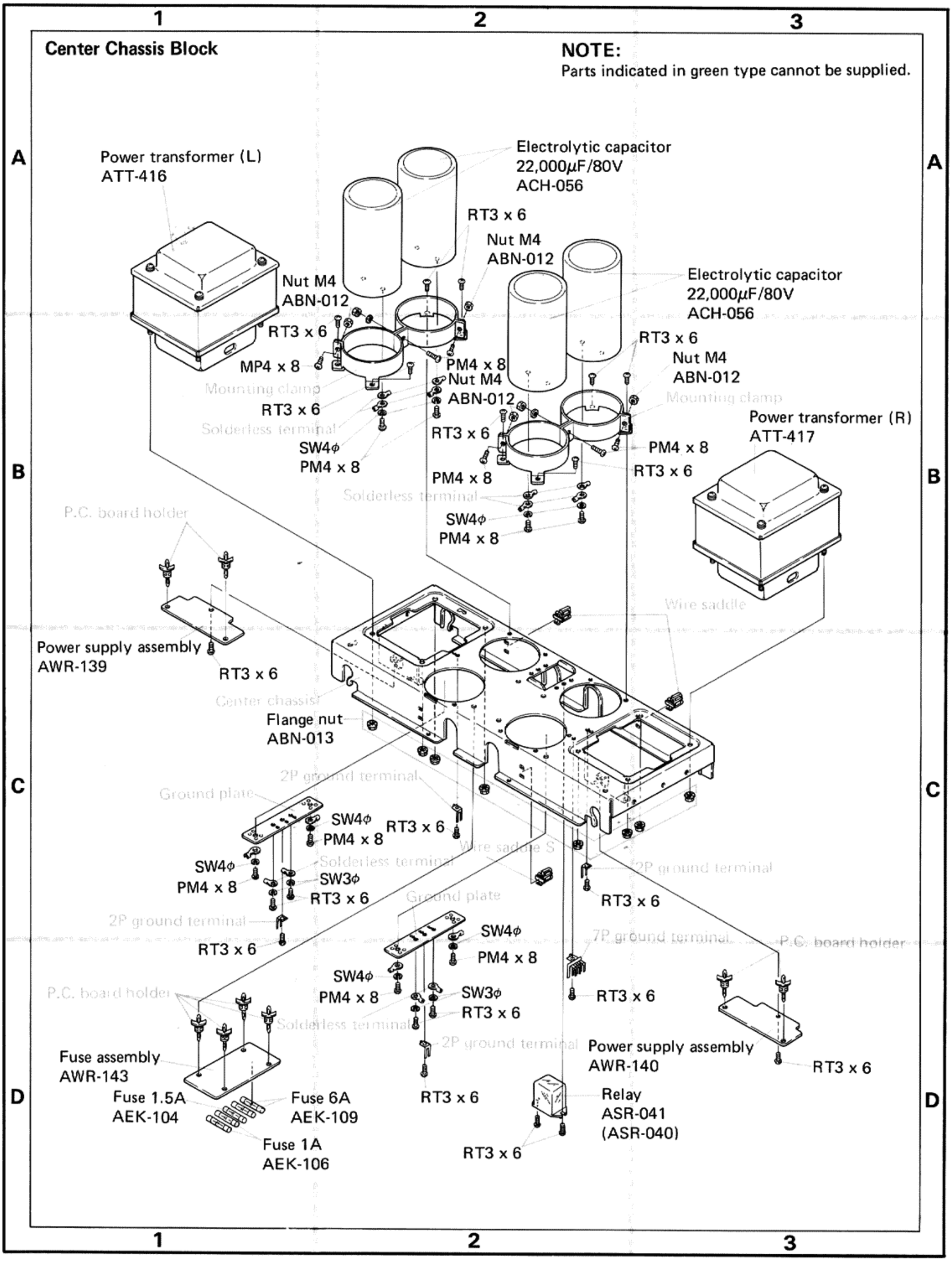

Rear Panel Block

NOTE:
Parts indicated in green type cannot be supplied.

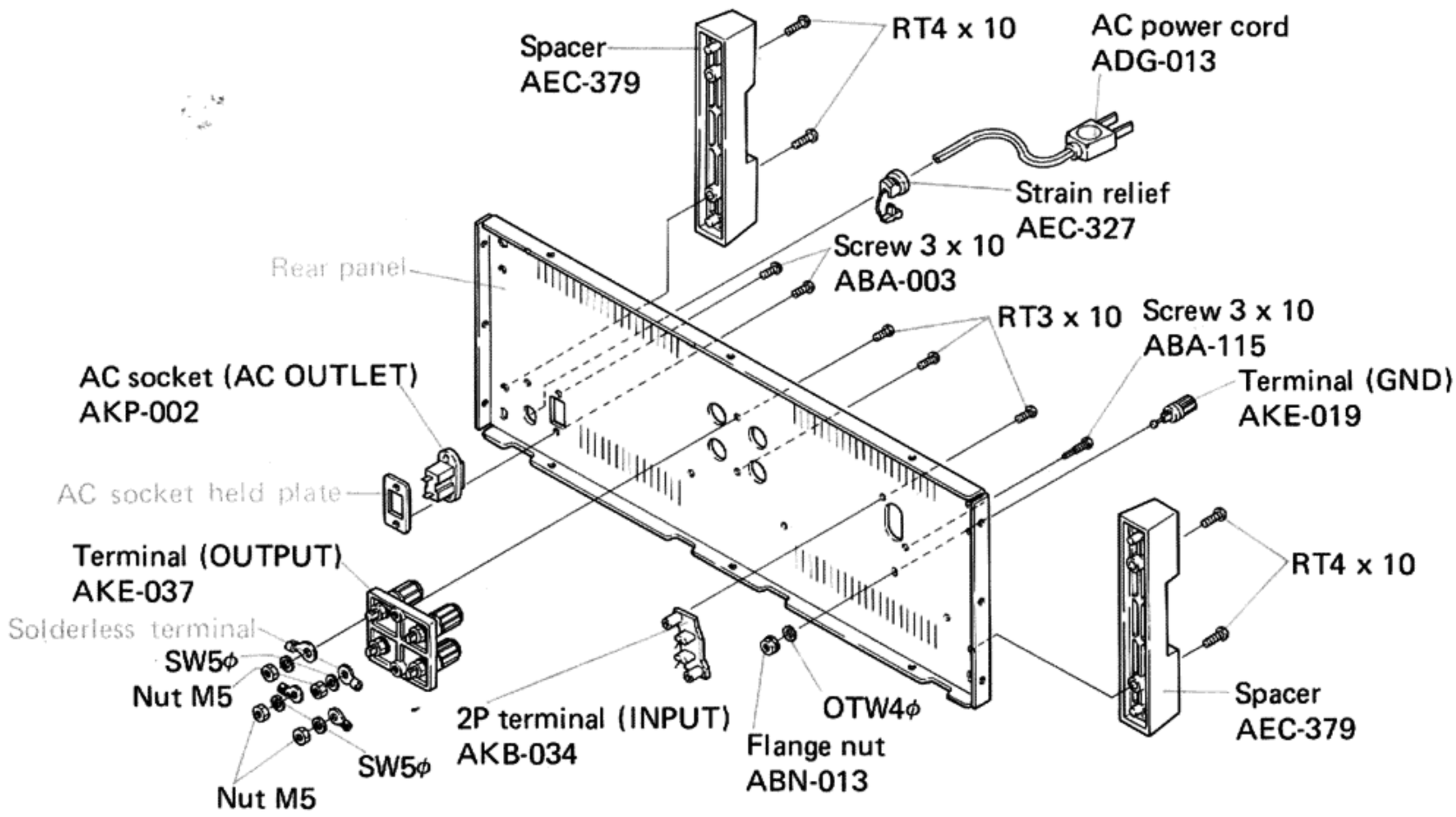

Power Amplifier Block

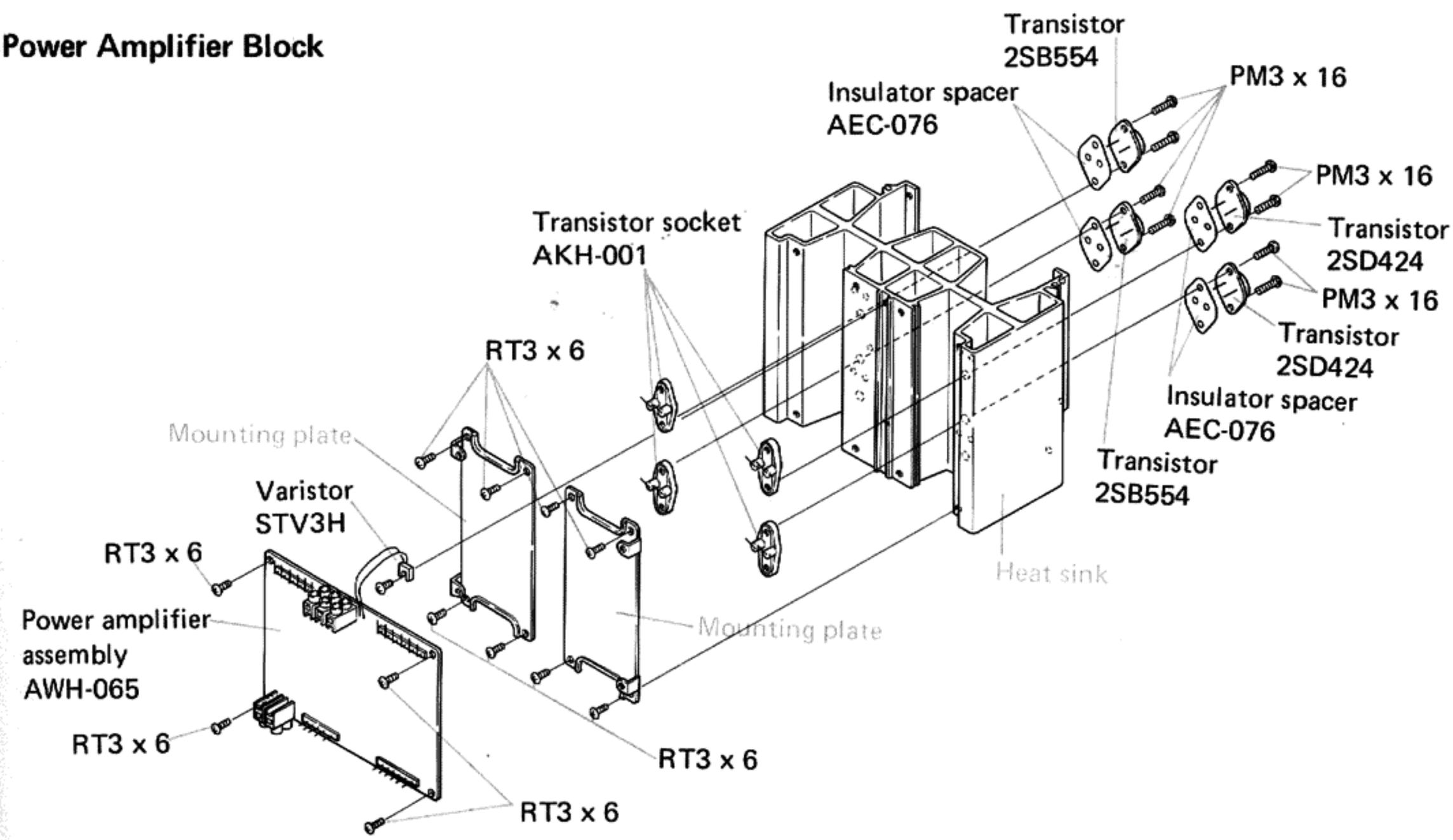

10. SCHEMATIC DIAGRAMS, P. C. BOARD PATTERNS AND PARTS LIST

10.1 SCHEMATIC DIAGRAM AND MISCELLANEOUS PARTS

Miscellaneous Parts List

SWITCHES

Symbol	Description	Part No.
S1	Lever switch (POWER)	ASK-080
S2	Relay	ASR-041

LAMPS AND FUSES

Symbol	Description	Part No.
PL1	Lamp (bar type) 8V, 300mA	AEL-077
PL2	Lamp (bar type) 8V, 300mA	AEL-077
PL3	Lamp (bar type) 8V, 300mA	AEL-077
PL4	Lamp (bar type) 8V, 300mA	AEL-077
FU1	Fuse 6A	AEK-109
FU2	Fuse 6A	AEK-109
FU3	Fuse 1.5A	AEK-104
FU4	Fuse 1A	AEK-106
FU5	Fuse 1A	AEK-106

TRANSFORMERS

Symbol	Description	Part No.
T1	Power transformer (L)	ATT-416
T2	Power transformer (R)	ATT-417

POTENTIOMETERS

Symbol	Description	Part No.
VR1	Variable resistor 100kΩ(LEVEL)	ACV-021
VR2	Variable resistor 100kΩ(LEVEL)	ACV-021

CAPACITORS

Symbol	Description			Part No.
C1	Electrolytic	22,000	80V	ACH-056
C2	Electrolytic	22,000	80V	ACH-056
C3	Electrolytic	22,000	80V	ACH-056
C4	Electrolytic	22,000	80V	ACH-056
C5	Ceramic	0.01	250V	ACG-001
C6	Polypropylene	33p	50V	CQSB 330K 50
C7	Polypropylene	68p	50V	CQSB 680K 50
C8	.....			.....
C9	Ceramic	0.01	250V	ACG-001

NOTE:
- *Capacitors: in μF unless otherwise noted p:pF*
- *Resistors: in Ω, ¼W unless otherwise noted k:kΩ, M:MΩ*

SEMICONDUCTORS

Symbol	Description	Part No.
Q1	Transistor	2SD424-R or O (2SD555-R or S)
Q2	Transistor	2SD424-R or O (2SD555-R or S)
Q3	Transistor	2SB554-R or O (2SB600-R or S)
Q4	Transistor	2SB554-R or O (2SB600-R or S)
Q5	Transistor	2SD424-R or O (2SD555-R or S)
Q6	Transistor	2SD424-R or O (2SD555-R or S)
Q7	Transistor	2SB554-R or O (2SB600-R or S)
Q8	Transistor	2SB554-R or O (2SB600-R or S)

* hfe of these transistors (Q1 ~ Q8) should have the same value.

OTHERS

Symbol	Description	Part No.
	Power amplifier assembly	AWH-065
	Meter amplifier assembly	AWM-113
	Power supply assembly	AWR-139
	Power supply assembly	AWR-140
	Fuse assembly	AWR-143
	Peak meter	AAW-068
	AC socket (AC OUTLET)	AKP-002
	Terminal (OUTPUT)	AKE-037
	2P terminal (INPUT)	AKB-034
	Termmal (GND)	AKE-019
	5P housing	AKX-017
	6P housing	AKX-018
	Contact piece	AKF-028
	AC power cord	ADG-013
	Lamp socket	AKK-002

Schematic Diagram

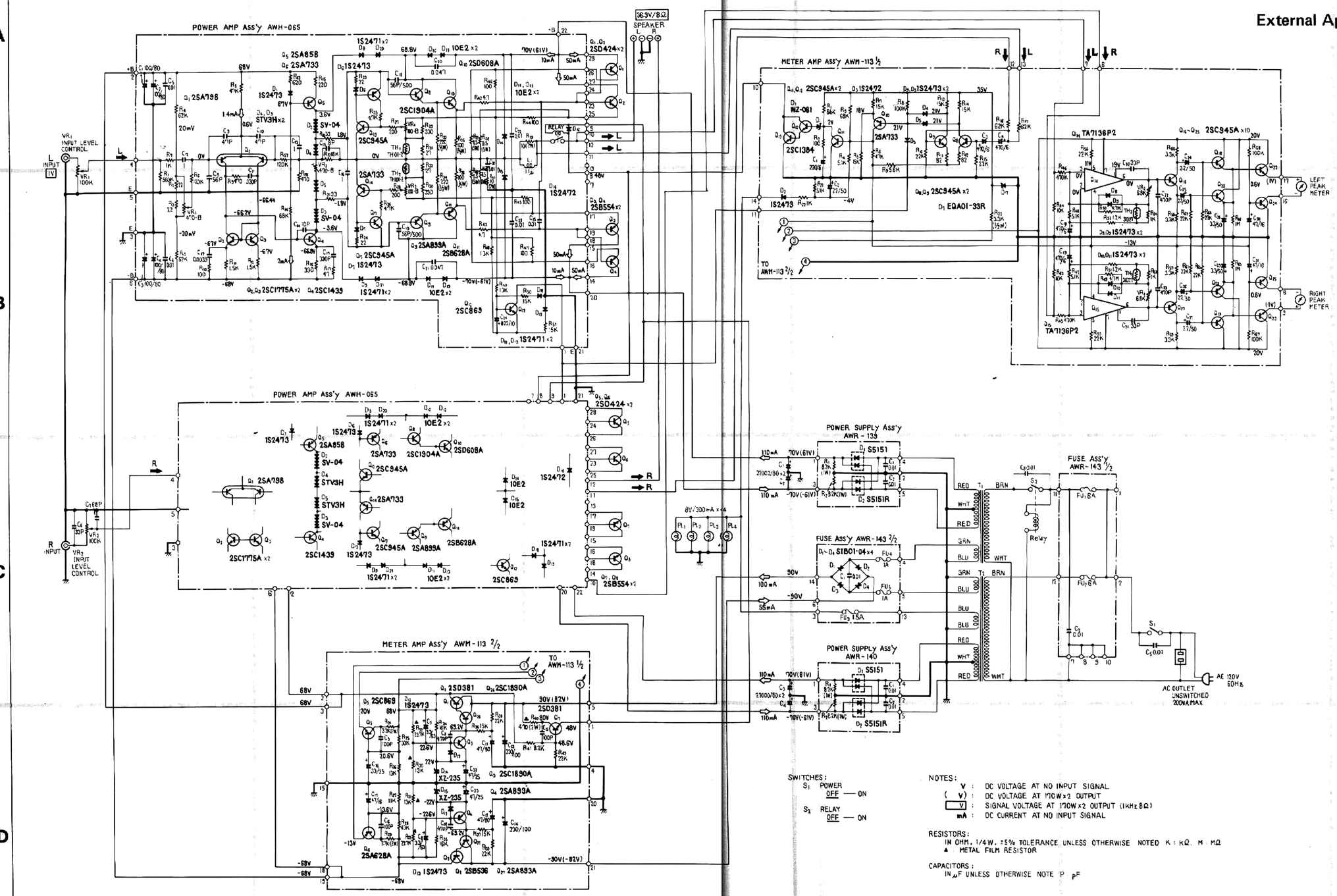

NOTE:
The indicated semiconductors are representative ones only. Other alternative semiconductors may be used and are listed in the parts list.

External Appearance of Transistors and IC

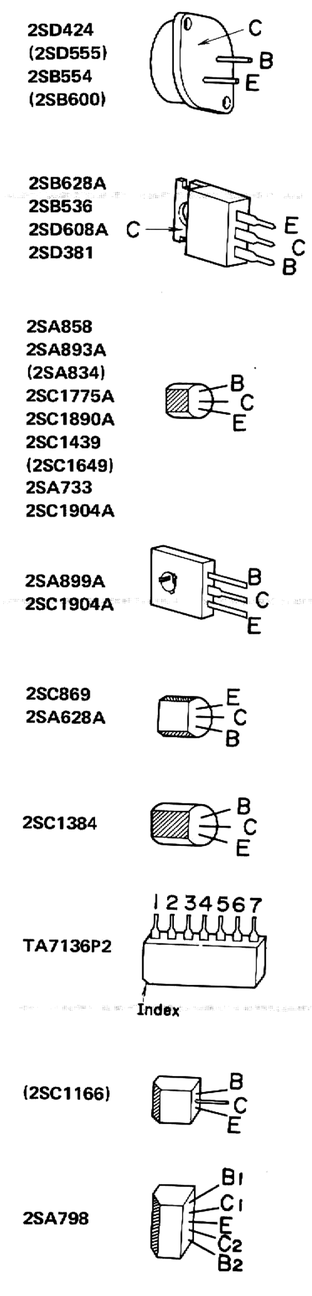

SWITCHES:
S_1 POWER OFF — ON
S_2 RELAY OFF — ON

NOTES:
V : DC VOLTAGE AT NO INPUT SIGNAL
(V) : DC VOLTAGE AT 170W×2 OUTPUT
[V] : SIGNAL VOLTAGE AT 170W×2 OUTPUT (1KHz 8Ω)
mA : DC CURRENT AT NO INPUT SIGNAL

RESISTORS:
IN OHM, 1/4W, ±5% TOLERANCE UNLESS OTHERWISE NOTED K : KΩ, M : MΩ
▲ METAL FILM RESISTOR

CAPACITORS:
IN μF UNLESS OTHERWISE NOTE P pF

Foil side

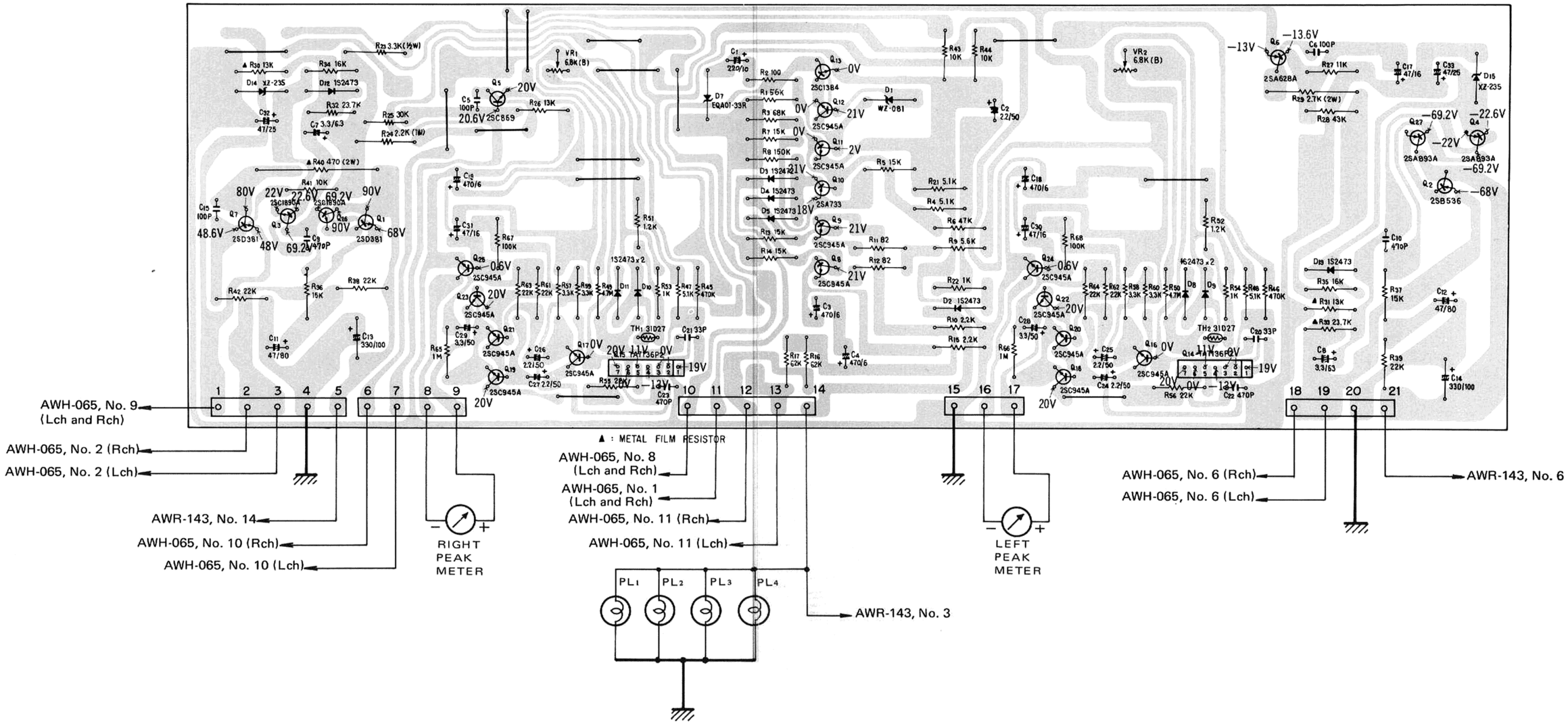
AWH-065, No. 9 (Lch and Rch)
AWH-065, No. 2 (Rch)
AWH-065, No. 2 (Lch)
AWR-143, No. 14
AWH-065, No. 10 (Rch)
AWH-065, No. 10 (Lch)
RIGHT PEAK METER
AWH-065, No. 8 (Lch and Rch)
AWH-065, No. 1 (Lch and Rch)
AWH-065, No. 11 (Rch)
AWH-065, No. 11 (Lch)
PL1
PL2
PL3
PL4
AWR-143, No. 3
LEFT PEAK METER
AWH-065, No. 6 (Rch)
AWH-065, No. 6 (Lch)
AWR-143, No. 6
▲ : METAL FILM RESISTOR

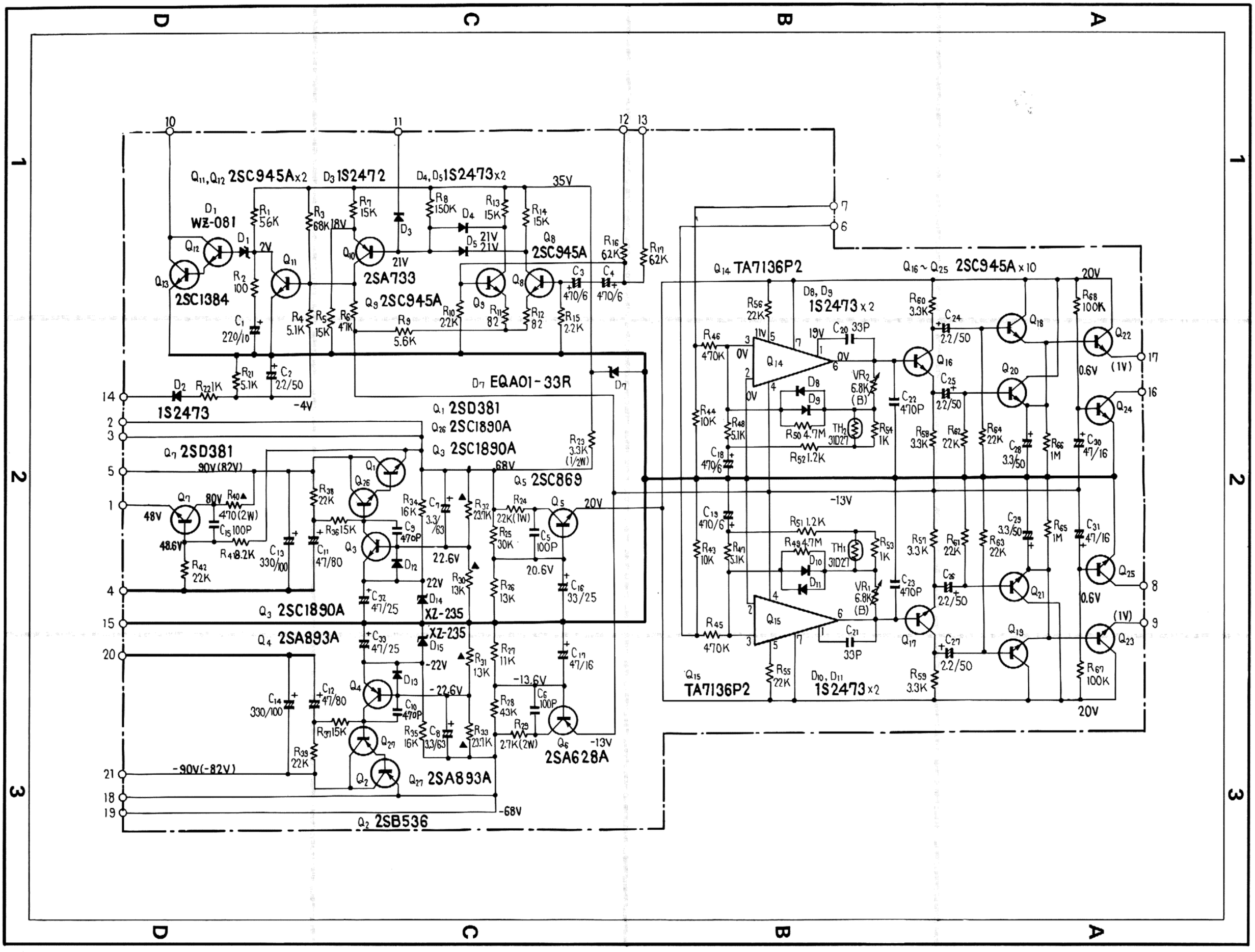
Q11, Q12 2SC945A x2
D3 1S2472
D4, D5 1S2473 x2
D1 WZ-081
Q13 2SC1384
Q10 2SA733
Q9 2SC945A
Q8 2SC945A
D2 1S2473
D7 EQA01-33R
Q1 2SD381
Q26 2SC1890A
Q3 2SC1890A
Q7 2SD381
Q5 2SC869
Q4 2SA893A
Q27 2SA628A
Q2 2SB536
XZ-235
Q14 TA7136P2
Q15 TA7136P2
Q16 ~ Q25 2SC945A x10
D8, D9 1S2473 x2
D10, D11 1S2473 x2
TH1 31D27
TH2 31D27
VR1 6.8K (B)
VR2 6.8K (B)
-4V
-90V(-82V)
-68V
-13V
20V
35V

Parts List of Meter Amplifier Assembly (AWM-113)

RESISTORS

Symbol	Description			Part No.
VR1	Semi-fixed	6.8k-B		ACP-060
VR2	Semi-fixed	6.8k-B		ACP-060
R1	Carbon film	56k		RD¼PS 563J
R2	Carbon film	100		RD¼PS 101J
R3	Carbon film	68k		RD¼PS 683J
R4	Carbon film	5.1k		RD¼PS 512J
R5	Carbon film	15k		RD¼PS 153J
R6	Carbon film	47k		RD¼PS 473J
R7	Carbon film	15k		RD¼PS 153J
R8	Carbon film	150k		RD¼PS 154J
R9	Carbon film	5.6k		RD¼PS 562J
R10	Carbon film	2.2k		RD¼PS 222J
R11	Carbon film	82		RD¼PS 820J
R12	Carbon film	82		RD¼PS 820J
R13	Carbon film	15k		RD¼PS 153J
R14	Carbon film	15k		RD¼PS 153J
R15	Carbon film	2.2k		RD¼PS 222J
R16	Carbon film	62k		RD¼PS 623J
R17	Carbon film	62k		RD¼PS 623J
R21	Carbon film	5.1k		RD¼PS 512J
R22	Carbon film	1k		RD¼PS 102J
R23	Carbon film	3.3k	½W	RD½PSF 332J
R24	Metal oxide	2.2k	1W	RS1P 222J
R25	Carbon film	30k		RD¼PS 303J
R26	Carbon film	13k		RD¼PS 133J
R27	Carbon film	11k		RD¼PS 113J
R28	Carbon film	43k		RD¼PS 433J
R29	Metal oxide	2.7k	2W	RS2P 272J
R30	Metal film	13k	1/5W	RN1/5SQ 1302F
R31	Metal film	13k	1/5W	RN1/5SQ 1302F
R32	Metal film	23.7k	1/5W	RN1/5SQ 2372F
R33	Metal film	23.7k	1/5W	RN1/5SQ 2372F
R34	Carbon film	16k		RD¼PS 163J
R35	Carbon film	16k		RD¼PS 163J
R36	Carbon film	15k		RD¼PS 153J
R37	Carbon film	15k		RD¼PS 153J
R38	Carbon film	22k		RD¼PS 223J
R39	Carbon film	22k		RD¼PS 223J
R40	Metal oxide	470	2W	RS2P 471J
R41	Carbon film	8.2k		RD¼PS 822J
R42	Carbon film	22k		RD¼PS 223J
R43	Carbon film	10k		RD¼PS 103J
R44	Carbon film	10k		RD¼PS 103J
R45	Carbon film	470k		RD¼PS 474J
R46	Carbon film	470k		RD¼PS 474J
R47	Carbon film	5.1k		RD¼PS 512J
R48	Carbon film	5.1k		RD¼PS 512J

Symbol	Description		Part No.
R49	Carbon film	4.7M	RD¼PS 475J
R50	Carbon film	4.7M	RD¼PS 475J
R51	Carbon film	1.2k	RD¼PS 122J
R52	Carbon film	1.2k	RD¼PS 122J
R53	Carbon film	1k	RD¼PS 102J
R54	Carbon film	1k	RD¼PS 102J
R55	Carbon film	22k	RD¼PS 223J
R56	Carbon film	22k	RD¼PS 223J
R57	Carbon film	3.3k	RD¼PS 332J
R58	Carbon film	3.3k	RD¼PS 332J
R59	Carbon film	3.3k	RD¼PS 332J
R60	Carbon film	3.3k	RD¼PS 332J
R61	Carbon film	22k	RD¼PS 223J
R62	Carbon film	22k	RD¼PS 223J
R63	Carbon film	22k	RD¼PS 223J
R64	Carbon film	22k	RD¼PS 223J
R65	Carbon film	1M	RD¼PS 105J
R66	Carbon film	1M	RD¼PS 105J
R67	Carbon film	100k	RD¼PS 104J
R68	Carbon film	100k	RD¼PS 104J

CAPACITORS

Symbol	Description			Part No.
C1	Electrolytic	220	10V	CEA 221P 10
C2	Electrolytic	2.2	50V	ACH-317
C3	Electrolytic	470	6V	CEA 471P 6
C4	Electrolytic	470	6V	CEA 471P 6
C5	Ceramic	100p	50V	CCDSL 101K 50
C6	Ceramic	100p	50V	CCDSL 101K 50
C7	Electrolytic	3.3	63V	CEA 3R3P 63
C8	Electrolytic	3.3	63V	CEA 3R3P 63
C9	Ceramic	470p	50V	CKDYB 471K 50
C10	Ceramic	470p	50V	CKDYB 471K 50
C11	Electrolytic	47	80V	CEA 470P 80
C12	Electrolytic	47	80V	CEA 470P 80
C13	Electrolytic	330	100V	ACH-076
C14	Electrolytic	330	100V	ACH-076
C15	Ceramic	100p	50V	CCDSL 101K 50
C16	Electrolytic	33	25V	CEA 330P 25
C17	Electrolytic	47	16V	CEA 470P 16
C18	Electrolytic	470	6V	CEA 471P 6
C19	Electrolytic	470	6V	CEA 471P 6
C20	Ceramic	33p	50V	CCDSL 330K 50
C21	Ceramic	33p	50V	CCDSL 330K 50
C22	Ceramic	470p	50V	CKDYB 471K 50
C23	Ceramic	470p	50V	CKDYB 471K 50
C24	Electrolytic	2.2	50V	CEA 2R2P 50
C25	Electrolytic	2.2	50V	CEA 2R2P 50

Symbol	Description			Part No.
C26	Electrolytic	2.2	50V	CEA 2R2P 50
C27	Electrolytic	2.2	50V	CEA 2R2P 50
C28	Electrolytic	3.3	50V	CEA 3R3P 50
C29	Electrolytic	3.3	50V	CEA 3R3P 50
C30	Electrolytic	47	16V	CEA 470P 16
C31	Electrolytic	47	16V	CEA 470P 16
C32	Electrolytic	47	25V	CEA 470P 25
C33	Electrolytic	47	25V	CEA 470P 25

SEMICONDUCTORS

Symbol	Description	Part No.
Q1	Transistor	2SD381-N (2SD381-M) (2SD381-L)
Q2	Transistor	2SB536-N (2SB536-M) (2SB536-L)
Q3	Transistor	2SC1890A-E (2SC1890A-F) (2SC869-D) (2SC869-C)
Q4	Transistor	2SA893A-D (2SA893A-E) (2SA628A-D) (2SA628A-C)
Q5	Transistor	2SC869-D (2SC869-C) (2SC1649-N) (2SC1649-M)
Q6	Transistor	2SA628A-D (2SA628A-C) (2SA834-N) (2SA834-M)
Q7	Transistor	2SD381-L
Q8	Transistor	2SC945A-Q (2SC945A-R)
Q9	Transistor	2SC945A-Q (2SC945A-R)
Q10	Transistor	2SA733-Q (2SA733-R)
Q11	Transistor	2SC945A-Q (2SC945A-R)
Q12	Transistor	2SC945A-Q (2SC945A-R)

* hfe of these transistors (Q8, Q9, Q11, Q12) should have the same value.

Symbol	Description	Part No.
Q13	Transistor	2SC1384-R (2SC1384-Q) (2SC1166-Y) (2SC1166-O)
Q14	IC	TA7136P2
Q15	IC	TA7136P2
Q16	Transistor	2SC945A-Q (2SC945A-R)
Q17	Transistor	2SC945A-Q (2SC945A-R)
Q18	Transistor	2SC945A-Q (2SC945A-R)
Q19	Transistor	2SC945A-Q (2SC945A-R)
Q20	Transistor	2SC945A-Q (2SC945A-R)
Q21	Transistor	2SC945A-Q (2SC945A-R)
Q22	Transistor	2SC945A-Q (2SC945A-R)
Q23	Transistor	2SC945A-Q (2SC945A-R)
Q24	Transistor	2SC945A-Q (2SC945A-R)
Q25	Transistor	2SC945A-Q (2SC945A-R)
Q26	Transistor	2SC1890A-E (2SC1890A-F) (2SC869-D) (2SC869-C)
Q27	Transistor	2SA893A-D (2SA893A-E) (2SA628A-D) (2SA628A-C)
D1	Zener diode	WZ-081
D2	Diode	1S2473 (1S1555)
D3	Diode	1S2472 (1S1554)
D4	Diode	1S2473 (1S1555)
D5	Diode	1S2473 (1S1555)
D7	Diode	EQA01-33R (1S1554)
D8	Diode	1S2473 (1S1555)
D9	Diode	1S2473 (1S1555)
D10	Diode	1S2473 (1S1555)
D11	Diode	1S2473 (1S1555)

Meter amplifier assembly (AWM-113)

Symbol	Description	Part No.
D12	Diode	1S2473 (1S1555)
D13	Diode	1S2473 (1S1555)
D14	Zener diode	XZ-235
D15	Zener diode	XZ-235
TH1	Thermistor	31D27
TH2	Thermistor	31D27

OTHER

Symbol	Description	Part No.
	Heat sink	ANH-117

List of Changed Parts for Ractory Modification

Symbol	Description	Part No.

Meter amplifier assembly (AWM-113)

10.3 POWER AMPLIFIER ASSEMBLY (AWH-065)

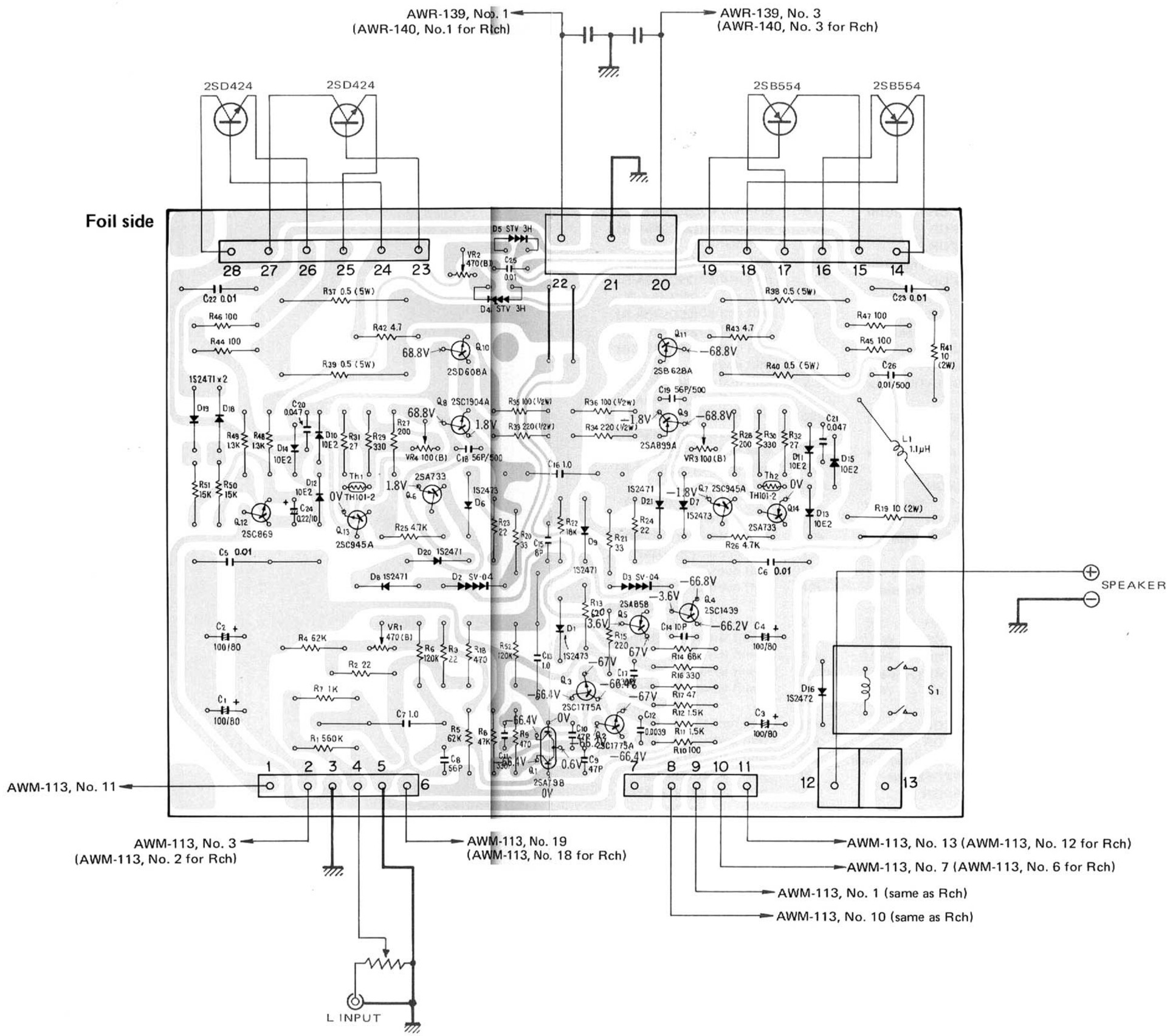

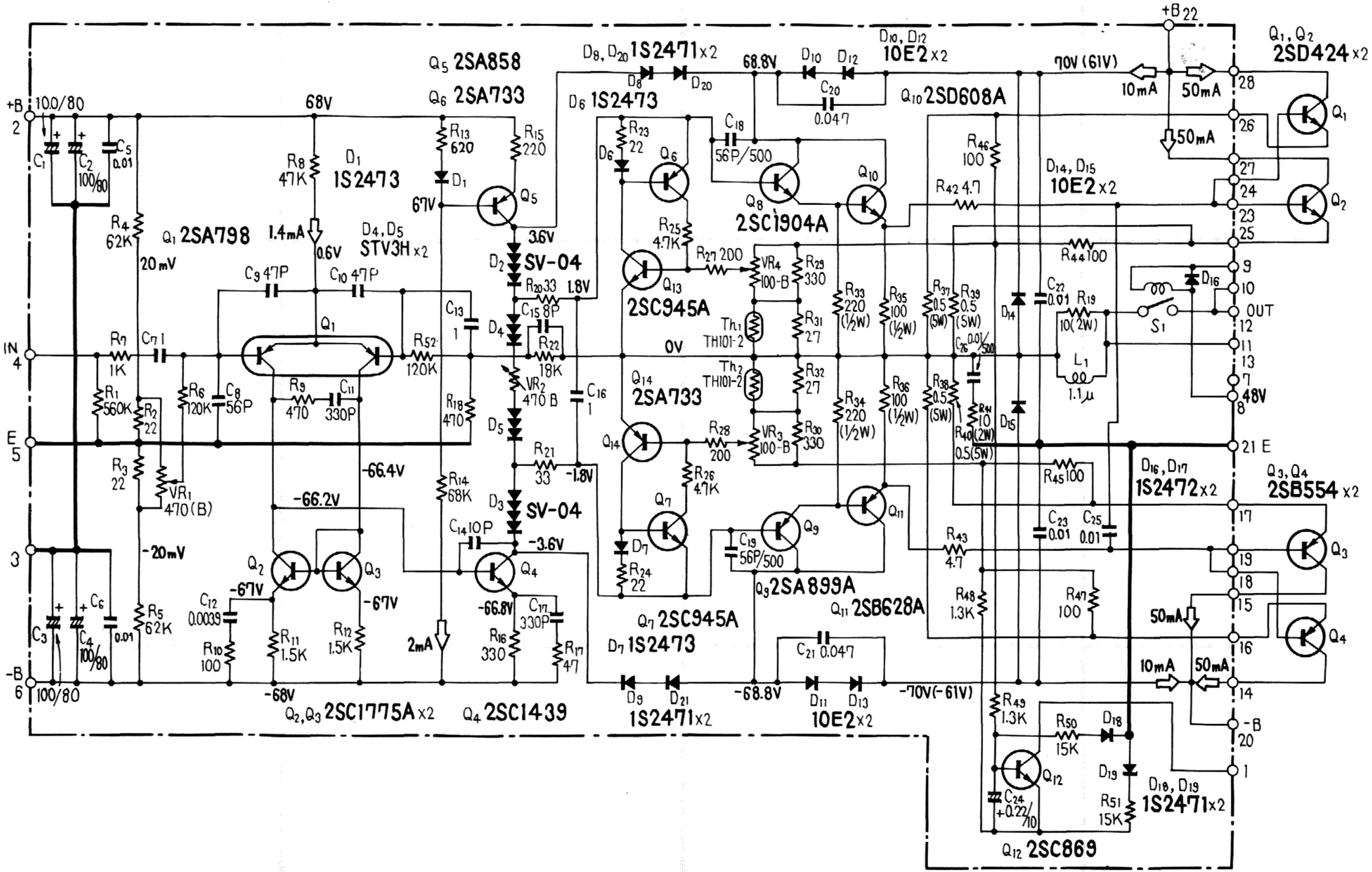
+B 22
Q1, Q2 2SD424 x2
D10, D12 10E2 x2
D8, D20 1S2471 x2
Q5 2SA858
Q6 2SA733
D6 1S2473
Q10 2SD608A
70V (61V)
10mA
50mA
150mA
+B 2
100/80
68V
68.8V
D14, D15 10E2 x2
R8 47K
D1 1S2473
R13 620
R15 220
R46 100
R42 4.7
Q8 2SC1904A
R4 62K
Q1 2SA798
1.4mA
0.6V
D4, D5 STV3H x2
3.6V
D2 SV-04
R25 4.7K
R27 200
VR4 100-B
R29 330
R44 100
20mV
C9 47P
C10 47P
R20 33
1.8V
Q13 2SC945A
R33 220 (1/2W)
R35 100 (1/2W)
R37 0.5 (5W)
R39 0.5 (5W)
C22 0.01
R19 10 (2W)
D16
S1
OUT
IN 4
R7 1K
C7 1
Q1
R52 120K
C13 1
C15 8P
R22 18K
Th1 TH101-2
31 27
0V
R32 27
Th2 TH101-2
R36 100 (1/2W)
R38 0.5 (5W)
C26 0.01/500
L1 1.1μ
48V
R1 560K
R2 22
R6 120K
C8 56P
R9 470
C11 330P
R18 470
VR2 470 B
C16 1
Q14 2SA733
R34 220 (1/2W)
R40 10 (2W)
R41 0.5 (5W)
D15
E 5
R28 200
VR3 100-B
R30 330
21 E
R3 22
VR1 470 (B)
-66.4V
R14 68K
R21 33
-1.8V
R26 4.7K
R45 100
D16, D17 1S2472 x2
Q3, Q4 2SB554 x2
-66.2V
D3 SV-04
C14 10P
-3.6V
Q7
Q11
C23 0.01
C25 0.01
3
-20mV
Q2
Q3
Q4
D7
R24 22
C19 56P/500
Q9
R43 4.7
-67V
-67V
-66.8V
C17 330P
Q9 2SA899A
Q11 2SB628A
R48 1.3K
R47 100
50mA
C3
C4 100/80
C6 0.01
R5 62K
C12 0.0039
R10 100
R11 1.5K
R12 1.5K
2mA
R16 330
R17 47
Q7 2SC945A
D7 1S2473
C21 0.047
-B 6
100/80
-68V
Q2, Q3 2SC1775A x2
Q4 2SC1439
D9 D21 1S2471 x2
-68.8V
D11 D13 10E2 x2
-70V(-61V)
R49 1.3K
R50 15K
D18
D19
Q12
C24 +0.22/10
R51 15K
D18, D19 1S2471 x2
Q12 2SC869
-B 20

Parts List of Power Amplifier Assembly (AWH-065)

RESISTORS AND POTENTIOMETERS

Symbol	Description			Part No.
TH1	Thermistor			TH101-2
TH2	Thermistor			TH101-2
VR1	Semi-fixed	470-B		ACP-033
VR2	Semi-fixed	470-B		ACP-033
VR3	Semi-fixed	100-B		ACP-032
VR4	Semi-fixed	100-B		ACP-032
R1	Carbon film	560k		RD¼PS 564J
R2	Carbon film	22		RD¼PS 220J
R3	Carbon film	22		RD¼PS 220J
R4	Carbon film	62k		RD¼PS 623J
R5	Carbon film	62k		RD¼PS 623J
R6	Carbon film	120k		RD¼PS 124J
R7	Carbon film	1k		RD¼PS 102J
R8	Carbon film	47k		RD¼PS 473J
R9	Carbon film	470		RD¼PS 471J
R10	Carbon film	100		RD¼PS 101J
R11	Carbon film	1.5k		RD¼PSF 152J
R12	Carbon film	1.5k		RD¼PSF 152J
R13	Carbon film	620		RD¼PSF 621J
R14	Carbon film	68k		RD¼PS 683J
R15	Carbon film	220		RD¼PSF 221J
R16	Carbon film	330		RD¼PSF 331J
R17	Carbon film	47		RD¼PS 470J
R18	Carbon film	470		RD¼PS 471J
R19	Metal oxide	10	2W	RS2P 100J
R20	Carbon film	33		RD¼PSF 330J
R21	Carbon film	33		RD¼PSF 330J
R22	Carbon film	18k		RD¼PS 183J
R23	Carbon film	22		RD¼PSF 220J
R24	Carbon film	22		RD¼PSF 220J
R25	Carbon film	4.7k		RD¼PS 472J
R26	Carbon film	4.7k		RD¼PS 472J
R27	Carbon film	200		RD¼PSF 201J
R28	Carbon film	200		RD¼PSF 201J
R29	Carbon film	330		RD¼PSF 331J
R30	Carbon film	330		RD¼PSF 331J
R31	Carbon film	27		RD¼PS 270J
R32	Carbon film	27		RD¼PS 270J
R33	Carbon film	220	½W	RD½PSF 221J
R34	Carbon film	220	½W	RD½PSF 221J
R35	Carbon film	100	½W	RD½PSF 101J
R36	Carbon film	100	½W	RD½PSF 101J
R37	Wire wound	0.5	5W	RT5B 0R5K
R38	Wire wound	0.5	5W	RT5B 0R5K
R39	Wire wound	0.5	5W	RT5B 0R5K
R40	Wire wound	0.5	5W	RT5B 0R5K
R41	Metal oxide	10	2W	RS2P 100J
R42	Carbon film	4.7		RD¼PSF 4R7J
R43	Carbon film	4.7		RD¼PSF 4R7J
R44	Carbon film	100		RD¼PSF 101J
R45	Carbon film	100		RD¼PSF 101J
R46	Carbon film	100		RD¼PSF 101J
R47	Carbon film	100		RD¼PSF 101J
R48	Carbon film	1.3k		RD¼PS 132J
R49	Carbon film	1.3k		RD¼PS 132J
R50	Carbon film	15k		RD¼PS 153J
R51	Carbon film	15k		RD¼PS 153J
R52	Carbon film	120k		RD¼PS 124J

CAPACITORS

Symbol	Description			Part No.
C1	Electrolytic	100	80V	CEA 101P 80
C2	Electrolytic	100	80V	CEA 101P 80
C3	Electrolytic	100	80V	CEA 101P 80
C4	Electrolytic	100	80V	CEA 101P 80
C5	Ceramic	0.01	150V	ACG-004
C6	Ceramic	0.01	150V	ACG-004
C7	Polyester	1	250V	CQEA 105K 250
C8	Polystyrene	56p	50V	CQSH 560K 50
C9	Ceramic	47p	50V	CCDSL 470K 50
C10	Ceramic	47p	50V	CCDSL 470K 50
C11	Ceramic	330p	50V	CKDYB 331K 50
C12	Ceramic	3900p	50V	CKDYB 392K 50
C13	Polyester	1	250V	CQEA 105K 250
C14	Ceramic	10p	50V	CCDSL 100F 50
C15	Ceramic	8p	50V	CCDSL 080F 50
C16	Polyester	1	250V	CQEA 105K 250
C17	Ceramic	330p	50V	CKDYB 331K 50
C18	Ceramic	56p	500V	CCDSL 560K 500
C19	Ceramic	56p	500V	CCDSL 560K 500
C20	Ceramic	0.047	50V	CKDYF 473Z 50
C21	Ceramic	0.047	50V	CKDYF 473Z 50
C22	Ceramic	0.01	150V	ACG-004
C23	Ceramic	0.01	150V	ACG-004
C24	Electrolytic	0.22	10V	CSSA R22M 10
C25	Mylar	0.01	400V	CQMA 103K 400
C26	Ceramic	0.01	150V	ACG-004

SEMICONDUCTORS

Symbol	Description	Part No.
Q1	Transistor	2SA798-G
Q2	Transistor	2SC1775A-E (2SC1775A-D)
Q3	Transistor	2SC1775A-E (2SC1775A-D)
* hfe of these transistors (Q2, Q3) should have the same value.		
Q4	Transistor	2SC1439-V (2SC1439-B)
Q5	Transistor	2SA858-V (2SA858-B)
Q6	Transistor	2SA733-Q (2SA733-R)
Q7	Transistor	2SC945A-Q (2SC945A-P)
Q8	Transistor	2SC1904A-V (2SC1904A-B)
Q9	Transistor	2SA899A-V (2SA899A-B)
* hfe of these transistors (Q8, Q9) should have the same value.		
Q10	Transistor	2SD608A-R (2SD608A-S) (2SD608A-Q)
Q11	Transistor	2SB628A-R (2SB628A-S) (2SB628A-Q)
* hfe of these transistors (Q10, Q11) should have the same value.		
Q12	Transistor	2SC869-C (2SC869-D)
Q13	Transistor	2SC945A-Q (2SC945A-P)
Q14	Transistor	2SA733-Q (2SA733-R)
D1	Diode	1S2473
D2	Varistor	SV-04
D3	Varistor	SV-04
D4	Varistor	STV3H-G
D5	Varistor	STV3H-G
D6	Diode	1S2473
D7	Diode	1S2473
D8	Diode	1S2471
D9	Diode	1S2471
D10	Diode	10E2 (1S1886)
D11	Diode	10E2 (1S1886)
D12	Diode	10E2 (1S1886)
D13	Diode	10E2 (1S1886)
D14	Diode	10E2 (1S1886)
D15	Diode	10E2 (1S1886)
D16	Diode	1S2472
D18	Diode	1S2471
D19	Diode	1S2471
D20	Diode	1S2471
D21	Diode	1S2471

OTHERS

Symbol	Description	Part No.
L1	AF choke coil 1.1μH	ATH-012
S1	Relay	ASR-035
	Heat sink	ANH-340
	5P plug	AKM-019
	6P plug	AKM-020
	Screw 3 x 10	ABA-144

List of Changed Parts for Factory Modification

Symbol	Description	Part No.

10.4 FUSE ASSEMBLY (AWR-143)

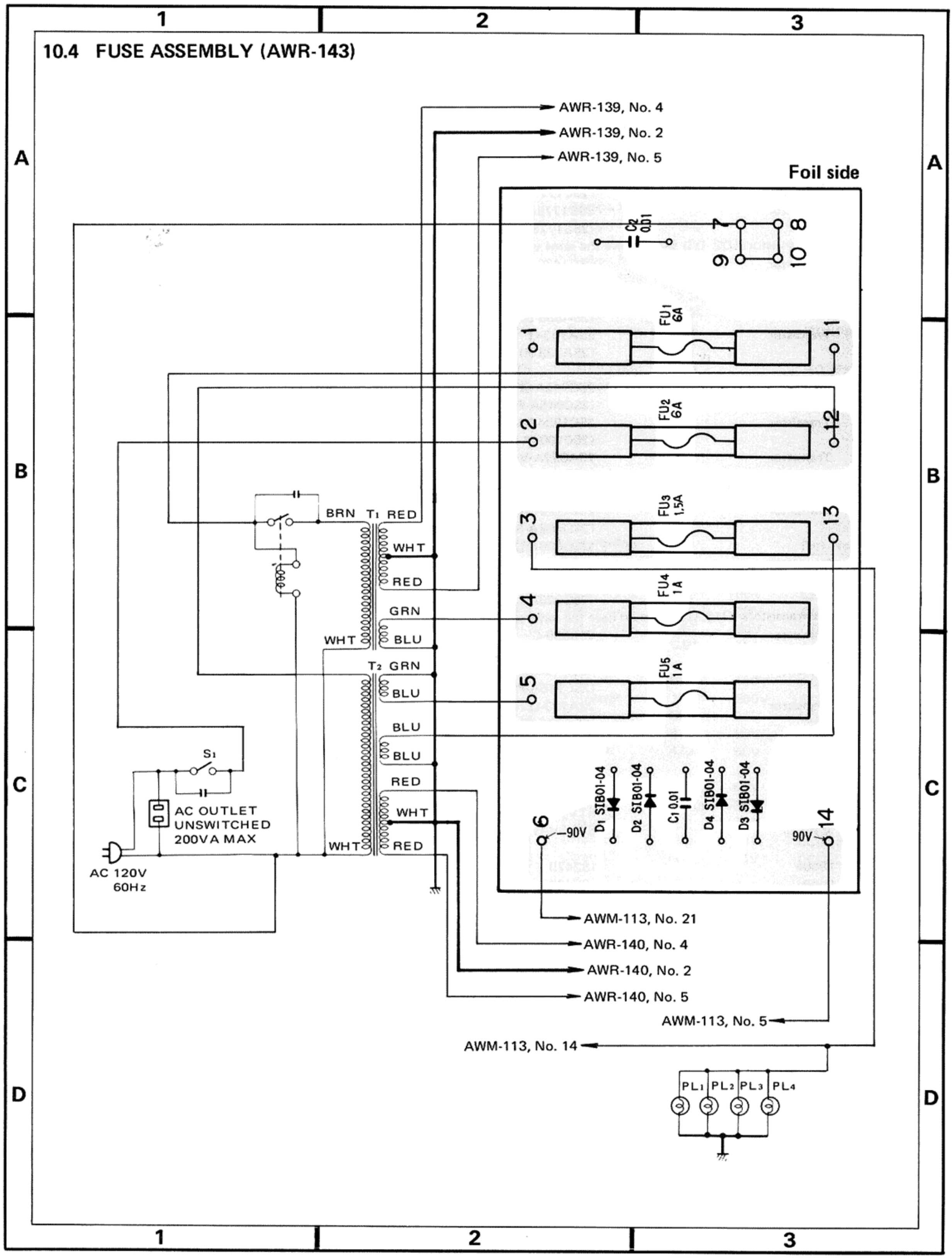

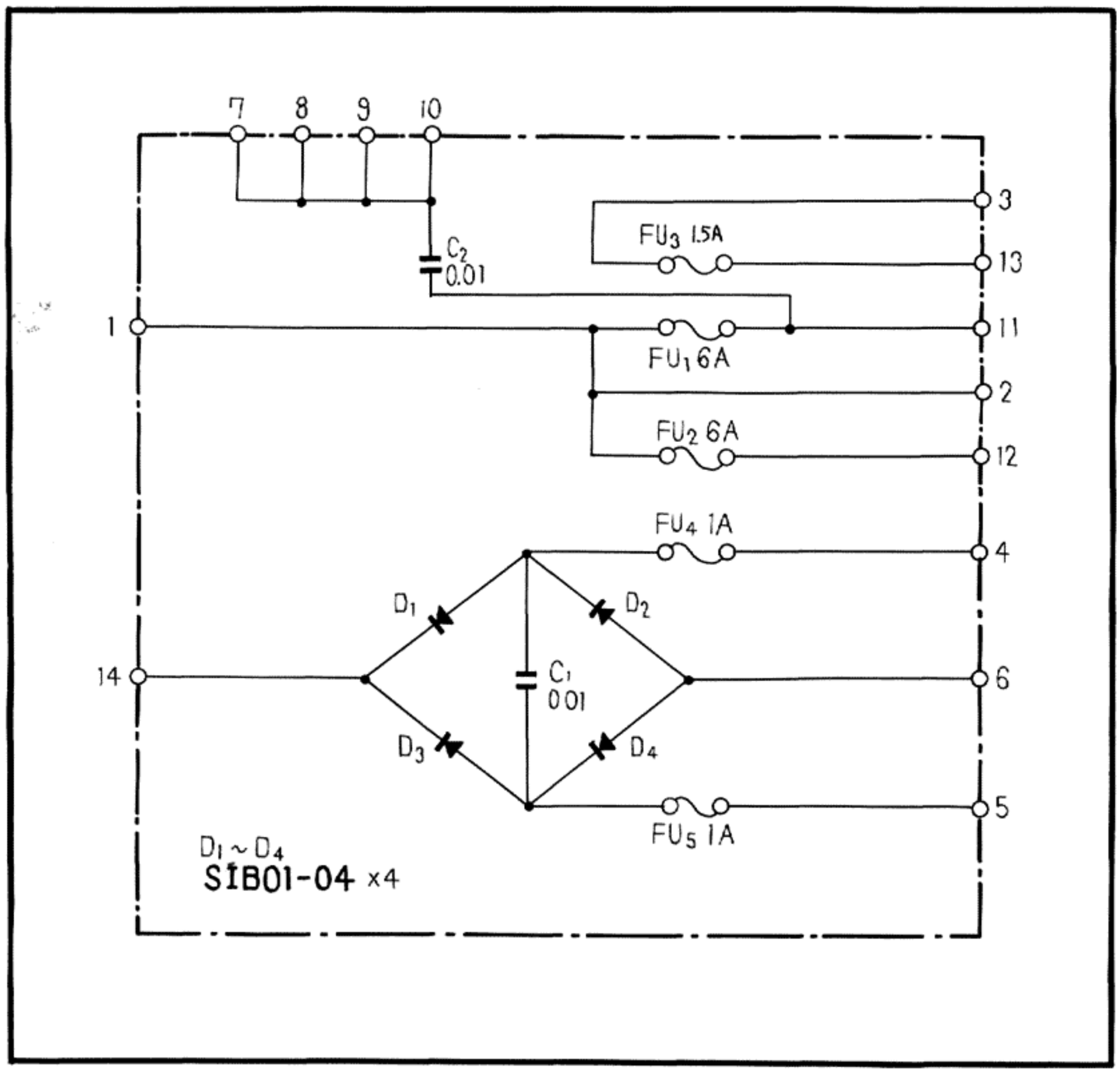

Parts List of Fuse Assembly (AWR-143)

CAPACITORS

Symbol	Description			Part No.
C1	Mylar	0.01	400V	CQMA 103K 400
C2	Ceramic	0.01	125V	ACG-003

SEMICONDUCTORS

Symbol	Description	Part No.
D1	Diode	SIB01-04
D2	Diode	SIB01-04
D3	Diode	SIB01-04
D4	Diode	SIB01-04

OTHERS

Symbol	Description	Part No.
	Fuse clip	AKR-013
	Fuse clip	AKR-030

10.5 POWER SUPPLY ASSEMBLY (AWR-139)

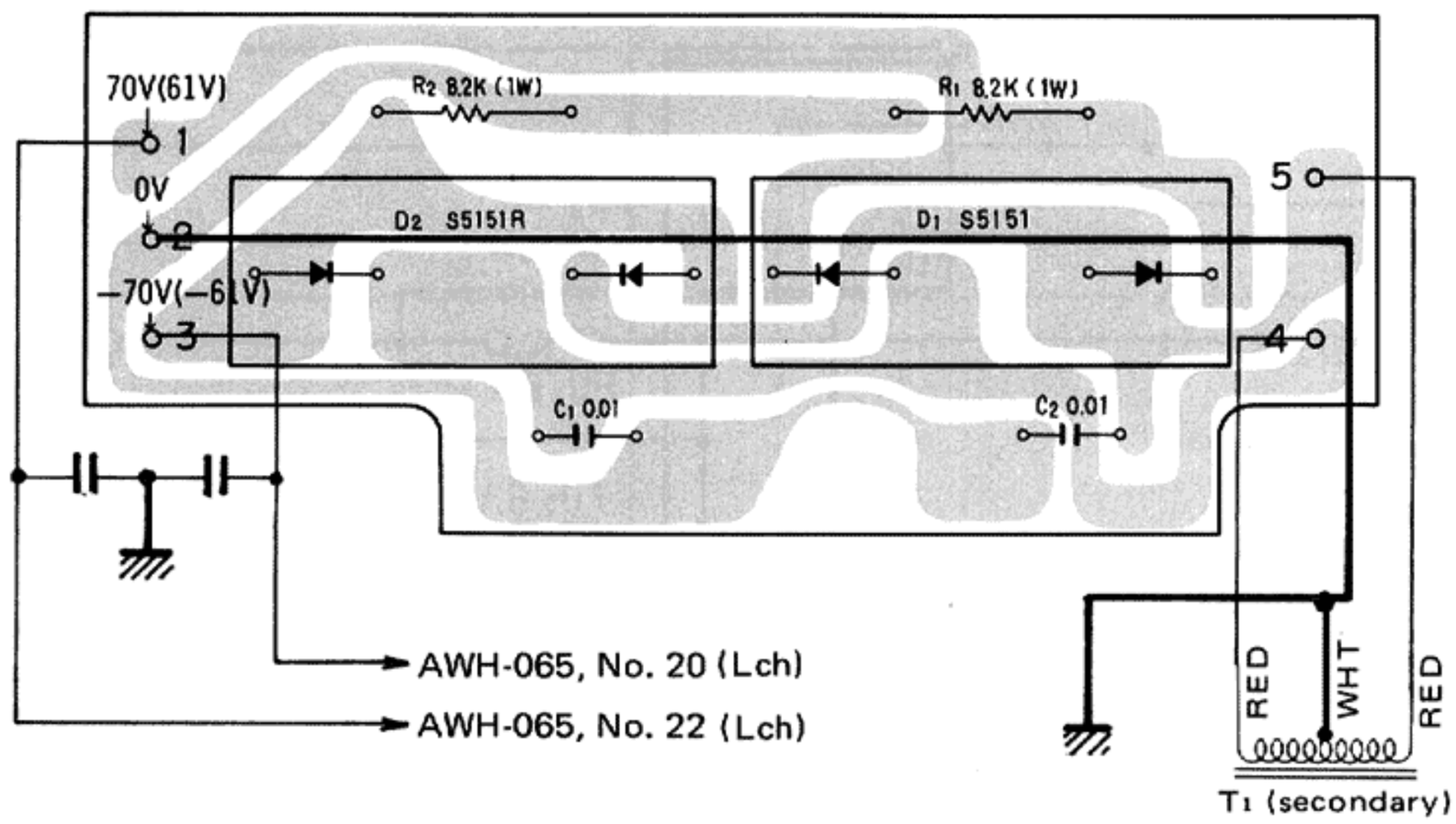

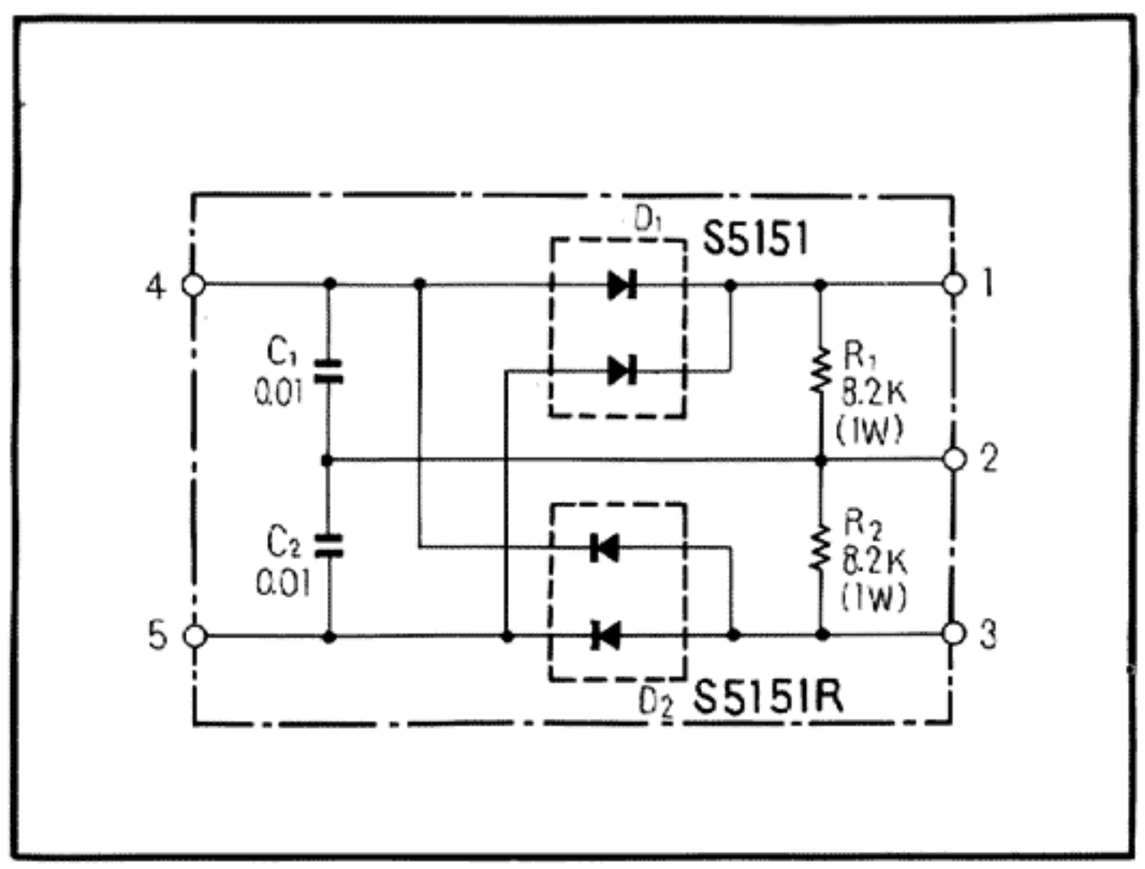

Parts List of Power Supply Assembly (AWR-139)

RESISTORS

Symbol	Description			Part No.
R1	Metal film	8.2k	1W	RS1P 822J
R2	Metal film	8.2k	1W	RS1P 822J

SEMICONDUCTORS

Symbol	Description	Part No.
D1	Diode	S5151 (SS5)
D2	Diode	S5151R (SS5R)

CAPACITORS

Symbol	Description			Part No.
C1	Mylar	0.01	400V	CQMA 103K 400
C2	Mylar	0.01	400V	CQMA 103K 400

10.6 POWER SUPPLY ASSEMBLY (AWR-140)

Foil side

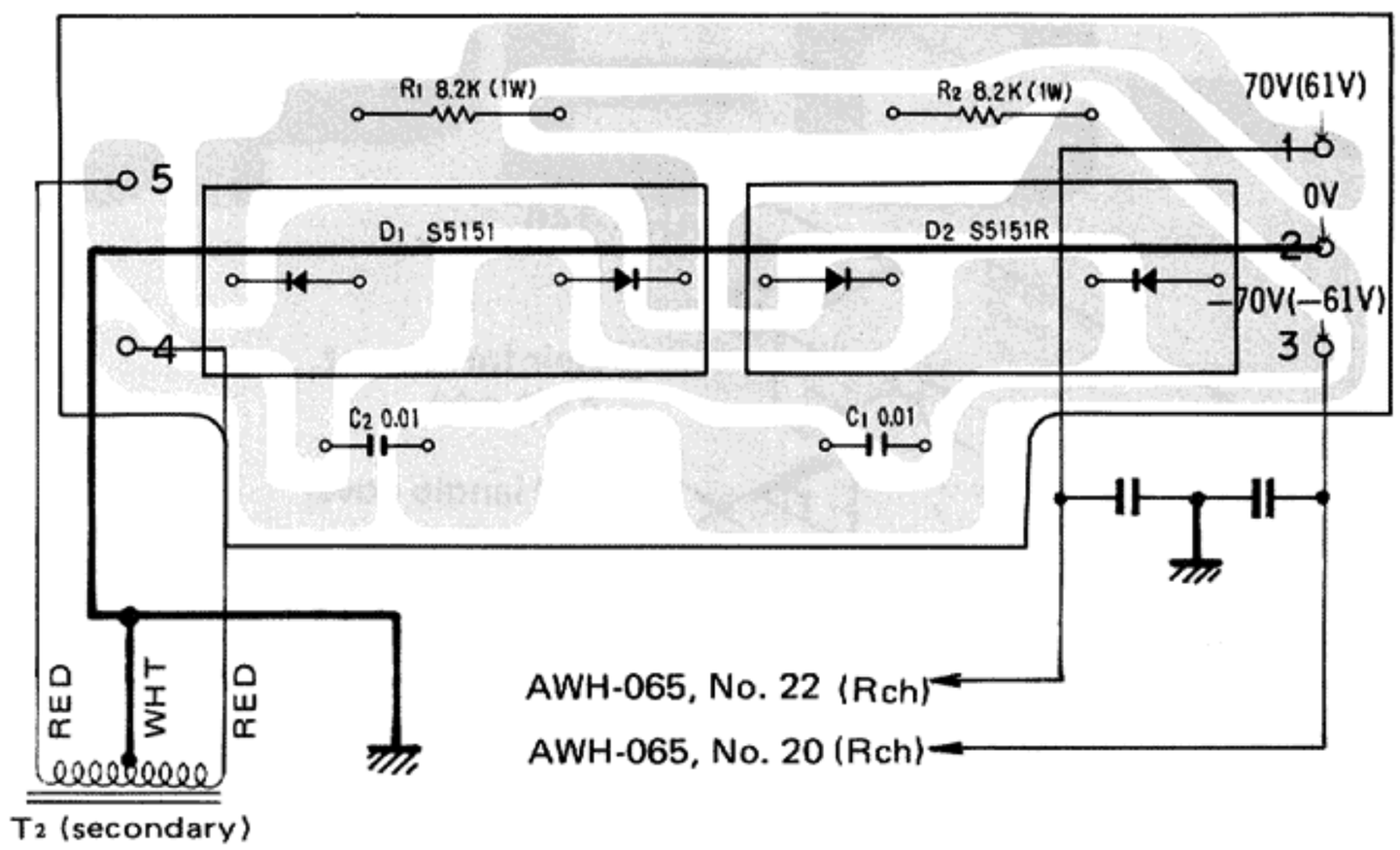

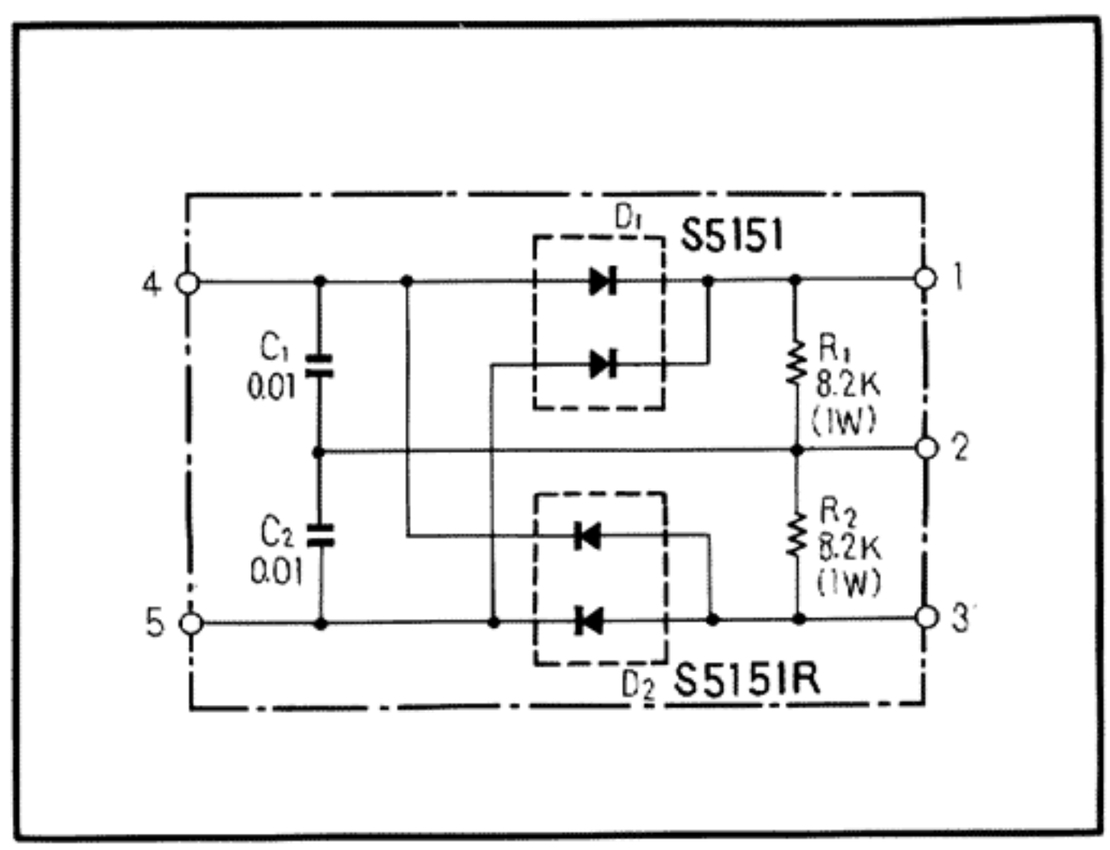

Parts List of Power Supply Assembly (AWR-140)

RESISTORS

Symbol	Description			Part No.
R1	Metal film	8.2k	1W	RS1P 822J
R2	Metal film	8.2k	1W	RS1P 822J

SEMICONDUCTORS

Symbol	Description	Part No.
D1	Diode	S5151 (SS5)
D2	Diode	S5151R (SS5R)

CAPACITORS

Symbol	Description			Part No.
C1	Mylar	0.01	400V	CQMA 103K 400
C2	Mylar	0.01	400V	CQMA 103K 400

11. PACKING

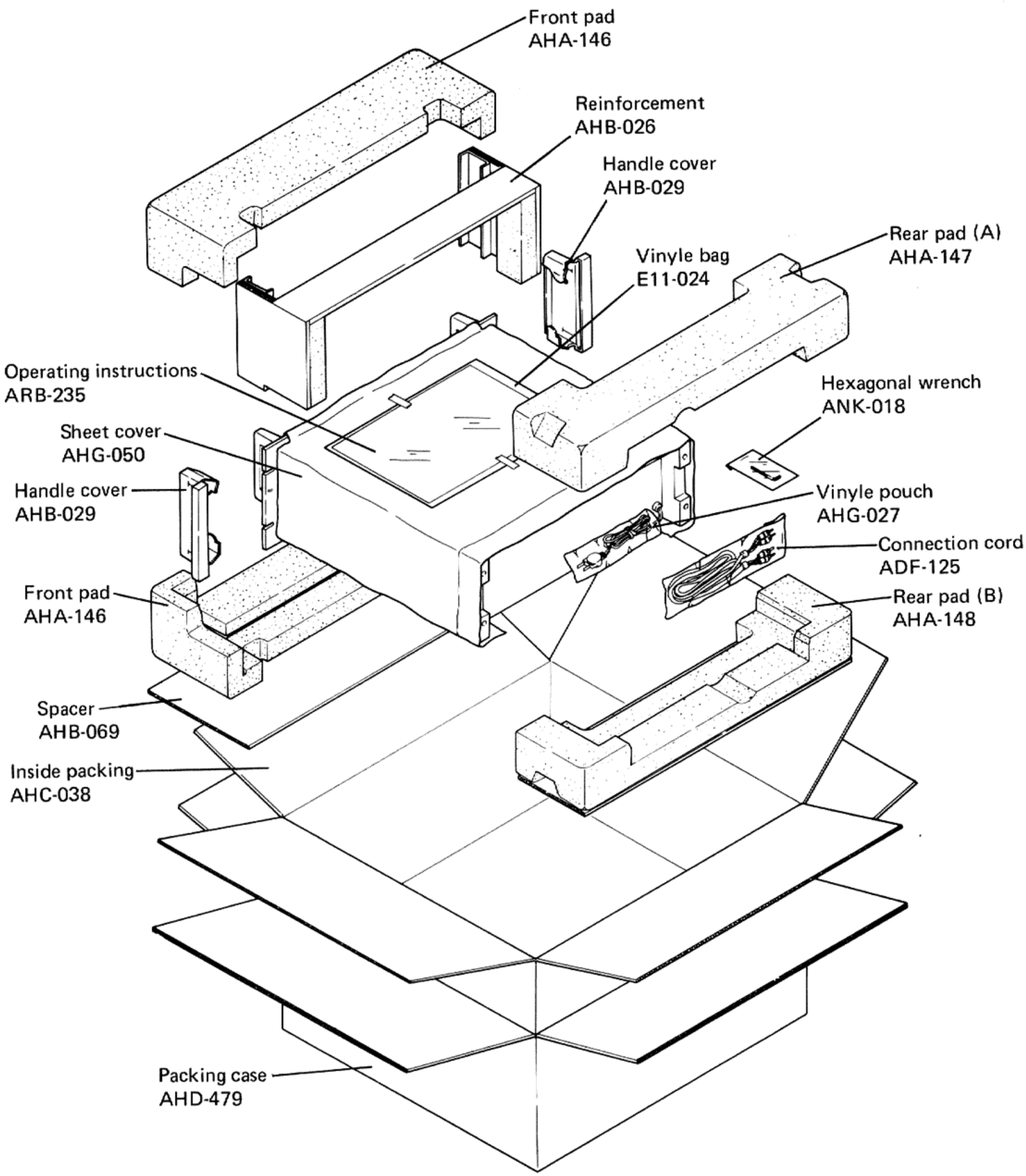
Front pad
AHA-146
Reinforcement
AHB-026
Handle cover
AHB-029
Rear pad (A)
AHA-147
Vinyle bag
E11-024
Operating instructions
ARB-235
Hexagonal wrench
ANK-018
Sheet cover
AHG-050
Handle cover
AHB-029
Vinyle pouch
AHG-027
Connection cord
ADF-125
Front pad
AHA-146
Rear pad (B)
AHA-148
Spacer
AHB-069
Inside packing
AHC-038
Packing case
AHD-479