SA-9800 S S/G SCHEMATIC DIAGRAM

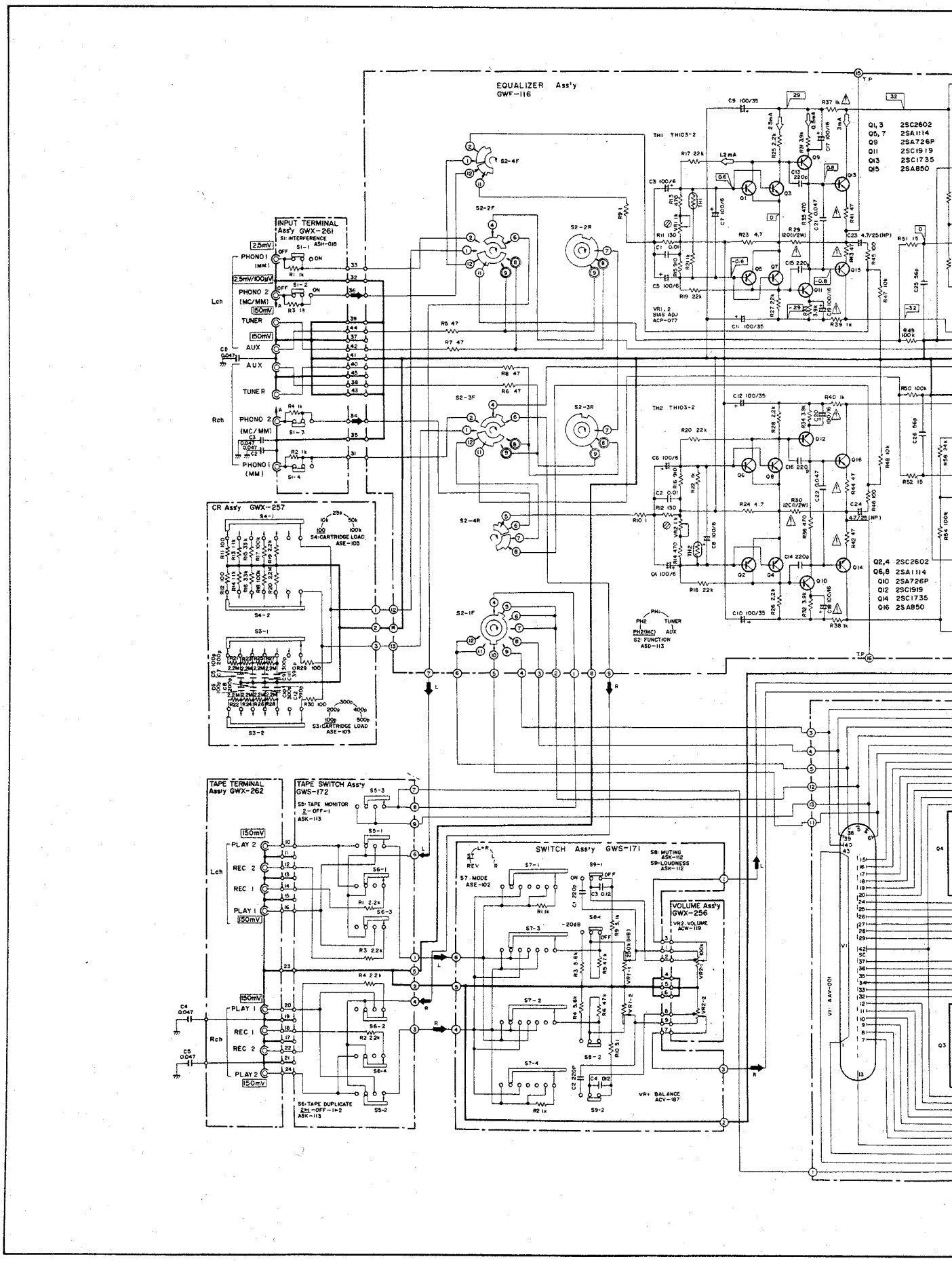

M

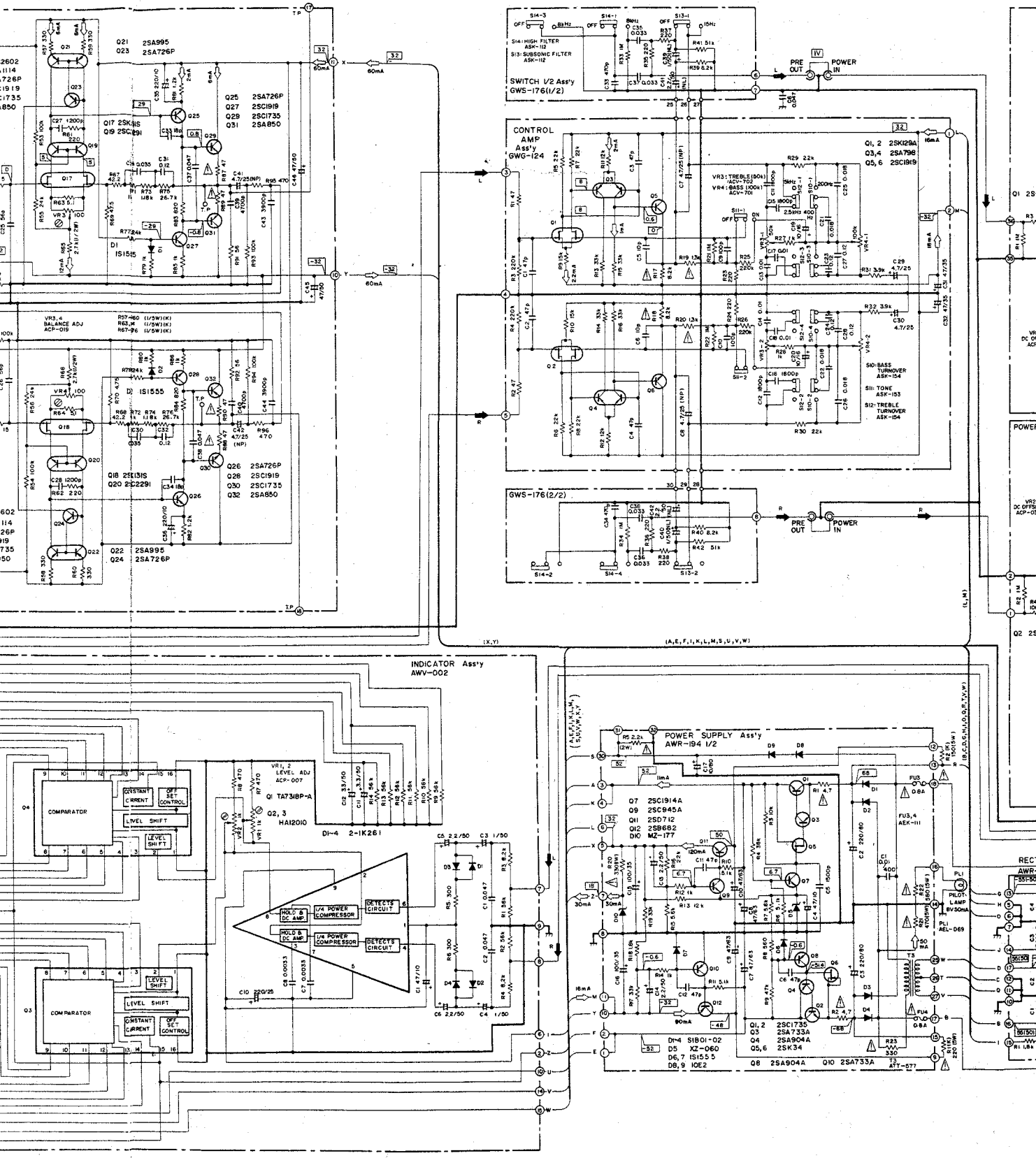
SWITCH 1/2 Ass'y
GWS-176(1/2)
S14: HIGH FILTER ASK-112
S13: SUBSONIC FILTER ASK-112
PRE OUT
POWER IN
CONTROL AMP Ass'y
GWG-124
VR3: TREBLE(50k) ACV-702
VR4: BASS (100k) ACV-701
S10: BASS TURNOVER ASK-154
S11: TONE ASK-153
S12: TREBLE TURNOVER ASK-154
GWS-176(2/2)
INDICATOR Ass'y
AWV-002
COMPARATOR
CONSTANT CURRENT
OFF SET CONTROL
LEVEL SHIFT
HOLD & DC AMP
1/4 POWER COMPRESSOR
DETECTS CIRCUIT
POWER SUPPLY Ass'y
AWR-194 1/2
PILOT LAMP
AEL-069

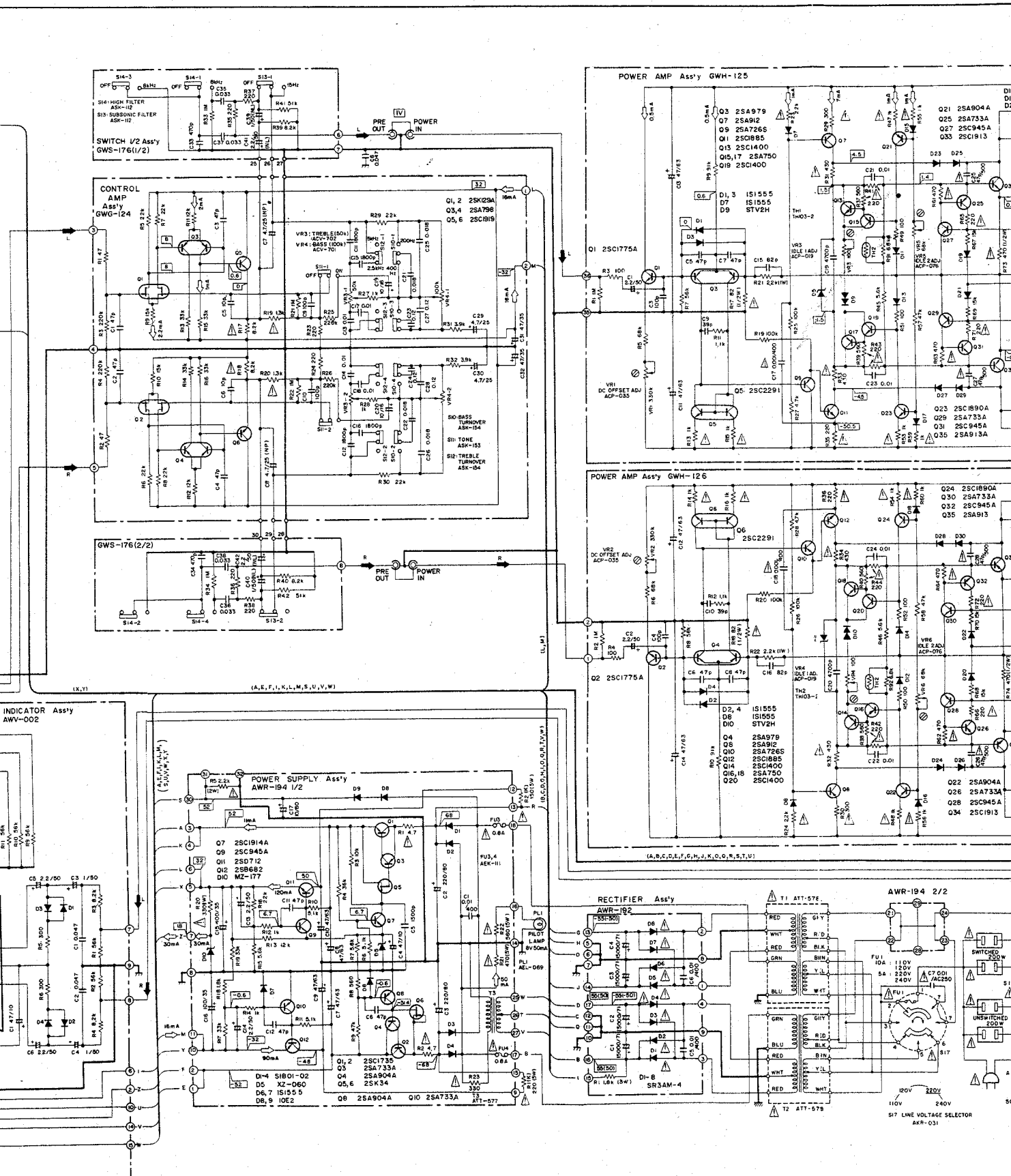

This is the

circuit may

PIONEER®

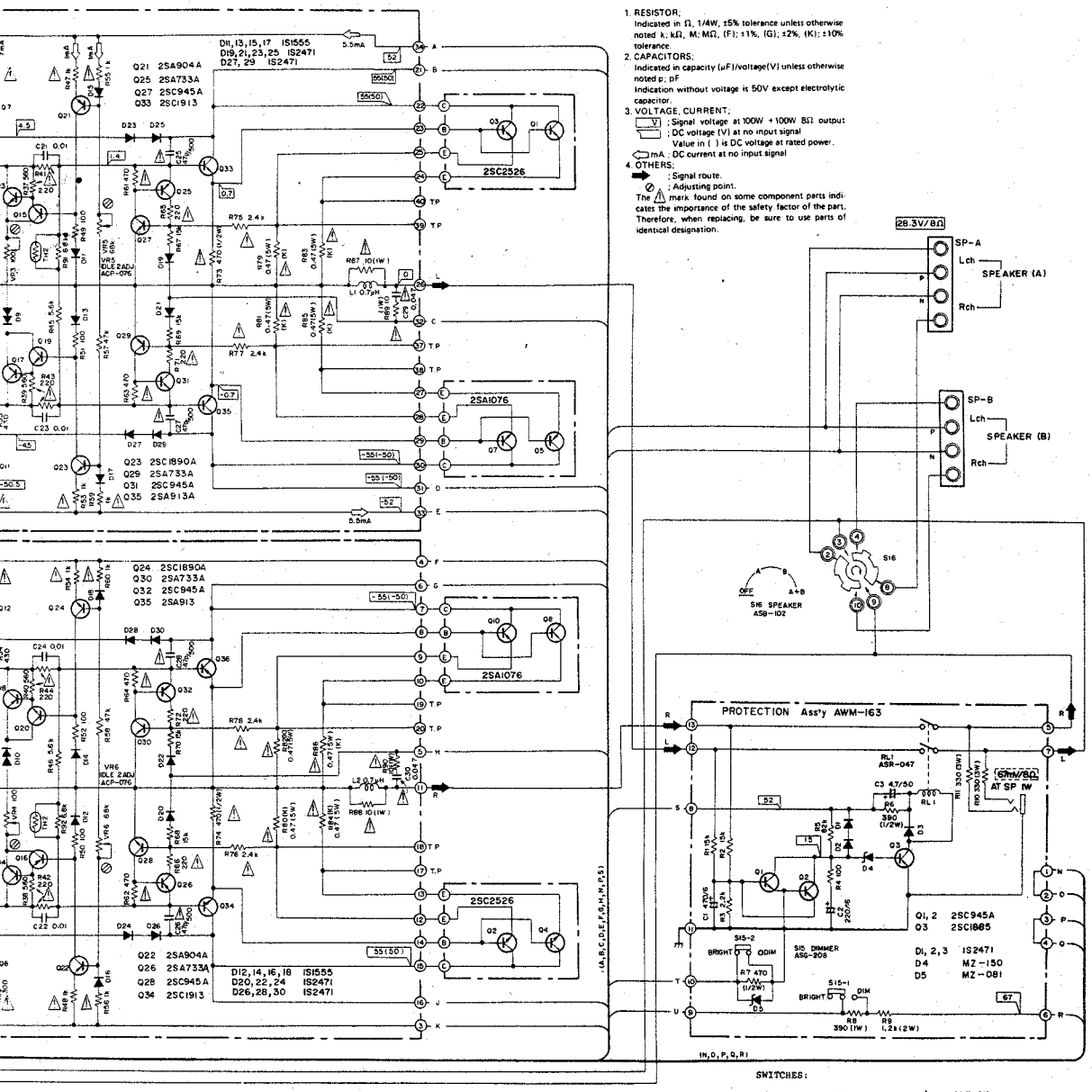

1. RESISTOR;
Indicated in Ω, 1/4W, ±5% tolerance unless otherwise noted k; kΩ, M; MΩ, (F); ±1%, (G); ±2%, (K); ±10% tolerance.
2. CAPACITORS;
Indicated in capacity (μF)/voltage(V) unless otherwise noted p; pF
Indication without voltage is 50V except electrolytic capacitor.
3. VOLTAGE, CURRENT;
V ; Signal voltage at 100W +100W 8Ω output
; DC voltage (V) at no input signal
; Value in ( ) is DC voltage at rated power.
mA ; DC current at no input signal
4. OTHERS;
; Signal route.
; Adjusting point.
The ⚠ mark found on some component parts indicates the importance of the safety factor of the part. Therefore, when replacing, be sure to use parts of identical designation.

SWITCHES:

S1: INTERFERENCE	OFF-ON
S2: FUNCTION	PHONO 2(MC)-PHONO 2(MM)-PHONO 1(MM)-TUNER-AUX
S3: CARTRIDGE LOAD (C)	100p-200p-300p-400p-500p
S4: CARTRIDGE LOAD (R)	100-10k-25k-50k-100k
S5: TAPE MONITOR	1-OFF-2
S6: TAPE DUPLICATE	1→2-OFF-2→1
S7: MODE	REV-STEREO- L+ R- L- R
S8: MUTING	OFF- -20dB
S9: LOUDNESS	OFF-ON
S10: BASS TURNOVER	400Hz-200Hz
S11: TONE	OFF-ON
S12: TREBLE TURNOVER	2.5kHz-5kHz
S13: SUBSONIC FILTER	OFF-15Hz
S14: HIGH FILTER	OFF-8kHz
S15: DIMMER	BRIGHT-DIM
S16: SPEAKER	OFF-ON
S18: POWER	OFF- A- B- A+B

The underlined indicates the switch position.

This is the basic schematic diagram, but the actual circuit may vary due to improvements in design.