HiFi ENGINE®

For more Hi-Fi manuals and set-up information
please visit www.hifiengine.com

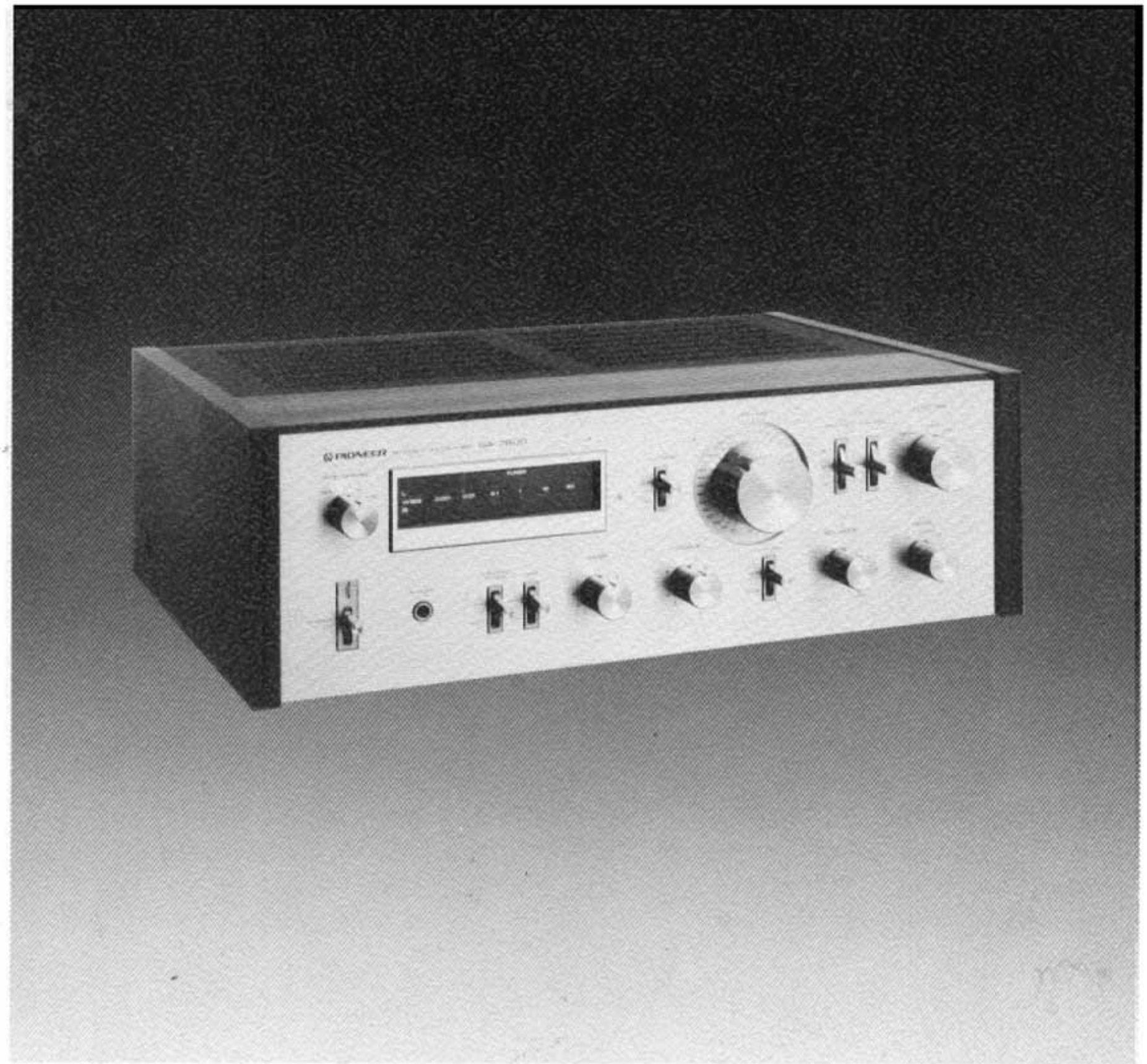

Service Manual

STEREO AMPLIFIER

SA-7800

PIONEER®

MODEL SA-7800 COMES IN FIVE VERSIONS DISTINGUISHED AS FOLLOWS:

Type	Voltage	Remarks
KU	120V only	U.S.A. model
KC	120V only	Canada model
S	110V, 120V, 220V and 240V (Switchable)	General export model
S/G	110V, 120V, 220V and 240V (Switchable)	U.S. Military model
HG	220V and 240V (Switchable)	Europe or Oceania model

- **Although the basic features of KU, KC, S, S/G and HG types are the same. The major difference is in appearance, KU, KC and S/G types being fitted with wooden case, while S and HG types employ metal cover.**
- **This service manual is applicable to the KU type. When repairing the KC, S and S/G types, please see the additional service manual (ART-354-0). When repairing the HG type, please see the additional service manual (ART-345-0).**

CONTENTS

1. SPECIFICATIONS 3
2. FRONT PANEL FACILITIES 4
3. BLOCK DIAGRAM 6
4. CIRCUIT DESCRIPTIONS
   - 4.1 Phono Circuit 6
   - 4.2 Tone Controls 7
   - 4.3 Power Amplifier 7
   - 4.4 Indicator Circuit 9
   - 4.5 Protection Circuit 10
5. ADJUSTMENTS 11
6. DISASSEMBLY 12
7. PARTS LOCATION 13
8. EXPLODED VIEW 15
9. SCHEMATIC DIAGRAMS. P.C. BOARD PATTERNS AND PARTS LIST
   - 9.1 Miscellanea 18
   - 9.2 Schematic Diagram 19
   - 9.3 P.C. Board Connection Diagram 23
   - 9.4 Equalizer Assembly (GWF-115) 27
   - 9.5 Tone Amplifier Assembly (GWG-123) 28
   - 9.6 Terminal Assembly (GWX-259) 29
   - 9.7 Volume Assembly (GWX-258) 29
   - 9.8 Switch Assembly 1 (GWS-169) 29
   - 9.9 Power Amplifier Assembly (GWH-118) 30
   - 9.10 Phone Jack Assembly (GWX-260) 31
   - 9.11 Indicator Assembly (AWV-001) 32
   - 9.12 Switch Assembly 2 (GWS-170) 33
   - 9.13 Power Supply Assembly (GWR-112) 34
10. PACKING 35

1. SPECIFICATIONS

Semiconductors

ICs 3
FETs 6
Transistors 73
Diodes 49
Others 2

Power Amplifier Section

Continuous Power Output is 65watts* per channel, min., at 8 ohms from 10 Hertz to 20,000 Hertz with no more than 0.009% total harmonic distortion, or 65 watts* per channel at 4 ohms from 10 Hertz to 20,000 Hertz with no more than 0.009% total harmonic distortion.

Continuous Power Output
  10Hz to 50,000Hz: 65W + 65W (T.H.D. 0.02%, 8 ohms)
  80W + 80W (T.H.D. 0.03%, 4 ohms)
Total Harmonic Distortion (10 Hertz to 20,000 Hertz, from AUX)
  continuous rated power output . . No more than 0.009%
  32.5 watts per channel power output,
    8 ohms . . . . . No more than 0.007%
  1 watt per channel power output,
    8 ohms . . . . . No more than 0.007%
Intermodulation Distortion (50 Hertz : 7,000 Hertz = 4 : 1)
  continuous rated power output . . No more than 0.003%
  32.5 watts per channel power output,
    8 ohms . . . . . No more than 0.003%
  1 watt per channel power output,
    8 ohms . . . . . No more than 0.003%
Output
  Speaker . . . . . A, B, A+B
  Headphones . . . . . Low impedance
Damping Factor
  (20 Hertz to 20,000 Hertz, 8 ohms) 55
Input (Sensitivity/Impedance)
  PHONO . . . . . 2.5mV/50 kilohms
  TUNER . . . . . 150mV/50 kilohms
  AUX . . . . . 150mV/50 kilohms
  TAPE PLAY 1 . . . . . 150mV/50 kilohms
  TAPE PLAY 2 . . . . . 150mV/50 kilohms
Phono Overload Level (T.H.D. 0.003%, 1kHz)
  PHONO 200mV
Output
  TAPE REC 1 . . . . . 150mV
  TAPE REC 2 . . . . . 150mV
Frequency Response
  PHONO(RIAA Equalization): 20Hz to 20,000Hz ±0.2dB
  TUNER, AUX, TAPE PLAY : 5Hz to 100,000Hz $^{+0}_{-1}$ dB

Tone Control
  BASS . . . . . +10dB, −10dB (100Hz)
  TREBLE . . . . . +10dB, −10dB (10kHz)
Subsonic Filter 15Hz (6dB/oct.)
Loudness Contour (Volume control set at −40dB position)
  . . . . . +6dB (100Hz), +3dB (10kHz)
Hum and Noise (IHF, short-circuited, A network)
  PHONO 87dB
  TUNER, AUX, TAPE PLAY 110dB
Muting . . . . . −20dB

Miscellaneous

Power Requirements 120V, 60Hz
Power Consumption . . . . . 220W (UL), 490VA (CSA)
Dimensions . . . . . 453(W) x 155(H) x 376(D) mm
  17-11/16(W) x 6-1/8(H) x 14-13/16(D) in
Weight Without package . . . . . 12.7kg (28 lb)

Furnished Parts

Operating instructions 1

* *Measured pursuant to Federal Trade Commission's Trade Regulation rule on Power Output Claims for Amplifiers.*

NOTE:
Specifications and the design subject to possible modification without notice due to improvements.

2. FRONT PANEL FACILITIES

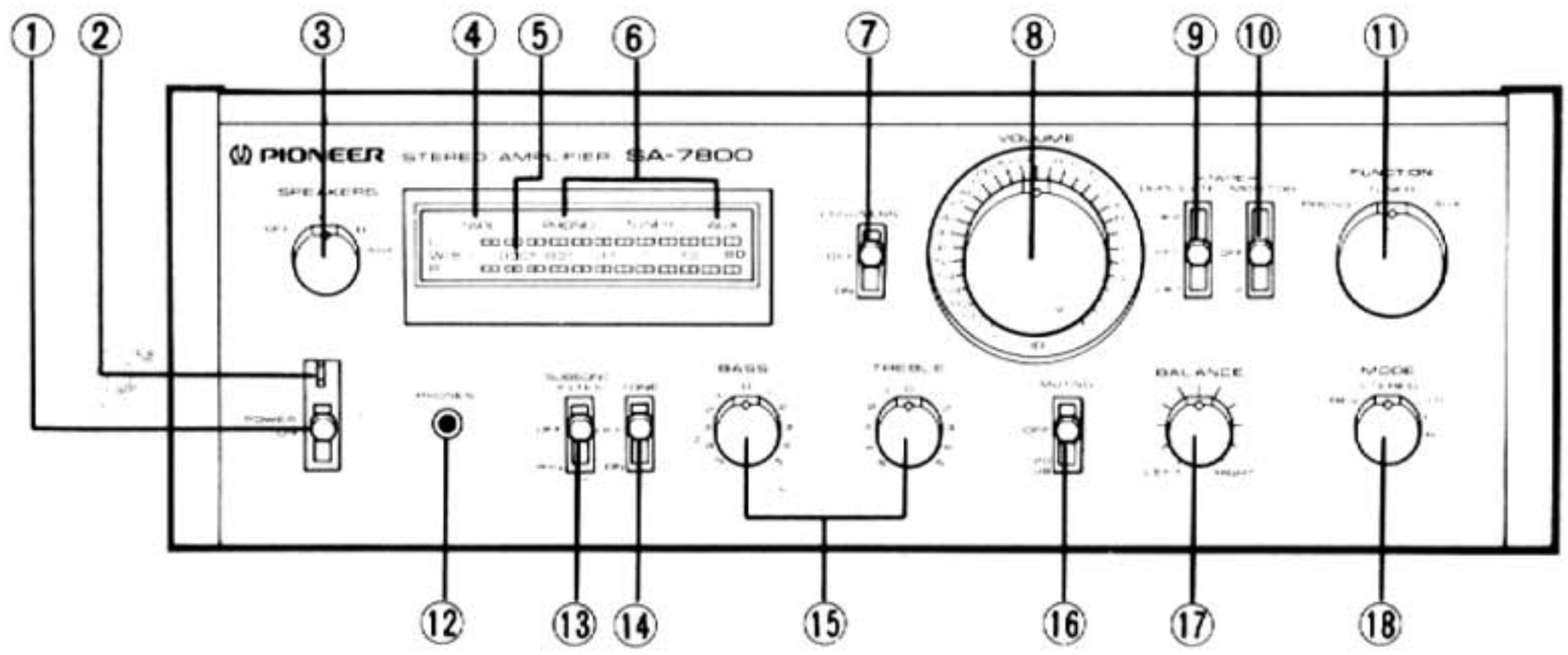

① POWER SWITCH

Set this switch to ON to supply power to the amplifier. There will be a short delay when it is set to ON, because the muting circuit has been actuated to suppress the unpleasant noise that is sometimes generated when the power is on and off.

② POWER INDICATOR

When the power switch is set to ON, this lamp lights up, indicating the amplifier is turned on.

③ SPEAKER SELECTOR

Use this selector to select the speaker systems.

OFF: Sound not obtained from speakers.

A: Sound obtained from speakers connected to the A speaker terminals.

B: Sound obtained from speakers connected to the B speaker terminals.

A+B: Sound obtained from speakers connected to both A and B speaker terminals.

④ TAPE MONITOR INDICATOR

The TAPE lamp lights up when the tape monitor switch is set to either position "1" or "2".

⑤ POWER METER

This meter allows you to read out the rated power level on the fluorescent display tube when speakers with a nominal impedance of 8 ohms are connected to the amplifier's speaker terminals.

⑥ FUNCTION INDICATORS

The PHONO, TUNER, AUX function indicators light up in accordance with the position of the function selector.

NOTES:
The function indicator will not go off when the tape monitor switch is set to position "1" or "2".

⑦ LOUDNESS SWITCH

When listening to a performance with the volume control turned down, set this switch to ON and the bass and treble will be accentuated.
When the volume is low, the human ear finds it harder to hear the bass and treble than when the volume is high. The loudness switch is thus designed to compensate for this deficiency. By setting it to ON, the bass and treble come through much more strongly and the sound takes on a punch even when the volume control is turned down.

⑧ VOLUME CONTROL

Use this control to adjust the output level to the speakers and headphones. Turn it clockwise to increase the output level. No sound will be heard if you set it to ∞. The scale is graduated in dB which indicate the attenuation when the maximum output level is 0dB.

⑨ TAPE DUPLICATE SWITCH

Use this switch when employing two tape decks to duplicate recorded tapes or edit tapes. This switch is otherwise kept at the OFF position.

1▶2: When playing back the tape on a deck connected to the TAPE 1 jacks and recording (duplicating) on a deck connected to the TAPE 2 jacks.

OFF: Set to this position when not duplicating.

2▶1: When playing back the tape on a deck connected to the TAPE 2 jacks and recording (duplicating) on a deck connected to the TAPE 1 jacks.

⑩ TAPE MONITOR SWITCH

Use this to select the program source which is being reproduced.

1: Set here to monitor a recording or a tape being played back on a tape deck which is connected to the TAPE 1 jacks.

OFF: Set here whenever you are not playing back a tape or monitoring a recording (i.e. when you have set the function selector to PHONO or TUNER, or AUX for an alternative program source).

2: Set here to monitor a recording or a tape being played back on a tape deck which is connected to the TAPE 2 jacks.

⑪ FUNCTION SELECTOR

Use this selector to select the program source. When set, the function indicator above the meter panel corresponding to the position of the function selector will light up.

PHONO: Set here when playing records on a turntable connected to the PHONO jacks. (The PHONO function indicator lights up.)

TUNER: Set here when listening to broadcasts on a tuner connected to the TUNER jacks. (The TUNER function indicator lights up.)

AUX: Set here when listening to a program source which is connected to the AUX jacks.
(The AUX function indicator lights up.)

⑫ HEADPHONE JACK

Plug the headphones into this jack when you want to listen through your stereo headphones.

NOTE:
Set the speaker selector to OFF when listening only with headphones.

⑬ SUBSONIC FILTER SWITCH

When this switch is set to the 15Hz position, the subsonic filter with a cut-off frequency of 15Hz is actuated. The subsonic filter serves to attenuate frequencies lower than 15Hz in a 6dB/oct slope. It is therefore effective in suppressing ultra-low-frequency noise which is generated by record warp and other causes. You cannot actually hear this noise but it is a factor in the generation of intermodulation distortion and it may damage your speaker system. Set this switch to the 15Hz position during record play for the best effect.

⑭ TONE SWITCH

Set this switch to ON when adjusting the bass and treble controls. When set to OFF, the tone control circuits are disengaged and frequency response is flat. This function is convenient for checking phono cartridge and speaker tone quality and listening room acoustics.

⑮ BASS AND TREBLE CONTROLS

Use these controls to adjust the bass and the treble. If you set the tone switch to ON and turn the bass control to right from its center position, you will be able to emphasize the sound in the low-frequency range. Conversely, turning the bass control to the left from the center position, you will attenuate the sound.
You can use the treble control to adjust the sound in the high-frequency range.

⑯ MUTING SWITCH

Set this switch to −20dB to attenuate the audio output indicated by the volume control by 20dB. There is no need to adjust the volume control if you use this switch when turning down the audio output temporarily and when changing over records or tapes.

⑰ BALANCE CONTROL

Use this control to balance the volume of the left and right channels. First, however, set the mode selector to mono (L+R, L, or R), and adjust so that the sound appears to come from somewhere exactly between the two speakers. If the sound appears to be louder on the right, it means that the volume of the right channel is higher. Turn the balance control to the left and adjust.
Conversely, if the sound appears to be louder on the left, it means that the volume of the left channel is higher. Therefore, turn the balance control to the right and adjust. After adjusting, return the mode selector to STEREO.

⑱ MODE SELECTOR

Use this selector for selecting the performances.

REV: Reverses left and right channel stereo signals and reproduces them stereophonically.

STEREO: Set to this position for normal stereo reproduction.

L+R: Mixes left and right channel signals and reproduces them monophonically.

L: Left channels signal is reproduced monophonically, from both speakers.

R: Right channel signal is reproduced monophonically from both speakers.

3. BLOCK DIAGRAM

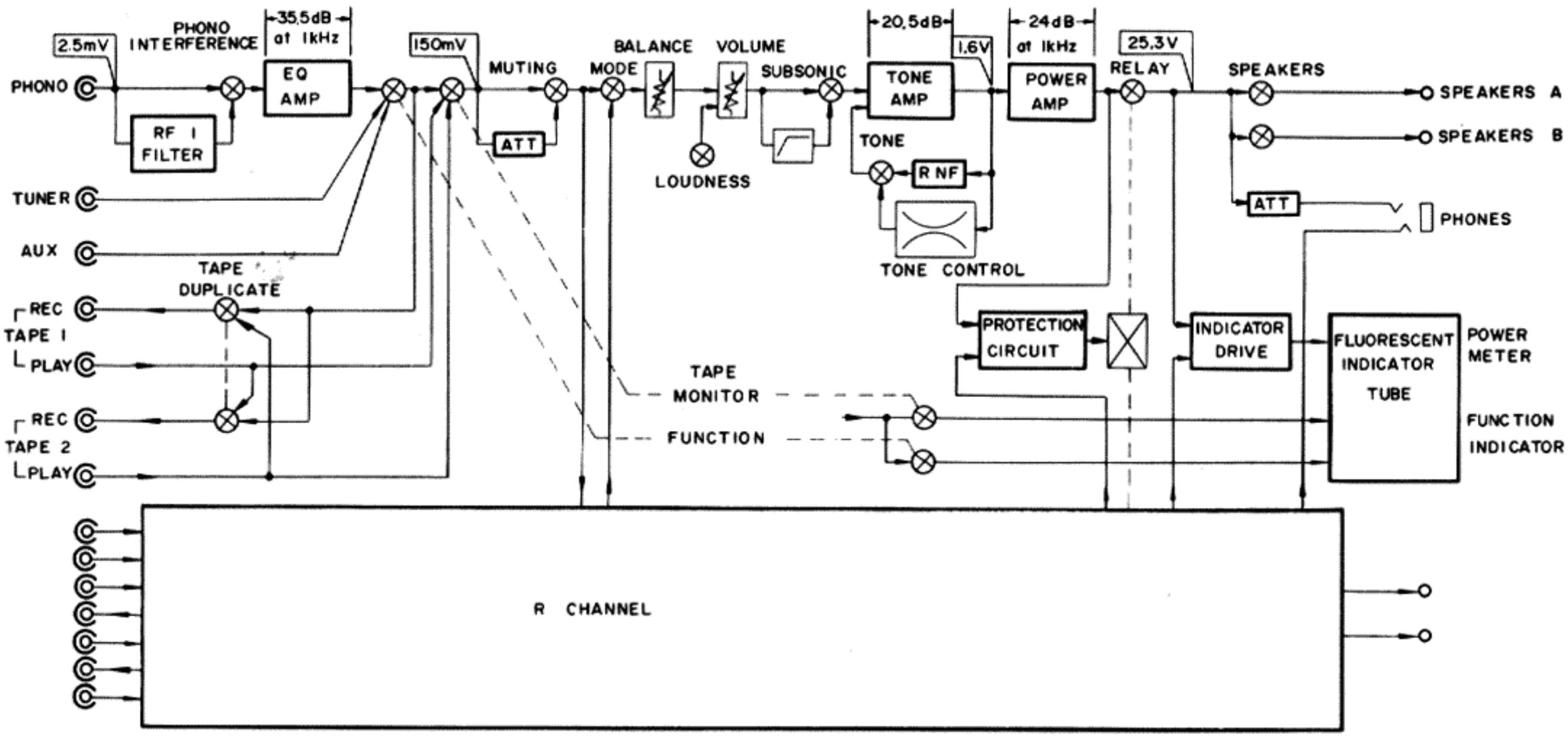

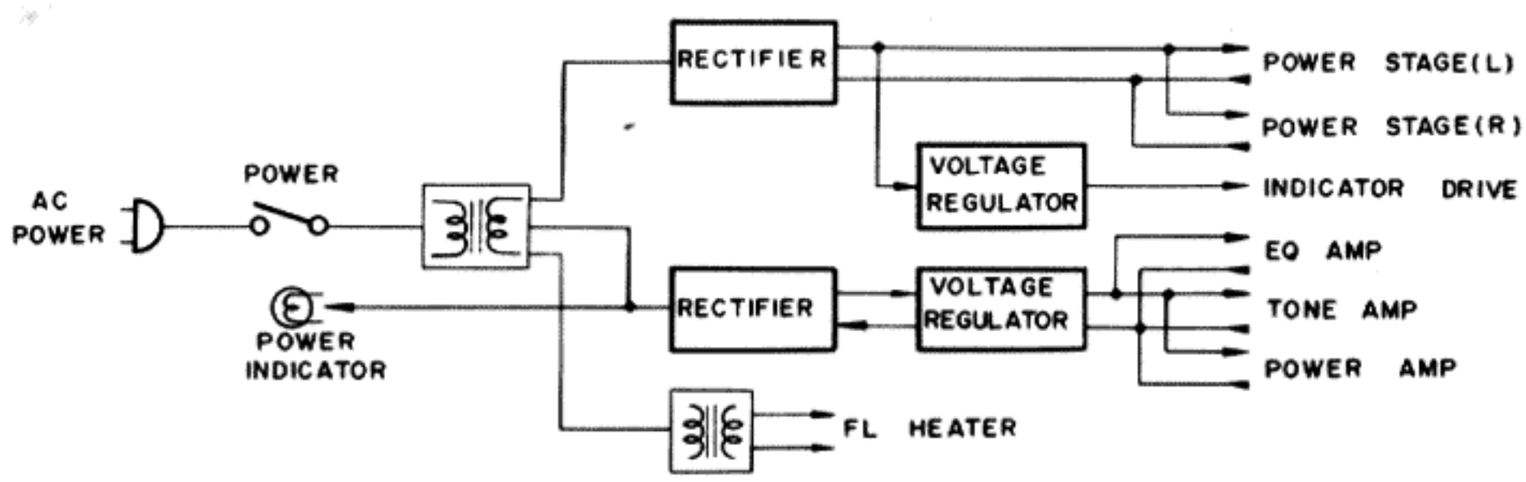

4. CIRCUIT DESCRIPTIONS

4.1 PHONO CIRCUIT

RF Interference Filter (Fig. 1)

Since the phono input circuit is extremely sensitive, it is adversely affected by radio frequency interference. This interference is reduced by inserting a resistor in series with the phono input circuit by setting the PHONO INTERFERENCE FILTER switch on the rear panel to the ON position.

Equalizer Amplifier (Fig. 1)

The equalizer amplifier is a 3-stage direct-coupled amplifier with emitter-to-emitter feedback. An S-N ratio of 87dB (at 2.5mV input, IHF-A, PHONO INTERFERENCE FILTER switch OFF) has been achieved by using a new ultra-low-noise PNP transistor (2SA1114) at the first stage, and reducing the signal source resistance and equalizer element impedance.

The 2nd stage load has been reduced, a large output voltage obtained, and the output impedance lowered by using an emitter follower at the output stage.

Metal film resistors having a tolerance of ±1% and polypropylene film capacitors having a tolerance of ±2% are used on the NFB circuit to obtain an equalizer deviation of within ±0.2dB over the 20Hz to 20000Hz range. The maximum allowable input of this circuit is 200mV (at 1kHz, THD 0.003%).

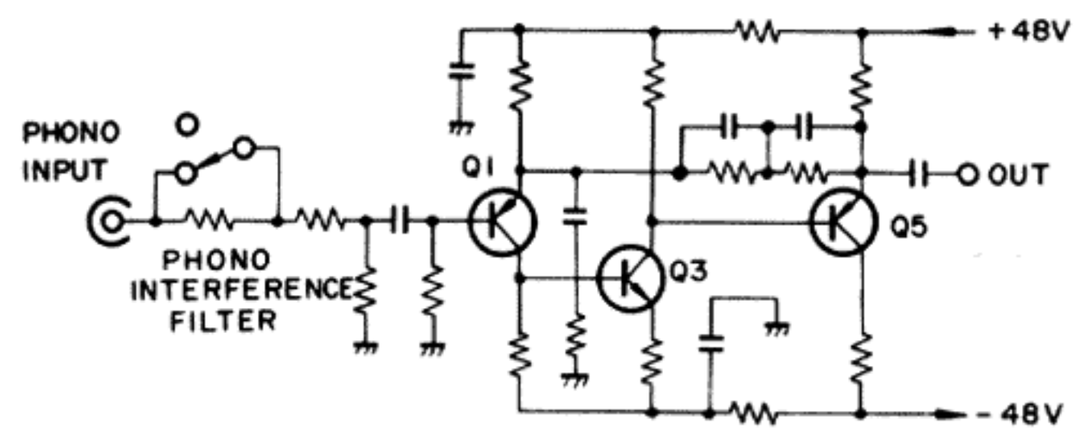

Fig. 1 Basic circuit of equalizer amplifier

4.2 TONE CONTROLS

The tone amplifier is a 3-stage direct-coupled amplifier, the 1st stage is a differential amplifier consisting of a ultra-low-noise twin FET. The 2nd stage is a differential amplifier consisting of two PNP transistors, and the output impedance lowered by using an emitter follower at the output stage (see Fig. 2).

Tone control (BASS, TREBLE) is accomplished by providing the tone amplifier NFB circuit with a frequency characteristic. The NFB circuit is changed to a flat frequency characteristic when the TONE switch is in the OFF position.

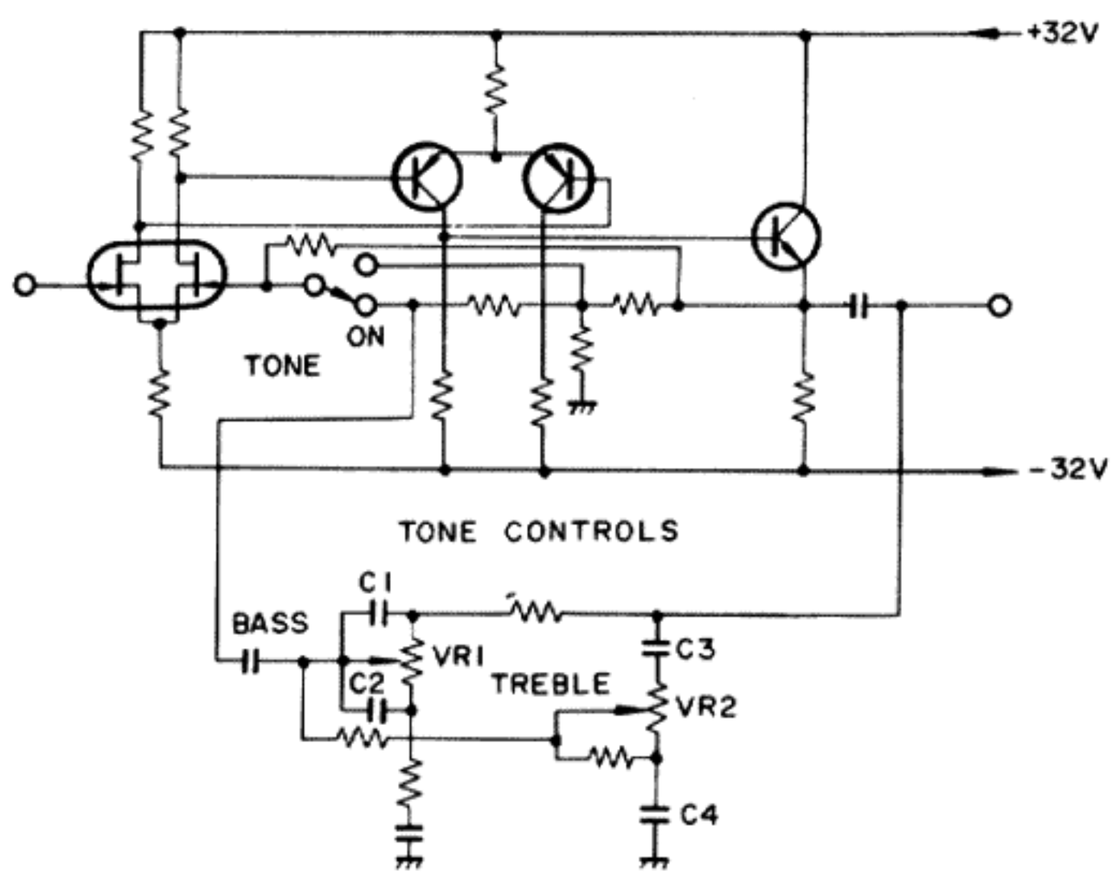

Fig. 2 Basic circuit of tone amplifier

4.3 POWER AMPLIFIER

Amplifier Circuitry

The basic circuit arrangement of power amplifier is shown in Fig. 3. The first stage is a differential amplifier (Q_1), the load circuit of which is a current mirror employing an NPN twin transistor (Q_3). The current mirror provides push-pull operation in this stage, which serves to cancel even numbered harmonics and further increase gain.

The pre-driver stage (Q_7, Q_9) is a Darlington connection the load circuit of which employs a constant-current source (D_5, Q_5) resulting in a high voltage gain.

The power stage bias voltage is supplied by the NSA circuit. The NSA circuit provides non-switching operation in the power stage (refer to "NSA Circuit").

The power stage is a Darlington connection pure complementary SEPP circuit, employing an S.L. RET (Super Linearity Ring Emitter Transistor). The RET is a kind of IC consisting of a number of small transistor being connected in parallel via an emitter resistor. This provides excellent high frequency characteristics comparable to those of a small-signal transistor. Furthermore, because there is no time constant in the NFB circuit in the low-frequency region, amplification is possible down to DC (DC inputs will be cut off, however, by the output coupling capacitor of the tone amplifier.).

The circuit features described above provide an extremely wide power frequency range (65W + 65W, 10Hz to 50kHz, THD 0.02%, 8Ω).

Drive Voltage Limiter (Fig. 3)

When the power stage of an amplifier saturates as a result of overdriving, the NFB will cease to function normally and the amplifier will become extremely unstable. This is prevented here by diodes (D_{17}, D_{19}) and resistors (R_{29}, R_{31}) in the following manner. The NSA circuit shifts the DC level of the input signal to bias the power output stage. R_{29} (R_{31}) further shifts the DC level so as to make D_{17} (D_{19}) conductive in the presence of an overdrive of magnitude greater than $+B_1$ ($-B_1$), thus clipping the overdrive signal.

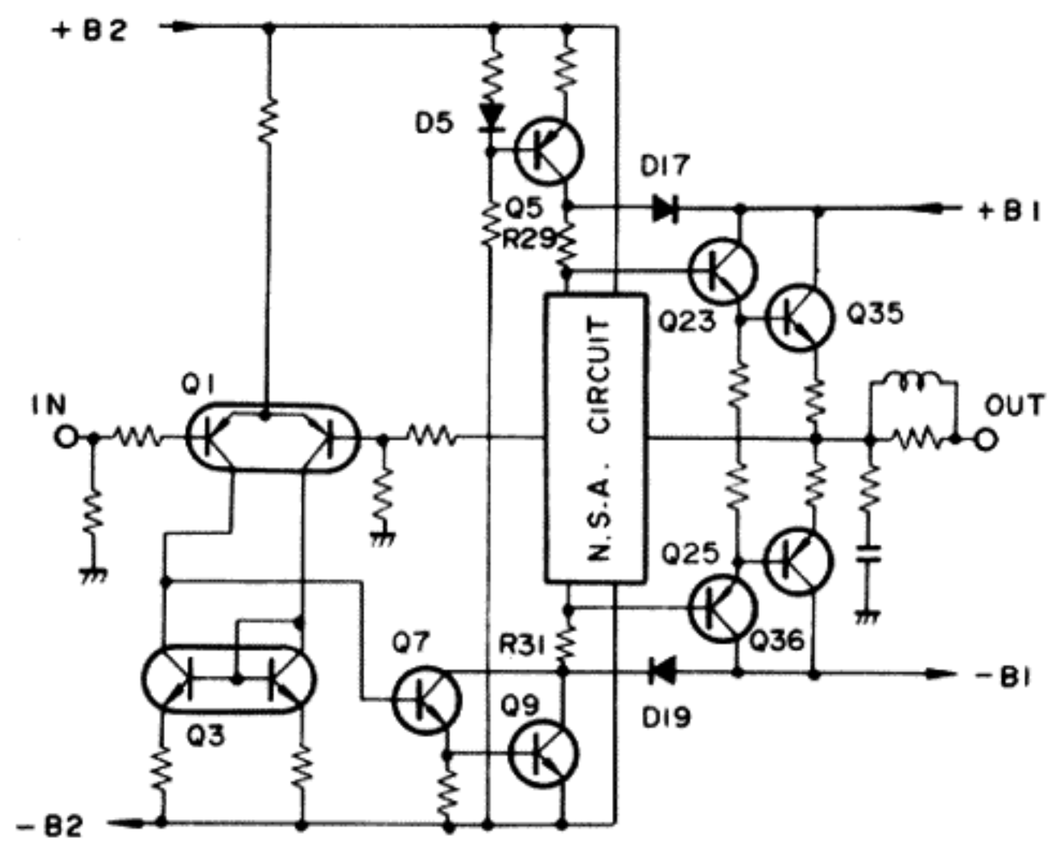

Fig. 3 Basic circuit of power amplifier

NSA (Non-Switching Amplifier) Circuit

By operating the power stage only within the active region (no possible cut-off) and with minimum idle current, the NSA circuit prevents the generation of switching distortion and reduces heat loss.

Operating Principle

Since idle current flows through normal class B SEPP power stages (see Fig. 4) when no signal is applied, the DC level is shifted by D and VR by a fixed amount (with the voltage across points (P) and (R) serving as a bias). The voltages across points (P) and (Q), and (Q) and (R) at this time will be equal. When the positive portion of a signal

is applied to this circuit, the power stage current on the NPN side is increased, resulting in the voltage across points (P) and (Q) also being increased. However, since the voltage across points (P) and (R) is practically constant (see note), the voltage across points (P) and (R) (PNP power stage bias) will be decreased, resulting in the PNP power stage being cut off.

The NSA circuit increases the voltage across points (P) and (R) by the same amount as the voltage increase across points (P) and (Q), thereby cancelling the voltage decrease across points (Q) and (R), and preventing the PNP power stage from being cut off.

This NSA circuit is outlined in Fig. 5. When there is no signal applied to the circuit, Q_1 and Q_2 are almost cut off, while Q_3 and Q_4 will be on. The voltage across the collector and base of both of these transistors (Q_3 and Q_4) at this time may be disregarded. Consequently, with the power stage bias circuit consisting of 4 PN junctions formed by Q_3, D_3, and Q_4, and VR_1, this circuit is equivalent to the previous circuit shown in Fig. 4.

With R_1 and D_1 ensuring a constant flow of current, the base of Q_1 and point (Q) may be brought to the same level (see Fig. 6) on an AC basis (level fluctuations due to the signal) by a simple shift in DC level. Furthermore, Q_1 may be considered emitter-follower with R_3 as the emitter resistance.

When the voltage across points (P) and (Q) is increased by the positive portion of the signal applied to this circuit, it becomes the input signal of this emitter-follower (Q_1). Since the emitter-follower voltage gain is practically 1, a voltage more or less equal to that of the input signal (that is, the voltage increase across points (P) and (Q) is produced at R_3. And the R_3 voltage is the voltage applied across the base and collector of Q_3 which forms part of the power stage bias circuit. So the bias voltage applied to Q_3 will be in excess by the same amount that the voltage across points (P) and (Q) is increased (by positive portion of the signal) above the voltage level when no signal is being applied. Consequently, the increase in voltage across points (P) and (Q) cancels the decrease in voltage across points (Q) and (R), thereby maintaining the idle current without cutting the PNP power stage off (noting that there

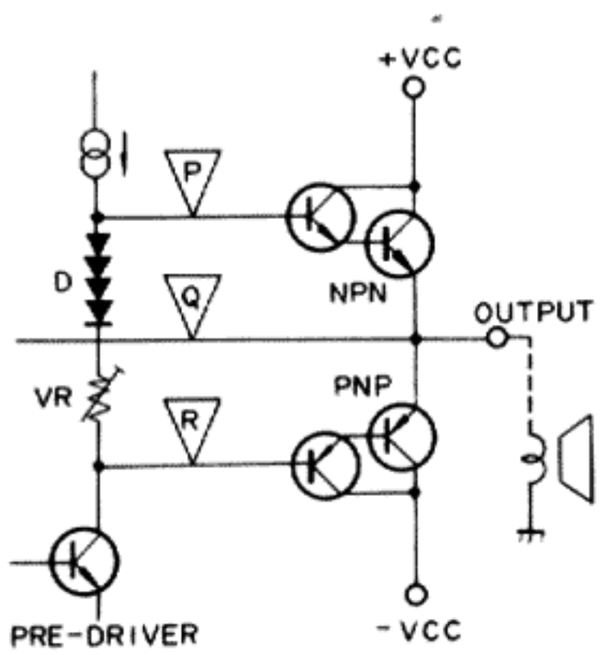

Fig. 4 Normal class B SEPP power stage

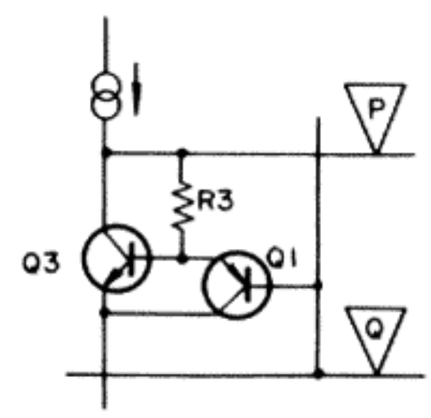

Fig. 6 NSA circuit

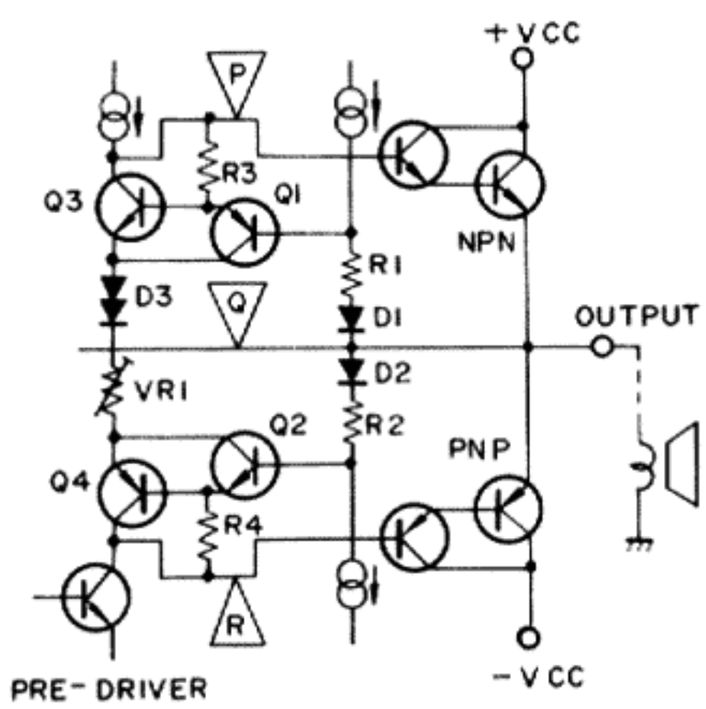

Fig. 5 Outline of NSA circuit

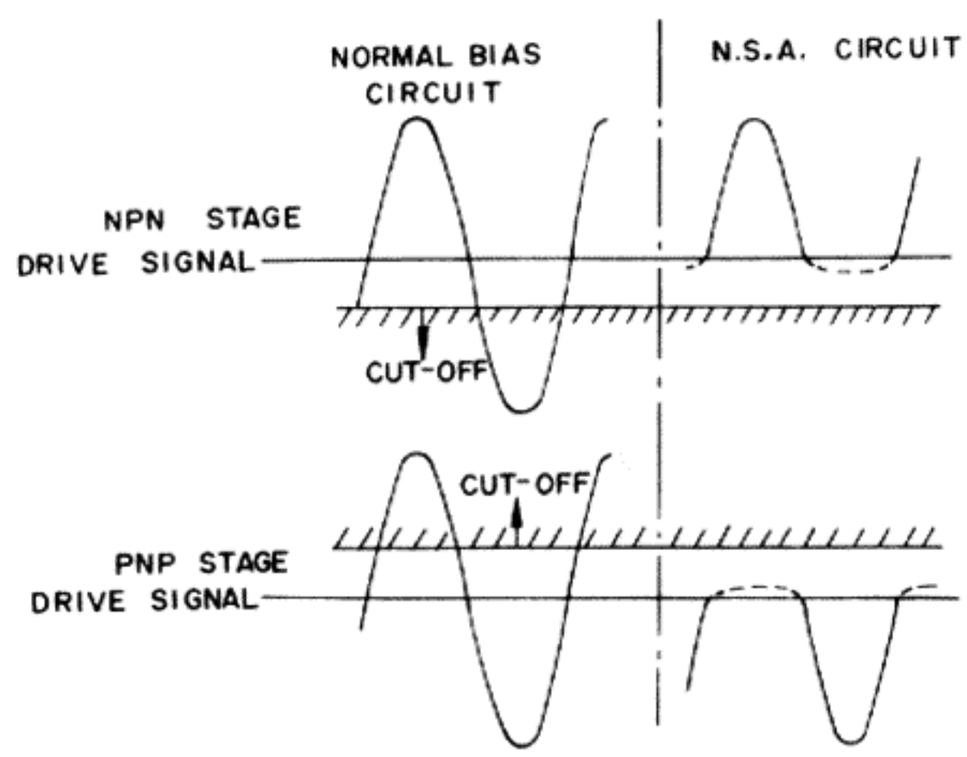

Fig. 7 Driving signal of power stage

actually is a slight decrease in current). For the negative portions of the signal, Q_3 and Q_4 are operated in the same manner, thereby preventing the NPN power stage from being cut off.

In other words, the NSA circuit acts to prevent any "power stage cut-off" signals from being applied to the power stage (see Fig. 7).

Note:
The pre-driver current actually decreases when the positive portion of the signal is applied, resulting in a decrease in the voltage across points (P) and (R).

4.4 INDICATOR CIRCUIT

The SA-7800 output power and function indicators feature fluorescent indicator tubes (FL tubes). In these tubes, thermionic emissions from the cathode are accelerated into the fluorescent substance of the segmental anodes, resulting in the emission of light. These tubes are used to indicate numerals, letters, and other symbols.

An outline of the FL tube drive circuit is shown in Fig. 8. The output circuit signal is first passed through a low-pass filter and a compressor circuit before being applied to pin no.6 (4) of the IC (TA7318P-A). The compressor circuit makes use of the non-linearity of the rising portion of the diode's Vd — Id characteristics to contract the signal dynamic range by 20dB. The IC contains a detector circuit, compressor (40dB), and peak hold circuit for both left and right channels. The dynamic range of the signal is thus contracted by 60dB to obtain a "peak held" DC voltage.

The output power indicator segments of the FL tube are driven by the HA12010 ICs (one for each channel) equipped with 12 pairs of differential amplifiers. These amplifiers are biased at increasing levels, so each amplifier will commence to operate separately as the input level increases. And since these amplifiers apply the voltages to the output power indicator segments, each successive segment will light up in turn as the input level rises.

The function indicators are lit up as a result of a voltage being applied to the corresponding function indicator segment according to the selected positions of the FUNCTION and TAPE MONITOR switches.

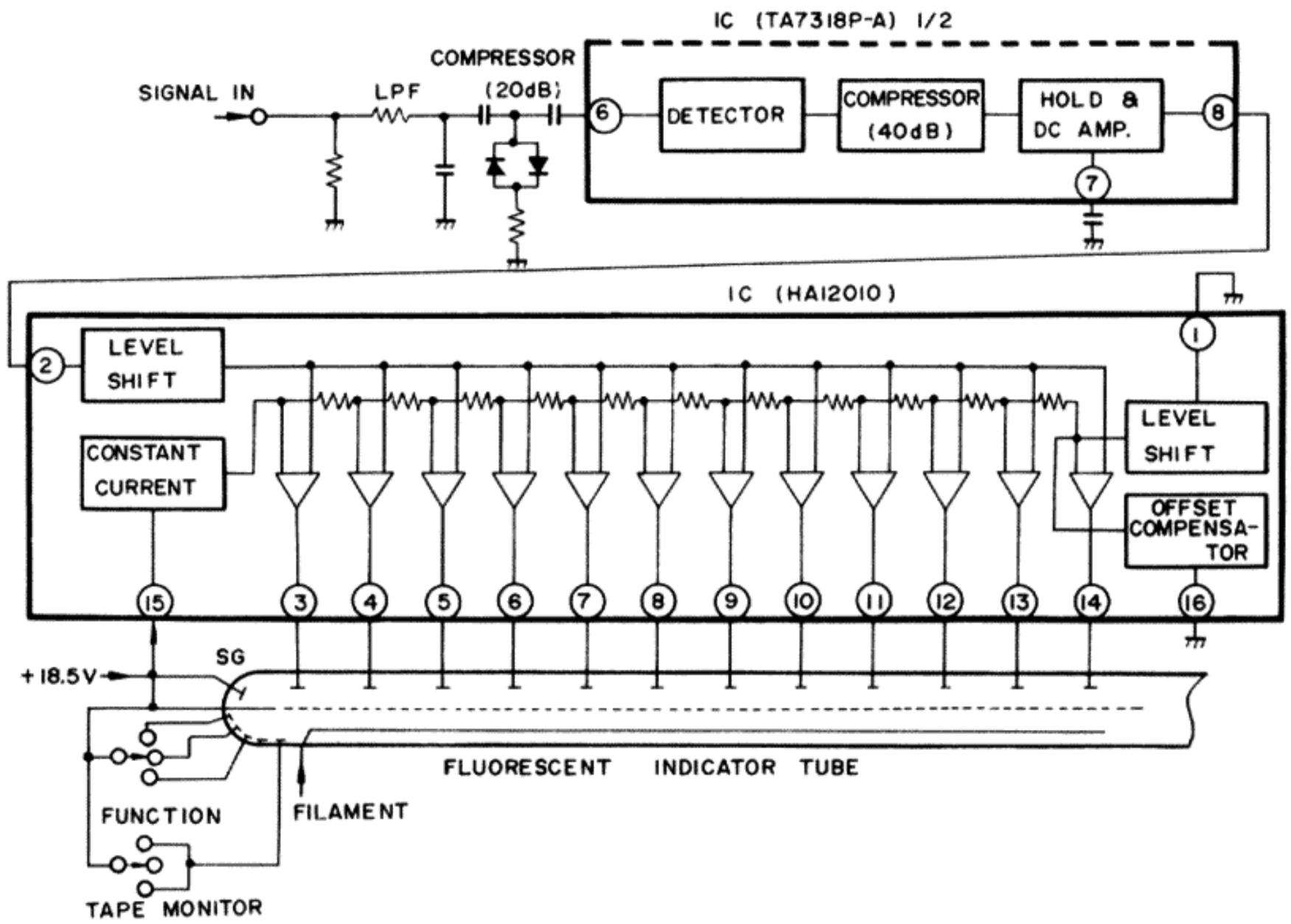

Fig. 8 Indicator circuit

4.5 PROTECTION CIRCUIT

The purpose of this circuit is to protect the speakers and the power amplifiers. The relay in the output circuit is automatically opened in any of the following cases:

1. During the "transient operations" when the power supply is turned on and off.
2. Upon detection of an overload, caused by a short circuit in the load.
3. Upon detection of a DC voltage in the output caused by component failure or accident.

Muting Operation When Power Supply is Turned On and Off

With reference to Fig. 9 when the power supply is turned on, Q_3 turns off due to $-B_1$ (The time constant of the $-B_1$ circuit is very small.). If there is no input (DC) on Q_5 and Q_6, they will be off, and the timing capacitor C_1 charges up through R_8 and thus Q_4 turns on. When Q_4 conducts, the relay operates, and the output muting on the power amplifier will be removed.

When the power supply is turned off, $-B_1$ will abruptly decay, and Q_3 will conduct owing to the residual component of $+B_1$. As a result, C_1 will rapidly discharge, Q_4 will cease to conduct, whereupon the relay will become de-energized and restore muting.

Overload Detector

The overload detector circuit incorporates the load (RL) in one side of a Wheatstone bridge (see Fig. 10). The base and emitter of a sensing transistor (Q_1) are connected to the opposite corners of the bridge, so if RL decreases, Q_1 will become forward biased. If RL falls below a prescribed value, will turn on, thereby passing a current through R_3 and D_2. Due to the voltage difference generated across R_3, Q_2 will become forward biased, and consequently turn on. Q_3 base potential rises and Q_3 turns on. C_1 will rapidly discharge. As consequence, Q_4 will turn on and the relay will become de-energized, thus causing the output circuit to open.

DC Voltage Detector

The output circuit is connected to the Q_6 emitter and Q_5 base via a low-pass filter (R_9, C_2). Any DC voltages appearing the output circuit of the power amplifier, it will be applied to the Q_6 emitter and the Q_5 base. If the voltage is negative, Q_6 turns on. C_1 will rapidly discharge. If the voltage is positive, Q_5 turns on. C_1 will rapidly discharge. As consequence, Q_4 will turn on and the relay will become de-energized, thus causing the output circuit to open.

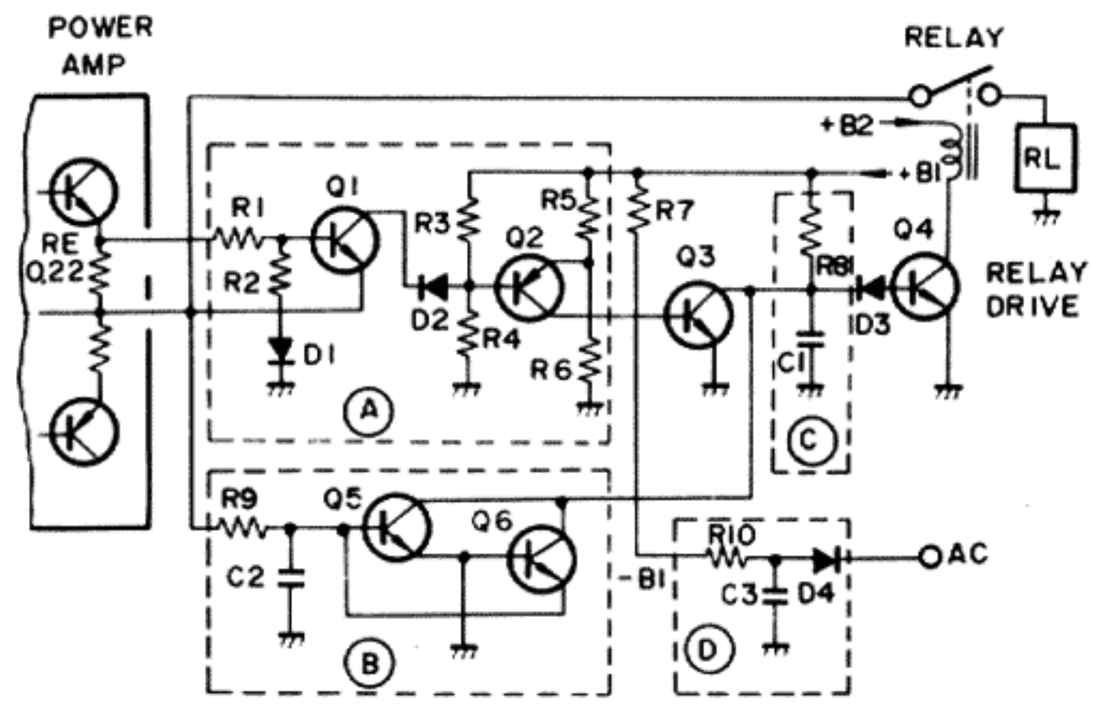

Ⓐ Overload detector
Ⓑ DC voltage detector
Ⓒ Power ON muting
Ⓓ Power OFF muting

Fig. 9 Protection circuit

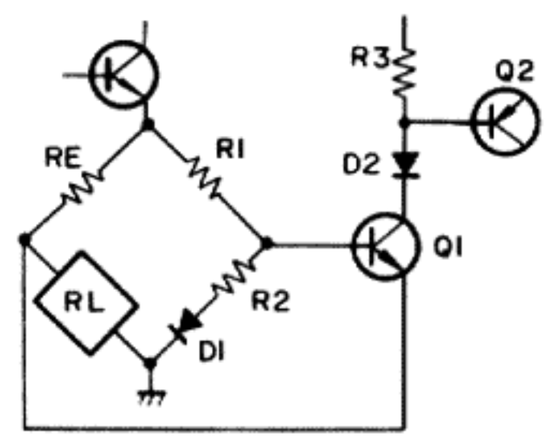

Fig. 10 Overload detector

5. ADJUSTMENTS

Idle Current Adjustment (Fig. 11)

1. Turn VR_5 to VR_8 fully counter-clockwise.
2. Do not connect load to speaker output terminals.
3. Set VOLUME control to minimum (fully counter-clockwise).
4. Turn the POWER switch ON.
5. Connect a DC voltmeter to the TP terminals (L ch: TP1 ⊕ and TP2 ⊖ , R ch: TP4 ⊕ and TP3 ⊖) of the power amp assembly.
6. Adjust the semifixed resistor (L ch: VR_5, R ch: VR_6) for a reading of 53mV at the DC voltmeter.
7. Adjust the semifixed resistor (L ch: VR_7, R ch: VR_8) for a reading of 66mV at the DC voltmeter.

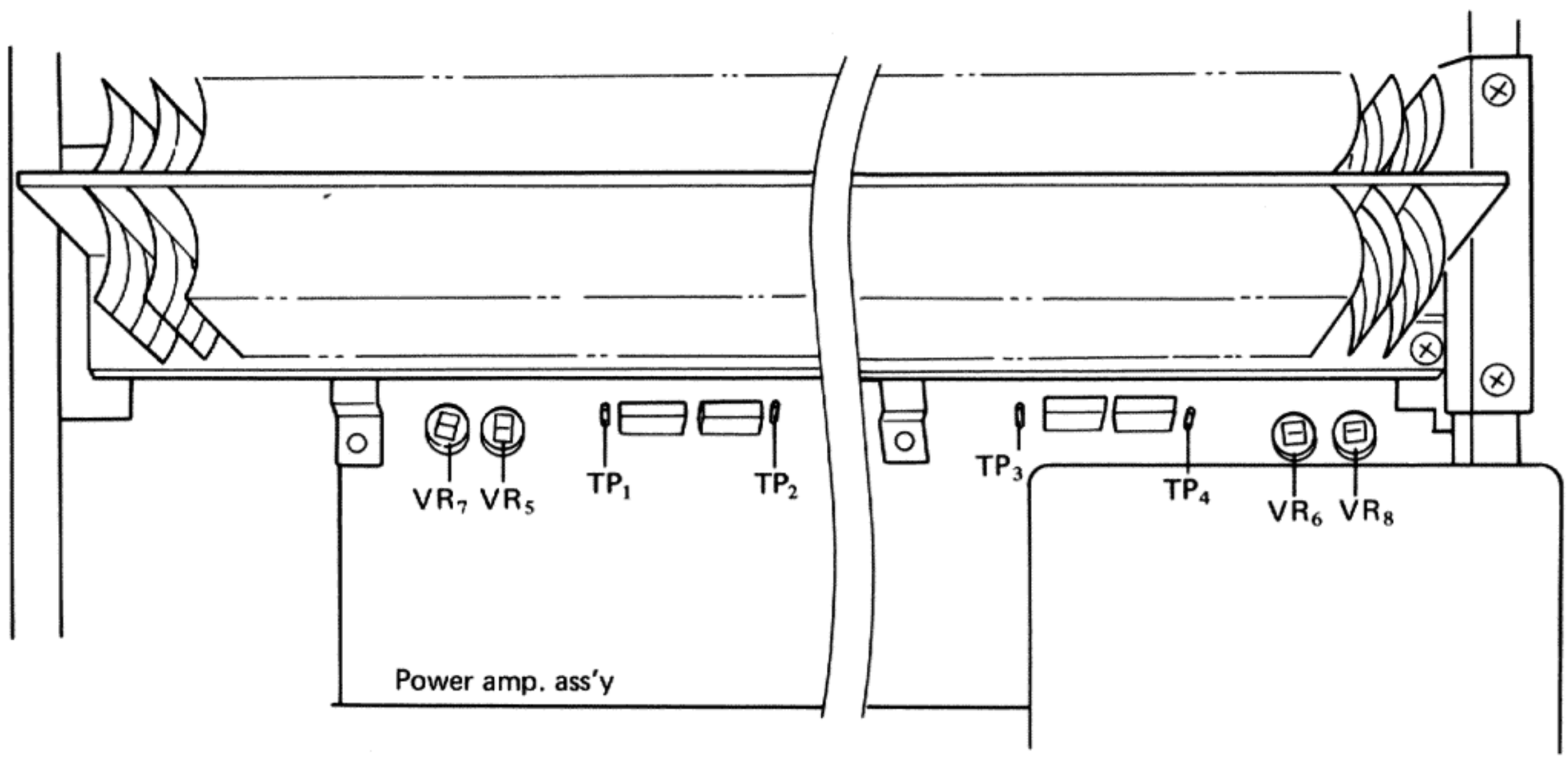

Fig. 11

Output Indicator Adjustment (Fig. 12)

1. Set the TONE switch OFF position.
2. Set the SPEAKERS selector to the A position, and connect an 8Ω resistor and AC voltmeter to the speaker output terminals.
3. Set the FUNCTION switch to the AUX position, and apply a 1kHz, 150mV signal to the AUX input terminals.
4. Adjust the VOLUME control for an AC voltmeter reading of 8.9V (10W/8Ω).
5. Adjust the semifixed resistor (L ch: VR_1, R ch: VR_2) for a reading of 10W at the output indicator.

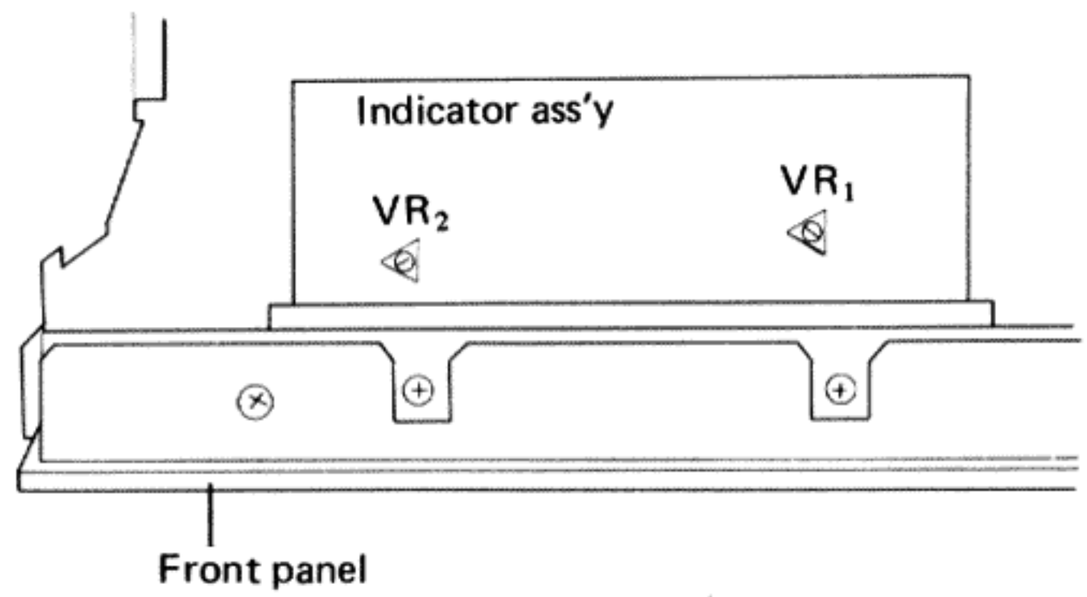

Fig. 12

6. DISASSEMBLY

Wooden Case

Remove the two screws (A) on each side of the wooden case.

Bottom Plate

Remove the eight screws (B) to detach the bottom plate.

Front Panel

Remove the all control knobs. Remove the two screws (C) and two nuts (D) from the front panel.

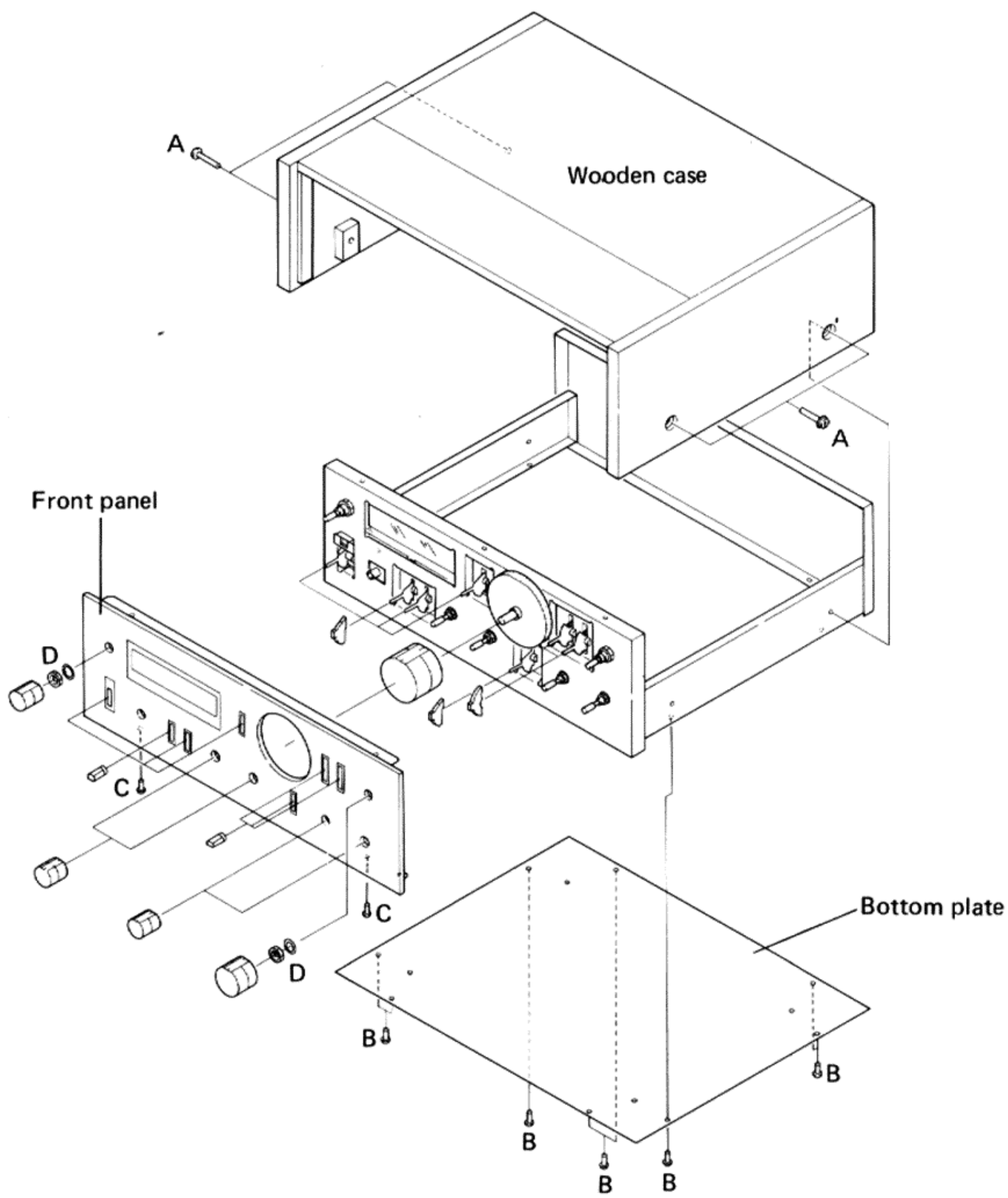

7. PARTS LOCATION

- *The ⚠ mark found on some component parts indicates the importance of the safety factor of the part. Therefore, when replacing, be sure to use parts of identical designation.*

Front Panel View

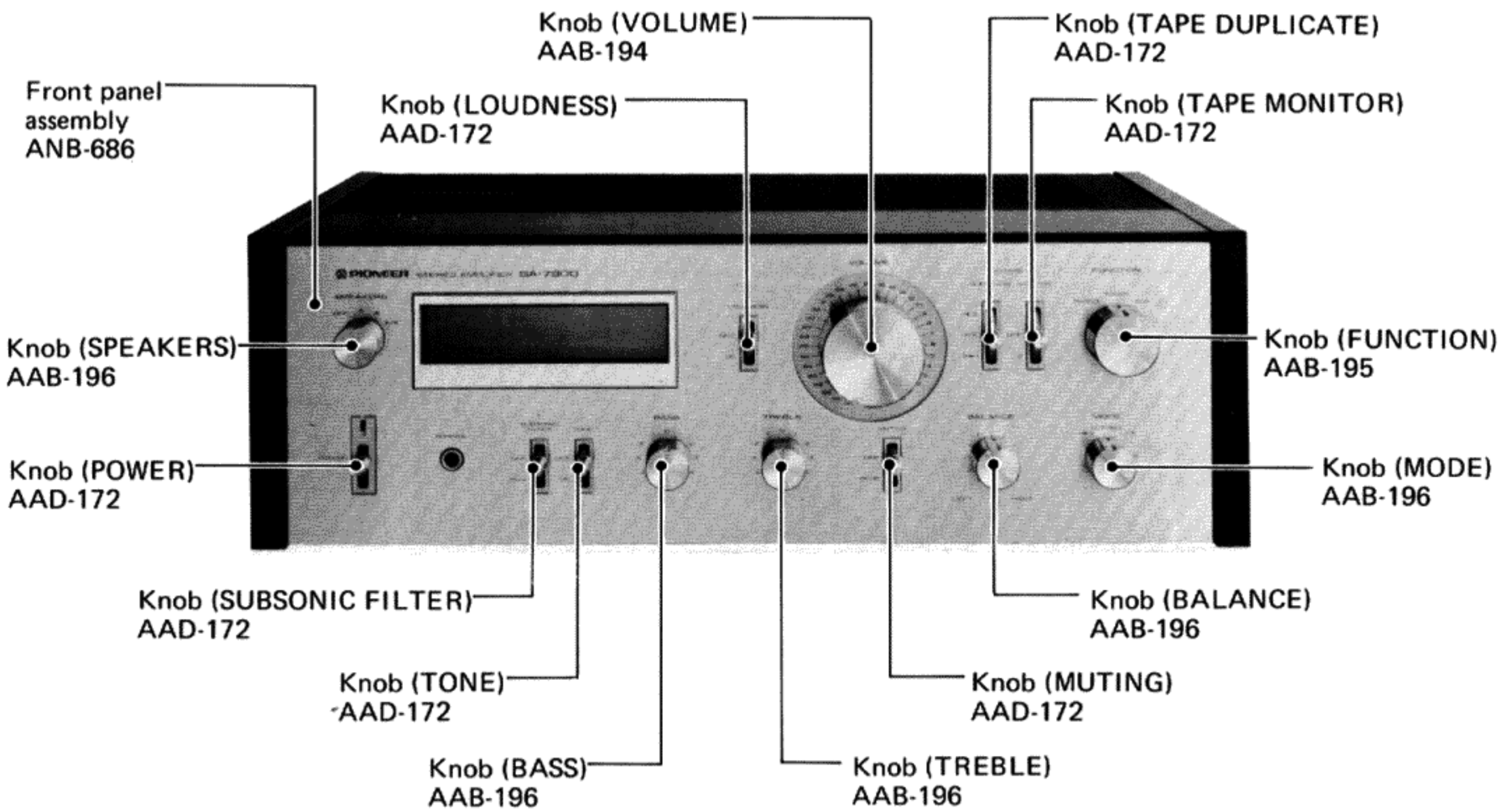

Front View with Front Panel Removed

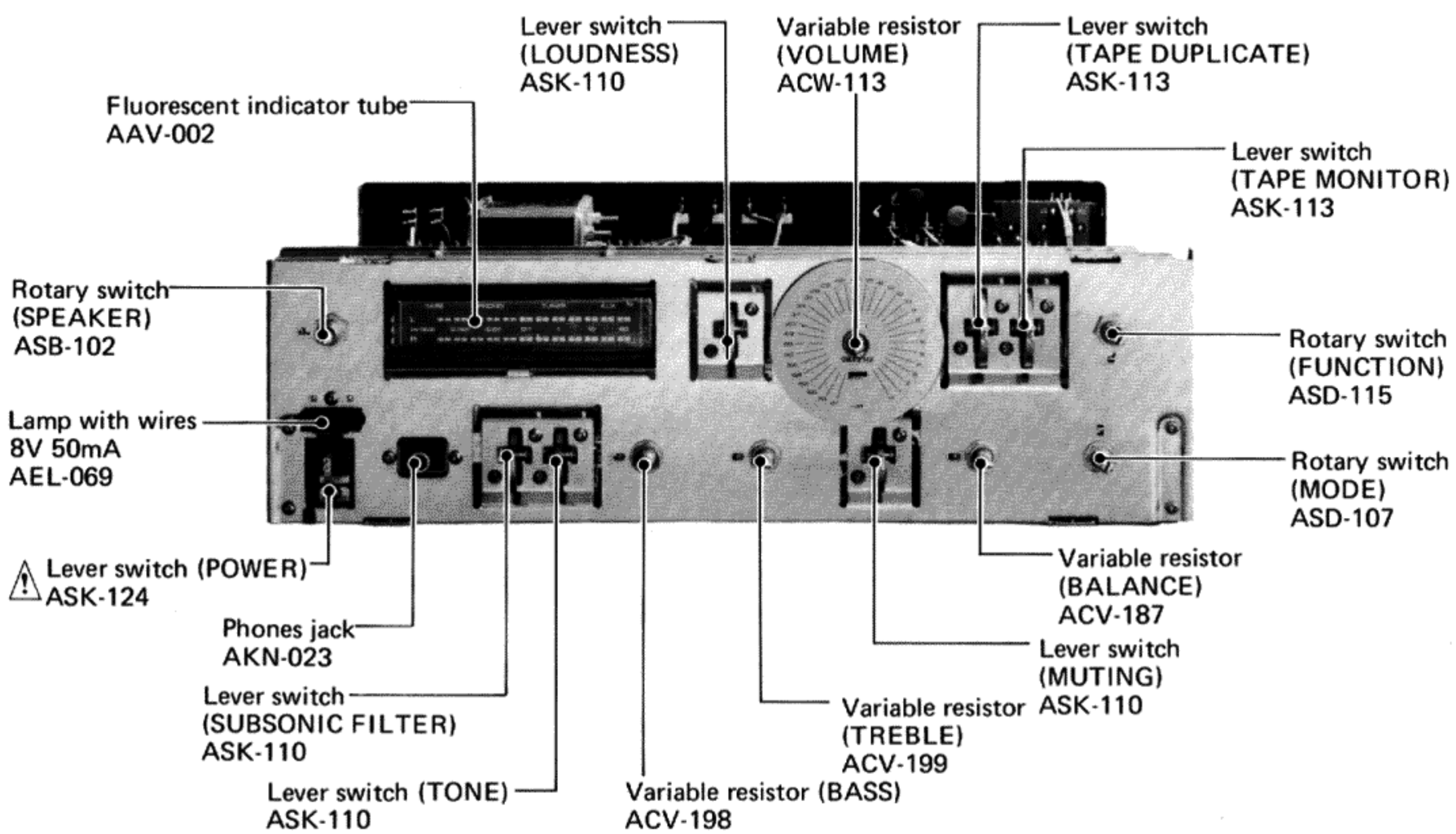

Top View with Top Cover Removed

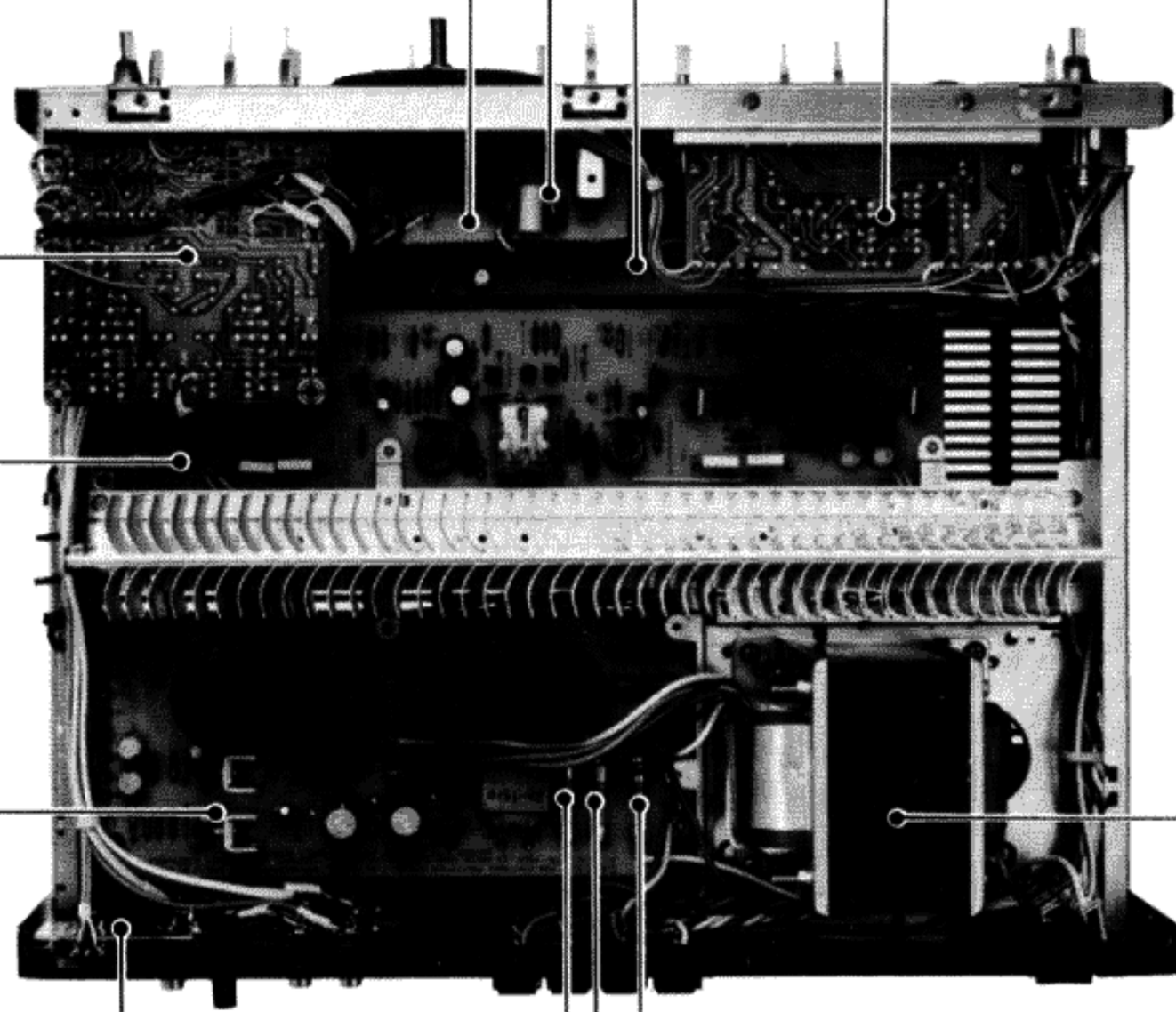

Rear Panel View

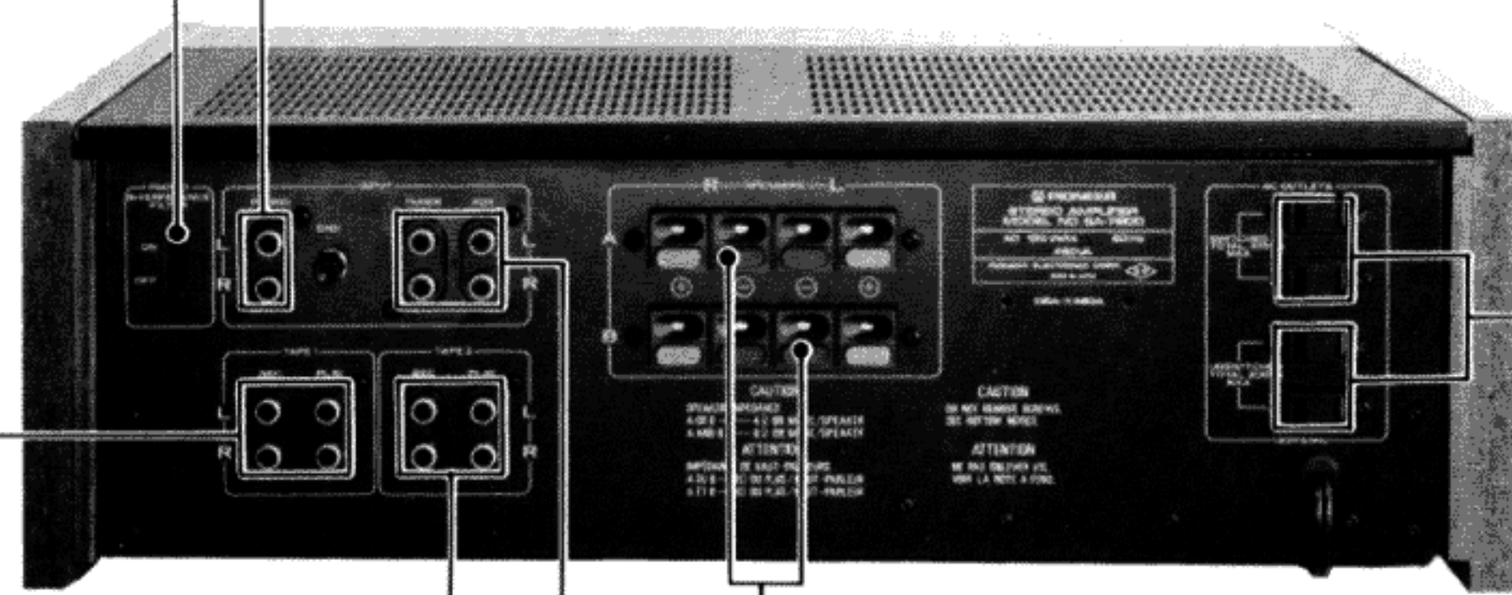

8. EXPLODED VIEW

NOTES:
- ▭ *marked parts cannot be supplied.*
- *The ⚠ mark found on some component parts indicates the importance of the safety factor of the part. Therefore, when replacing, be sure to use parts of identical designation.*

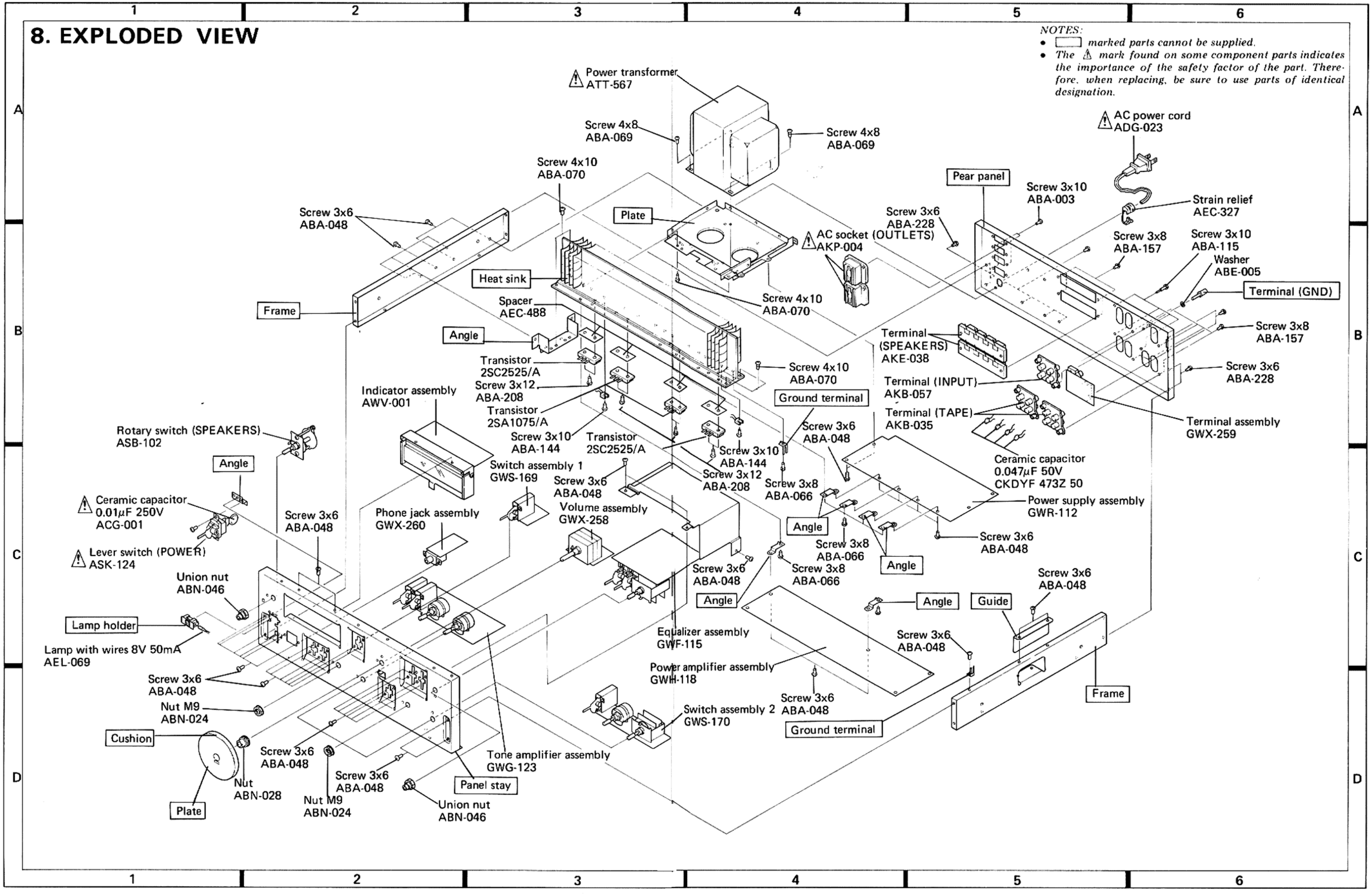

NOTES:

- ▭ *marked parts cannot be supplied.*
- *The ⚠ mark found on some component parts indicates the importance of the safety factor of the part. Therefore, when replacing, be sure to use parts of identical designation.*

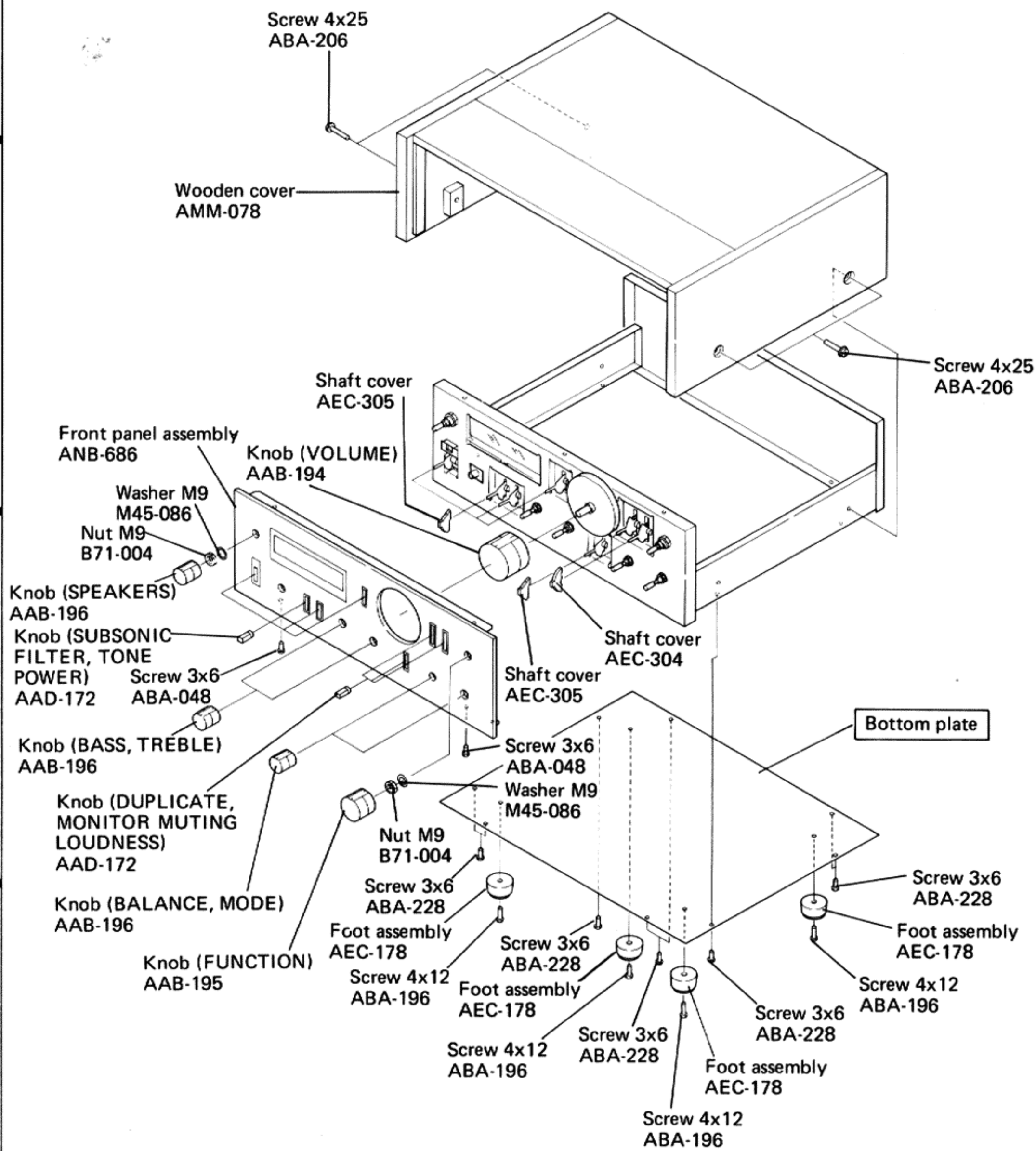

9. SCHEMATIC DIAGRAMS, P.C. BOARD PATTERNS AND PARTS LIST

NOTES:

- *When ordering resistors, first convert resistance values into code form as shown in the following examples.*

  Ex. 1 When there are 2 effective digits (any digit apart from 0), such as 560 ohm and 47k ohm (tolerance is shown by J = 5%, and K = 10%).

560Ω	*56 × 10¹*	*561*	*RD¼PS 5 6 1 J*
47kΩ	*47 × 10³*	*473*	*RD¼PS 4 7 3 J*
0.5Ω	*0R5*		*RN2H 0 R 5 K*
1Ω	*010*		*RSIP 0 1 0 K*

  Ex. 2 When there are 3 effective digits (such as in high precision metal film resistors).

5.62kΩ	*562 × 10¹*	*5621*	*RN¼SR 5 6 2 1 F*

- *The ⚠ mark found on some component parts indicates the importance of the safety factor of the part. Therefore, when replacing, be sure to use parts of identical designation.*

9.1 MISCELLANEA

Miscellaneous Parts

CAPACITORS

Part No.	Symbol & Description		
CKDYF 473Z 50	C1–C5		
⚠ ACG-001	C6	Ceramic	0.01/250V
CQMA 103K 400	C7		

SEMICONDUCTORS

Part No.	Symbol & Description
2SC2525/A	Q1, Q2
2SA1075/A	Q3, Q4

SWITCHES

Part No.	Symbol & Description	
ASB-102	S10	Rotary (SPEAKERS)
⚠ ASK-124	S11	Lever (POWER)

LAMP AND FUSES

Part No.	Symbol & Description	
AEL-069	PL1	Lamp with wires 8V 50mA
⚠ AEK-109	FU1	Fuse 6A
⚠ AEK-111	FU2, FU3	Fuse 0.8A

P.C. BOARD ASSEMBLIES

Part No.	Description
GWH-118	Power amplifier assembly
GWR-112	Power supply assembly
GWX-258	Volume assembly
GWS-169	Switch assembly 1
GWX-259	Terminal assembly
GWX-260	Phone jack assembly
GWF-115	Equalizer assembly
GWG-123	Tone amplifier assembly
GWS-170	Switch assembly 2
AWV-001	Indicator assembly

OTHERS

Part No.	Symbol & Description	
⚠ ATT-567	T1	Power transformer
AKB-057		Terminal (INPUT)
AKB-035		Terminal (TAPE)
AKE-038		Terminal (SPEAKERS)
⚠ AKP-004		AC socket (OUTLETS)
⚠ ADG-023		AC power cord

9.2 SCHEMATIC DIAGRAM

External Appearance of Transistors and ICs

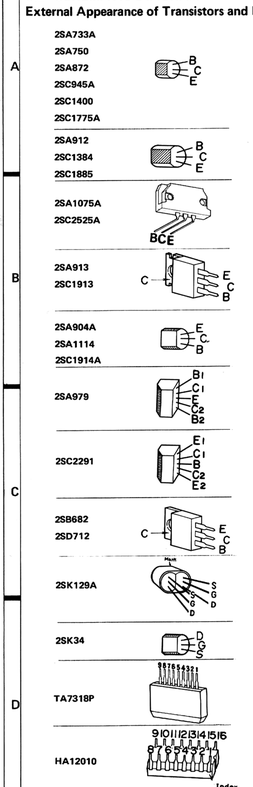

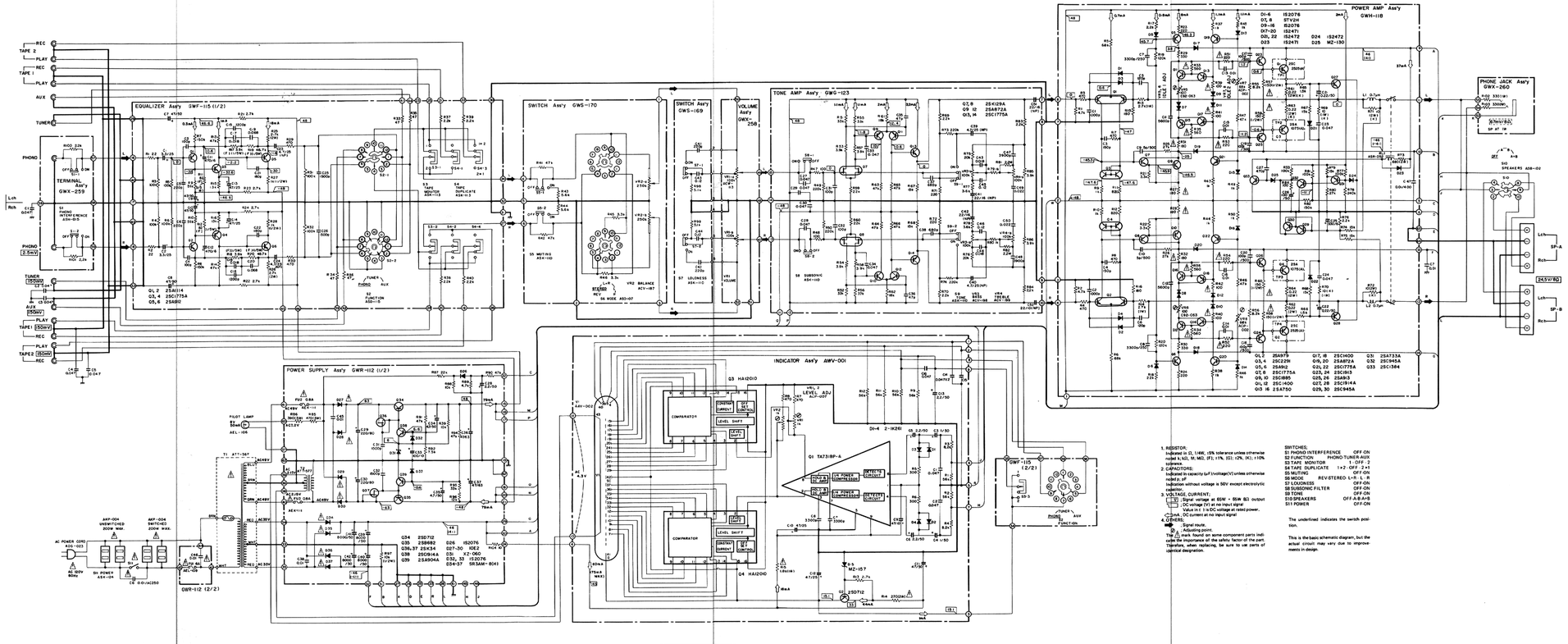

1. RESISTOR:
Indicated in Ω, 1/4W, ±5% tolerance unless otherwise noted k: kΩ, M: MΩ, (F): ±1%, (G): ±2%, (K): ±10% tolerance
2. CAPACITORS:
Indicated in capacity (μF) voltage(V) unless otherwise noted p: pF
Capacitor without voltage is 50V except electrolytic capacitor
3. VOLTAGE, CURRENT:
Signal voltage at 65W + 65W 8Ω output
DC voltage (V) at no input signal
Value in ( ) is DC voltage at rated power.
CURR.: DC current at no input signal
4. OTHERS:
Signal route.
Adjusting point.
The ⚠ mark found on some component parts indicates the importance of the safety factor of the part. Therefore, when replacing, be sure to use parts of identical designation.

SWITCHES:

S1 PHONO INTERFERENCE	OFF-ON
S2 FUNCTION	PHONO-TUNER-AUX
S3 TAPE MONITOR	OFF-1-2
S4 TAPE DUPLICATE	1→2 OFF-2→1
S5 MUTING	OFF-ON
S6 MODE	REVERSE L→R-L-R
S7 LOUDNESS	OFF-ON
S8 SUBSONIC FILTER	OFF-ON
S9 TONE	OFF-ON
S10 SPEAKERS	OFF-A-B-A+B
S11 POWER	OFF-ON

The underlined indicates the switch position.

This is the basic schematic diagram, but the actual circuit may vary due to improvements in design.

9.3 P.C. BOARD CONNECTION DIAGRAM

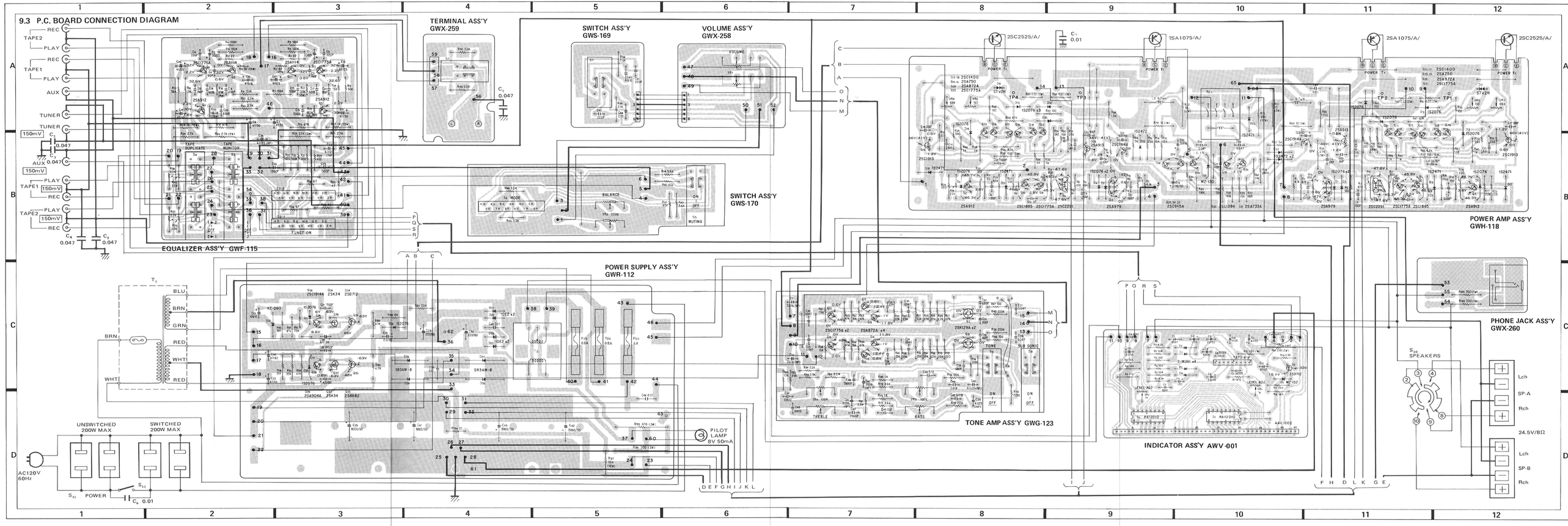

9.4 EQUALIZER ASSEMBLY (GWF-115)

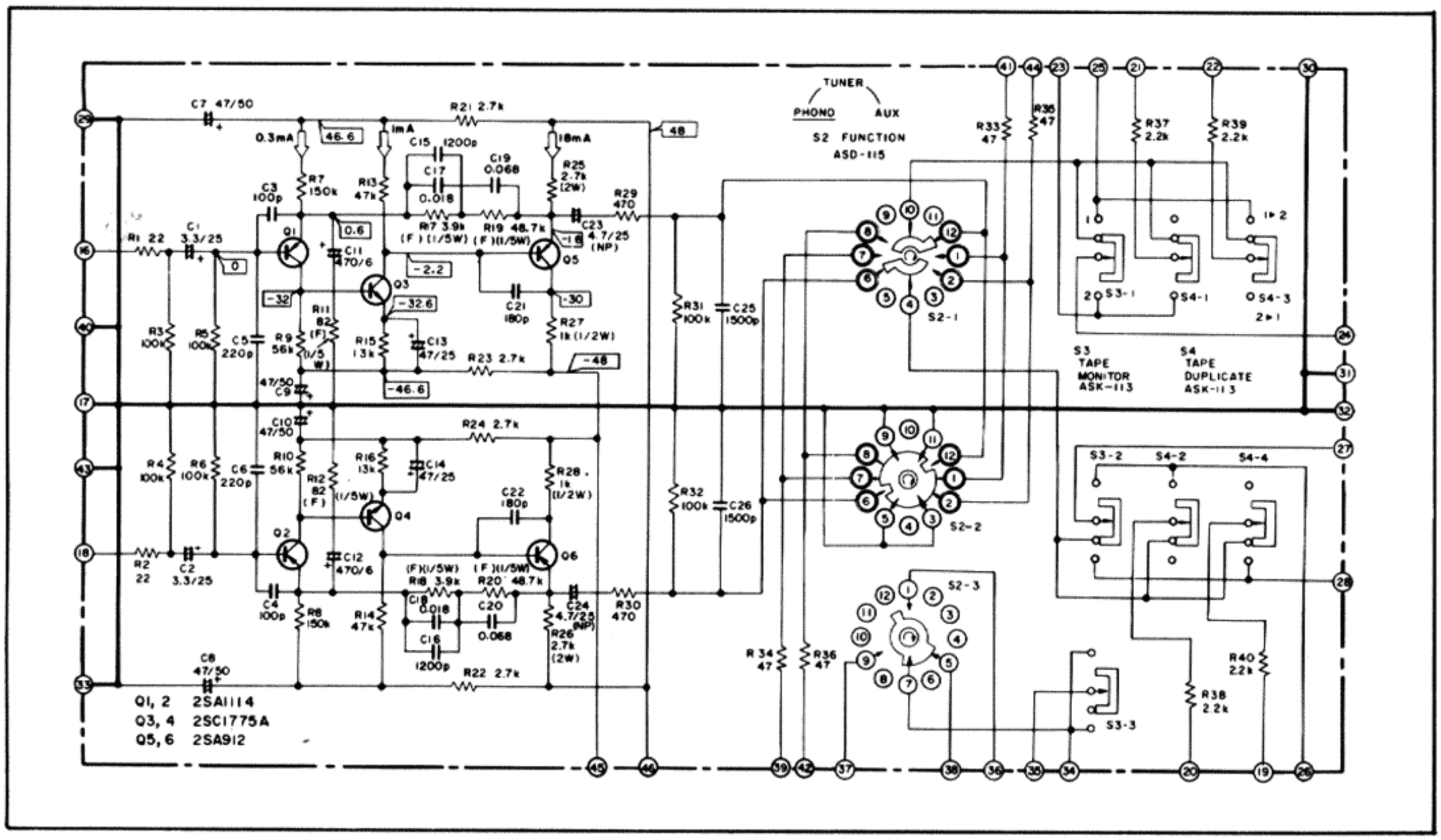

Parts List

CAPACITORS

Part No.	Symbol & Description
CEANL 3R3M 25	C1, C2
CCDSL 101K 50	C3, C4
CCDSL 221K 50	C5, C6
CEA 470P 50	C7–C10
CEA 471P 6	C11, C12
CEA 470P 25	C13, C14
CQSA 122G 50	C15, C16
CQPA 183G 50	C17, C18
CQPA 683G 50	C19, C20
CCDSL 181K 50	C21, C22
ACH-318	C23, C24 Electrolytic 4.7/25V
CQMA 152J 50	C25, C26

Note: When ordering resistors, convert the resistence value into code form, and then rewrite the part no. as before.

RESISTORS

Part No.	Symbol & Description
RD¼PM □□□ J	R1–R10, R13–R16, R21–R24, R29–R40
RN⅕SQ □□□□ F	R11, R12, R17, R18, R19, R20
RS2P □□□ J	R25, R26
RD½PS □□□ J	R27, R28

SEMICONDUCTORS

Part No.	Symbol & Description
2SA1114	Q1, Q2
2SC1775A	Q3, Q4
2SA912	Q5, Q6

SWITCHES

Part No.	Symbol & Description	
ASD-115	S2	Rotary (FUNCTION)
ASK-113	S3	Lever (TAPE MONITOR)
ASK-113	S4	Lever (TAPE DUPLICATE)

9.5 TONE AMPLIFIER ASSEMBLY (GWG-123)

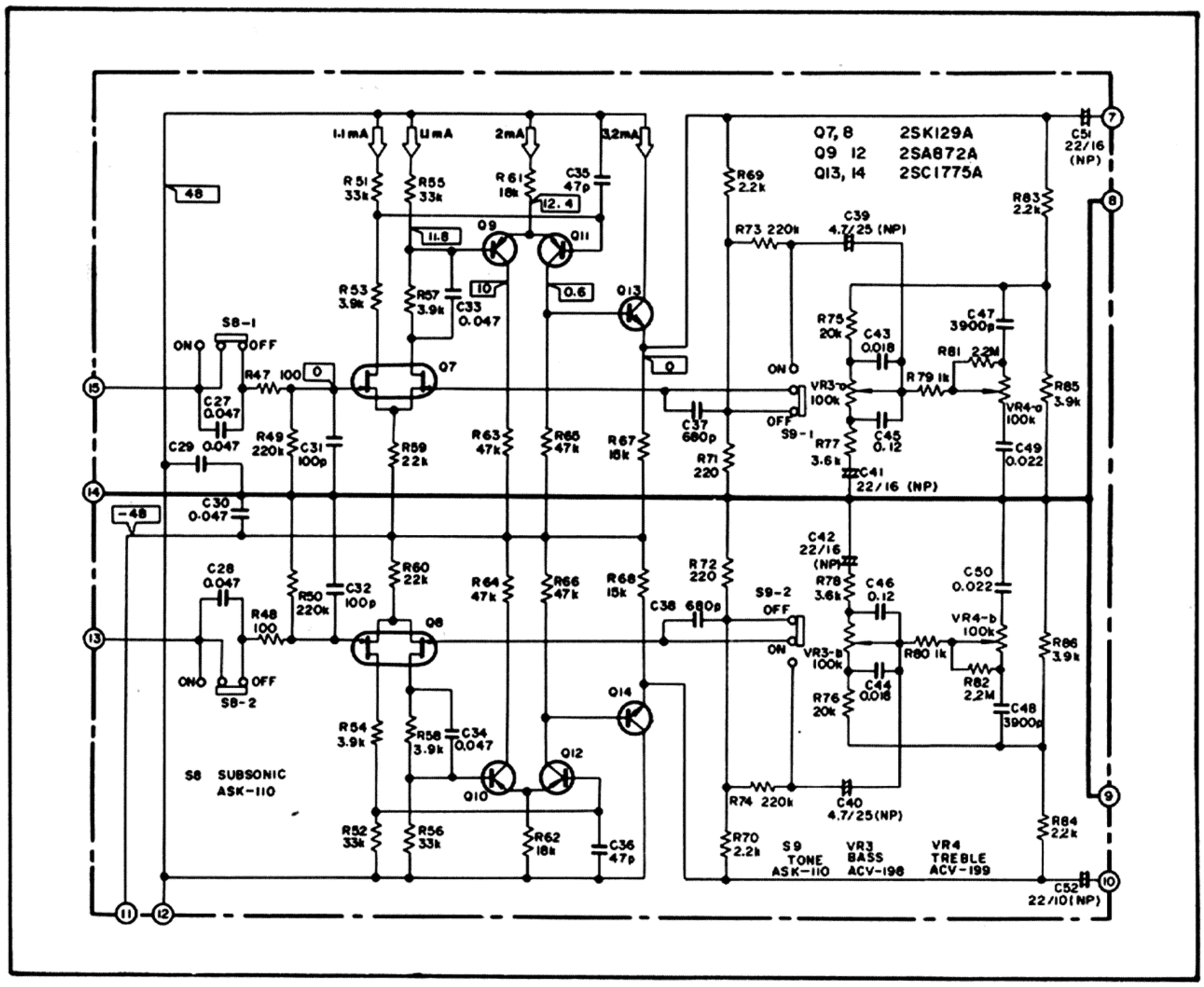

Parts List

CAPACITORS

Part No.	Symbol & Description		
CQMA 473K 50	C27, C28, C33, C34		
CKDYF 473Z 50	C29, C30		
CCDSL 101K 50	C31, C32		
CCDSL 470K 50	C35, C36		
CKDYB 681K 50	C37, C38		
ACH-318	C39, C40	Electrolytic	4.7/25V
ACH-330	C41, C42, C51, C52	Electrolytic	22/16V
CQMA 183K 50	C43, C44		
CQMA 124K 50	C45, C46		
CQMA 392K 50	C47, C48		
CQMA 223K 50	C49, C50		

Note: When ordering resistors, convert the resistance value into code form, and then rewrite the part no. as before.

RESISTORS

Part No.	Symbol & Description	
RD¼PM □□□ J	R47–R86	
ACV-198	VR3	Variable (BASS)
ACV-199	VR4	Variable (TREBLE)

SEMICONDUCTORS

Part No.	Symbol & Description
2SK129A	Q7, Q8
2SA872A	Q9–Q12
2SC1775A	Q13, Q14

SWITCHES

Part No.	Symbol & Description	
ASK-110	S8	Lever (SUBSONIC)
ASK-110	S9	Lever (TONE)

9.6 TERMINAL ASSEMBLY (GWX-259)

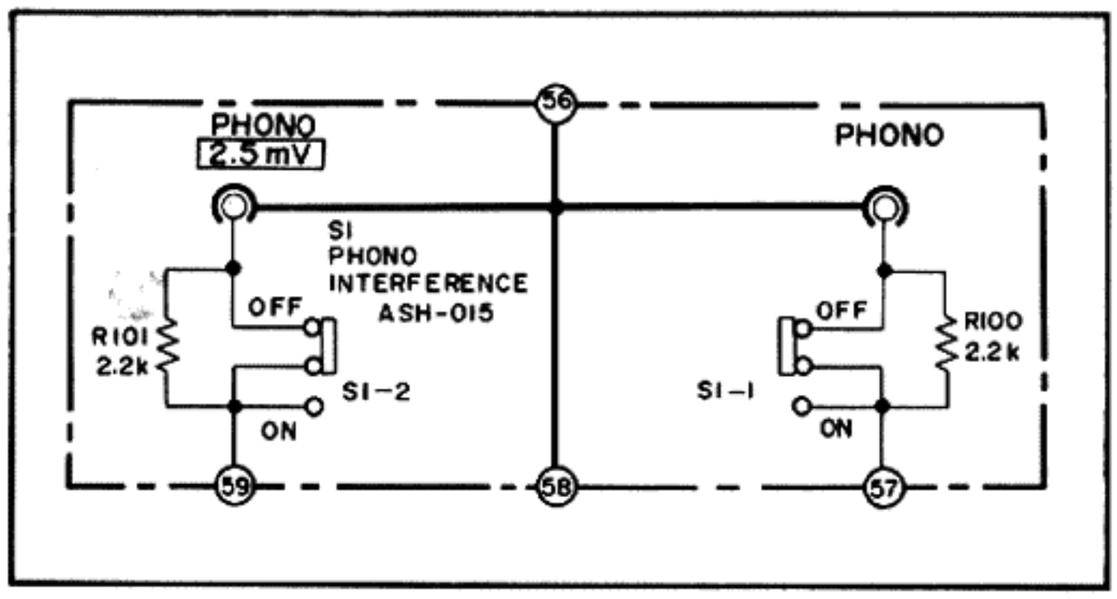

Parts List

Note: When ordering resistors, convert the resistance value into code form, and then rewrite the part no. as before.

RESISTORS

Part No.	Symbol & Description
RD¼PM □□□ J	R100, R101

OTHERS

Part No.	Symbol & Description	
ASH-015	S1	Slide switch (PHONO INTERFERENCE)
AKB-060		Terminal (INPUT)

9.7 VOLUME ASSEMBLY (GWX-258)

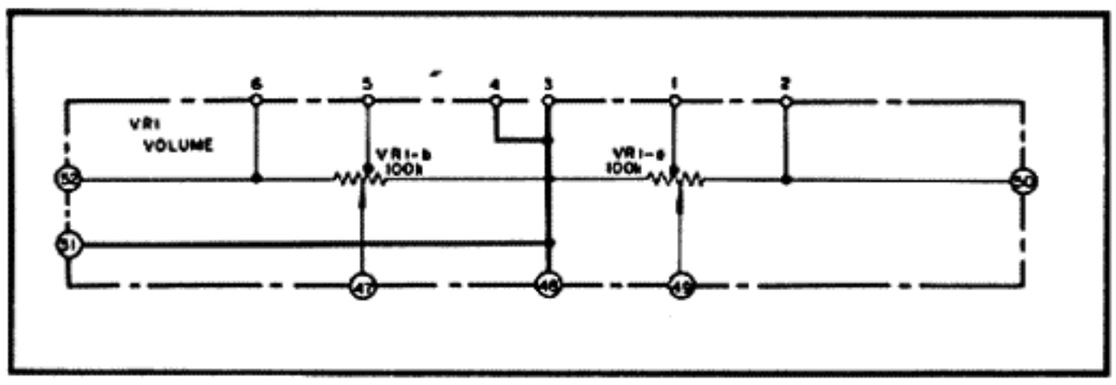

Parts List

Part No.	Symbol & Description	
ACW-113	VR1	Variable resistor (VOLUME)

9.8 SWITCH ASSEMBLY 1 (GWS-169)

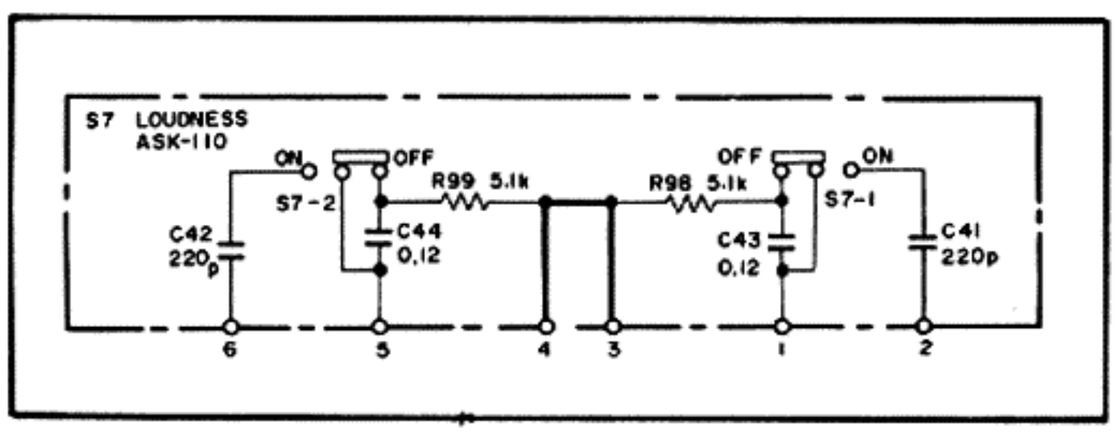

Parts List

CAPACITORS

Part No.	Symbol & Description
CCDSL 221K 50	C41, C42
CQMA 124K 50	C43, C44

Note: When ordering resistors, convert the resistance value into code form, and then rewrite the part no. as before.

RESISTORS

Part No.	Symbol & Description
RD¼PM □□□ J	R98, R99

SWITCH

Part No.	Symbol & Description	
ASK-110	S7	Lever switch (LOUDNESS)

9.9 POWER AMPLIFIER ASSEMBLY (GWH-118)

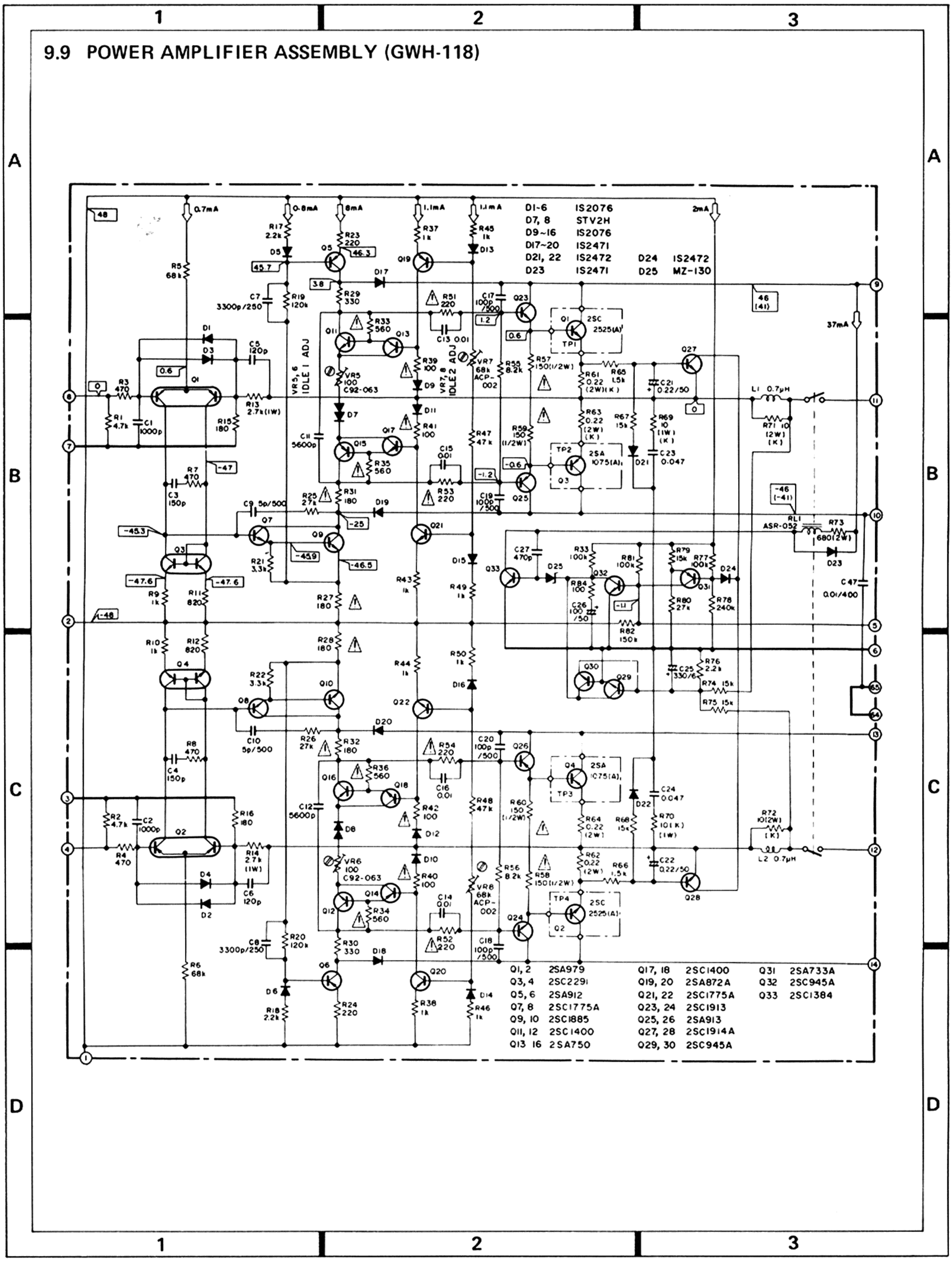

Parts List of Power Amplifier Assembly (GWH-118)

CAPACITORS

Part No.	Symbol & Description
CKDYB 102K 50	C1, C2
CCDSL 151K 50	C3, C4
CCDSL 121K 50	C5, C6
CQMA 332K 250	C7, C8
CCDSL 050D 500	C9, C10
CKDYB 562K 50	C11, C12
CQMA 103K 50	C13–C16
CCDSL 101K 500	C17–C20
CEANL R22M 50	C21, C22
CQMA 473K 50	C23, C24
CQMA 103K 400	C47
CEA 331P 6	C25
CEA 101P 50	C26
CKDYB 471K 50	C27

Note: When ordering resistors, convert the resistance value into code form, and then rewrite the part no. as before.

RESISTORS

Part No.	Symbol & Description		
RD¼PM □□□ J	R1–R12, R15–R26, R29, R30, R37, R38,		
RD¼PM □□□ J	R43–R50, R55, R56		
RD¼PM □□□ J	R65–R68, R74–R84		
RS1P □□□ J	R13, R14		
⚠ RD¼PSF □□□ J	R27, R28, R31–R36, R39–R42, R51–R54		
⚠ RD½PSF □□□ J	R57–R60		
ACN-039	R61–R64	Wire wound	0.22/2W
RN1H □□□ K	R69, R70		
RN2H □□□ K	R71, R72		
RS2P □□□ J	R73		
C92-063	VR5, VR6	Semi-fixed	100
ACP-002	VR7, VR8	Semi-fixed	68k

SEMICONDUCTORS

Part No.	Symbol & Description
2SA979	Q1, Q2
2SC2291	Q3, Q4
2SA912	Q5, Q6
2SC1775A	Q7, Q8, Q21, Q22
2SC1885	Q9, Q10
2SC1400	Q11, Q12, Q17, Q18
2SA750	Q13–Q16
2SA872A	Q19, Q20
2SC1913	Q23, Q24
2SA913	Q25, Q26
2SC1914A	Q27, Q28
2SC945A	Q29, Q30, Q32
2SA733A	Q31
2SC1384	Q33
1S2076 (1S1555) (1S2473)	D1–D6, D9–D16
1S2471	D17–D20, D23
1S2472 (1S1554)	D21, D22, D24
STV2H	D7, D8
MZ-130 (WZ-130)	D25

OTHER

Part No.	Symbol & Description	
ASR-052	RL1	Relay

9.10 PHONE JACK ASSEMBLY (GWX-260)

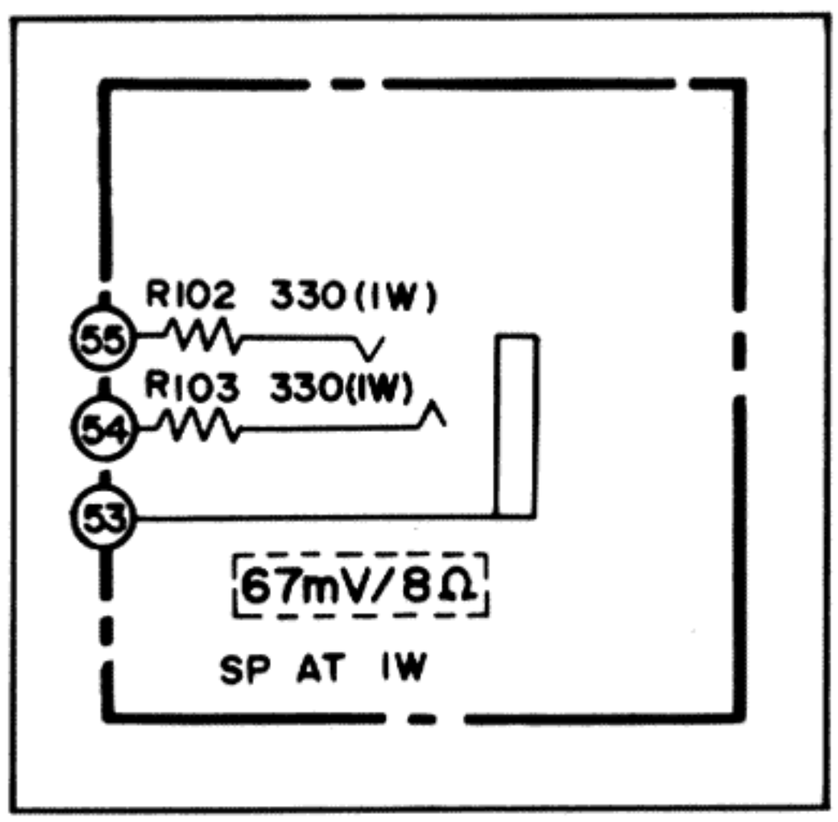

Parts List

Note: When ordering resistors, convert the resistance value into code form, and then rewrite the part no. as before.

RESISTORS

Part No.	Symbol & Description
RS1P □□□ J	R102, R103

OTHER

Part No.	Symbol & Description
AKN-023	Phones jack

9.11 INDICATOR ASSEMBLY (AWV-001)

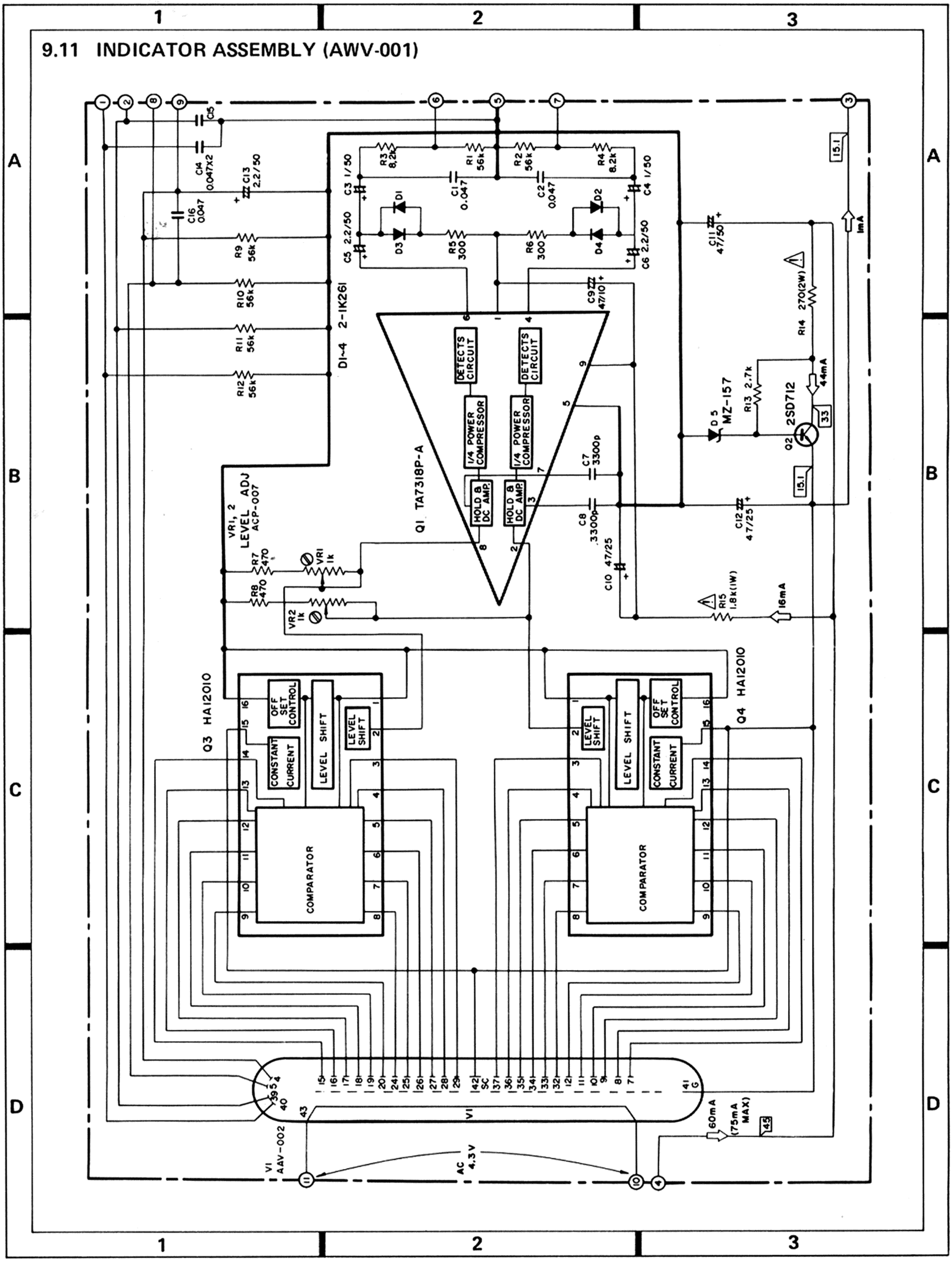

· Parts List of Indicator Assembly (AWV-001)

CAPACITORS

Part No.	Symbol & Description
CQMA 473K 50	C1, C2
CEA 010P 50	C3, C4
CEA 2R2P 50	C5, C6, C13
CQMA 332K 50	C7, C8
CEA 470P 10	C9
CEA 470P 25	C10, C12
CEA 470P 50	C11
CKDYF 473Z 50	C14–C16

Note: When ordering resistors, convert the resistance value into code form, and then rewrite the part no. as before.

RESISTORS

Part No.	Symbol & Description		
ACP-007	VR1, VR2	Semi-fixed	1k-B
⚠ RS2P □□□ J	R14		
⚠ RS1P □□□ J	R15		
RD¼PM □□□ J	R1–R3		

SEMICONDUCTORS

Part No.	Symbol & Description
TA7318P-A	Q1
2SD712	Q2
HA12010	Q3, Q4
2-1K261	D1–D4
MZ-157 (WZ-157)	D5

OTHERS

Part No.	Symbol & Description	
AAV-002	V1	Fluorescent indicator tube
ABA-048		Screw 3x6

9.12 SWITCH ASSEMBLY 2 (GWS-170)

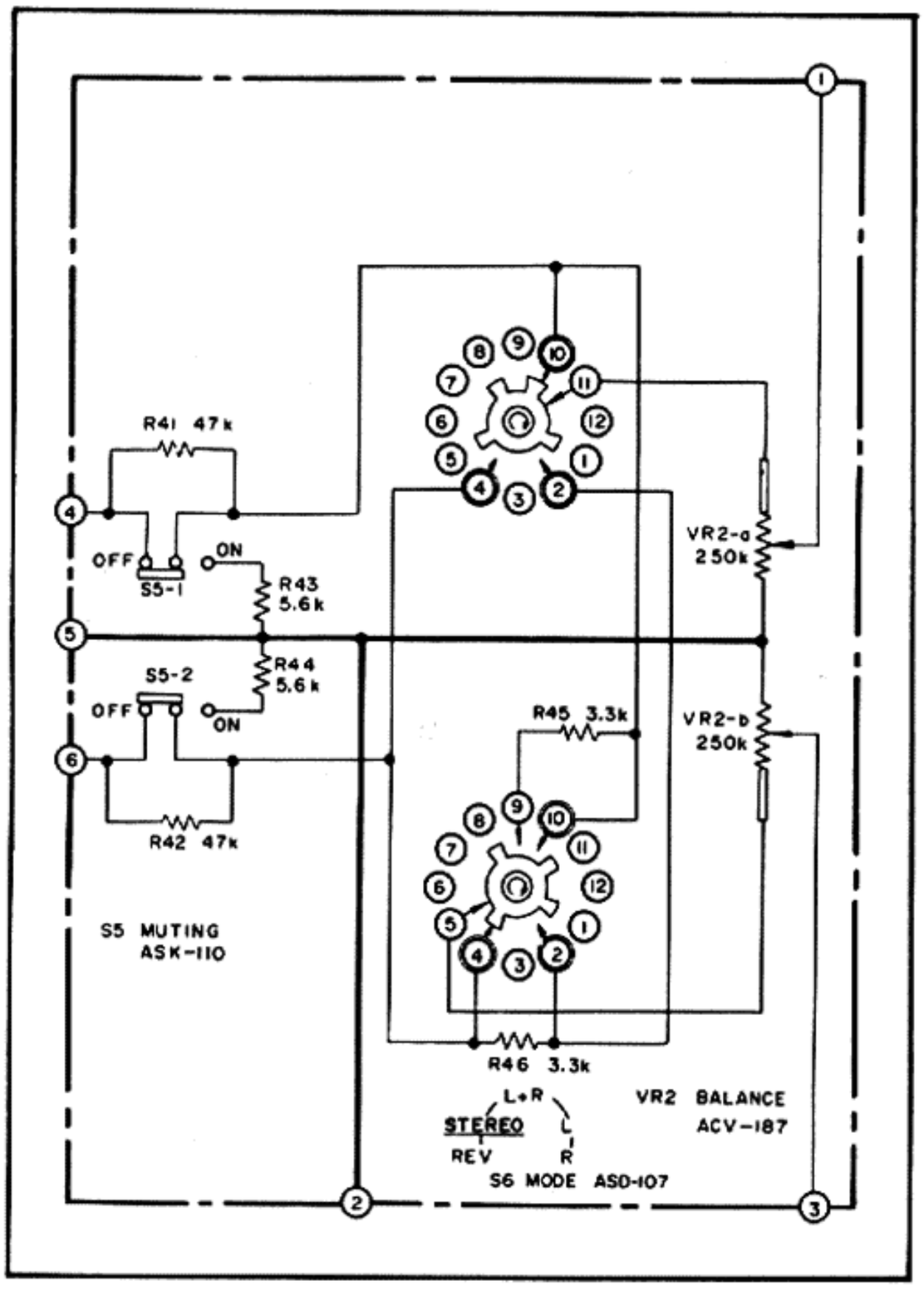

Parts List

Note: When ordering resistors, convert the resistance value into code form, and then rewrite the part no. as before.

RESISTORS

Part No.	Symbol & Description	
RD¼PM □□□ J	R41–R46	
ACV-187	VR2	Variable (BALANCE)

SWITCHES

Part No.	Symbol & Description	
ASK-110	S5	Lever (MUTING)
ASD-107	S6	Rotary (MODE)

9.13 POWER SUPPLY ASSEMBLY (GWR-112)

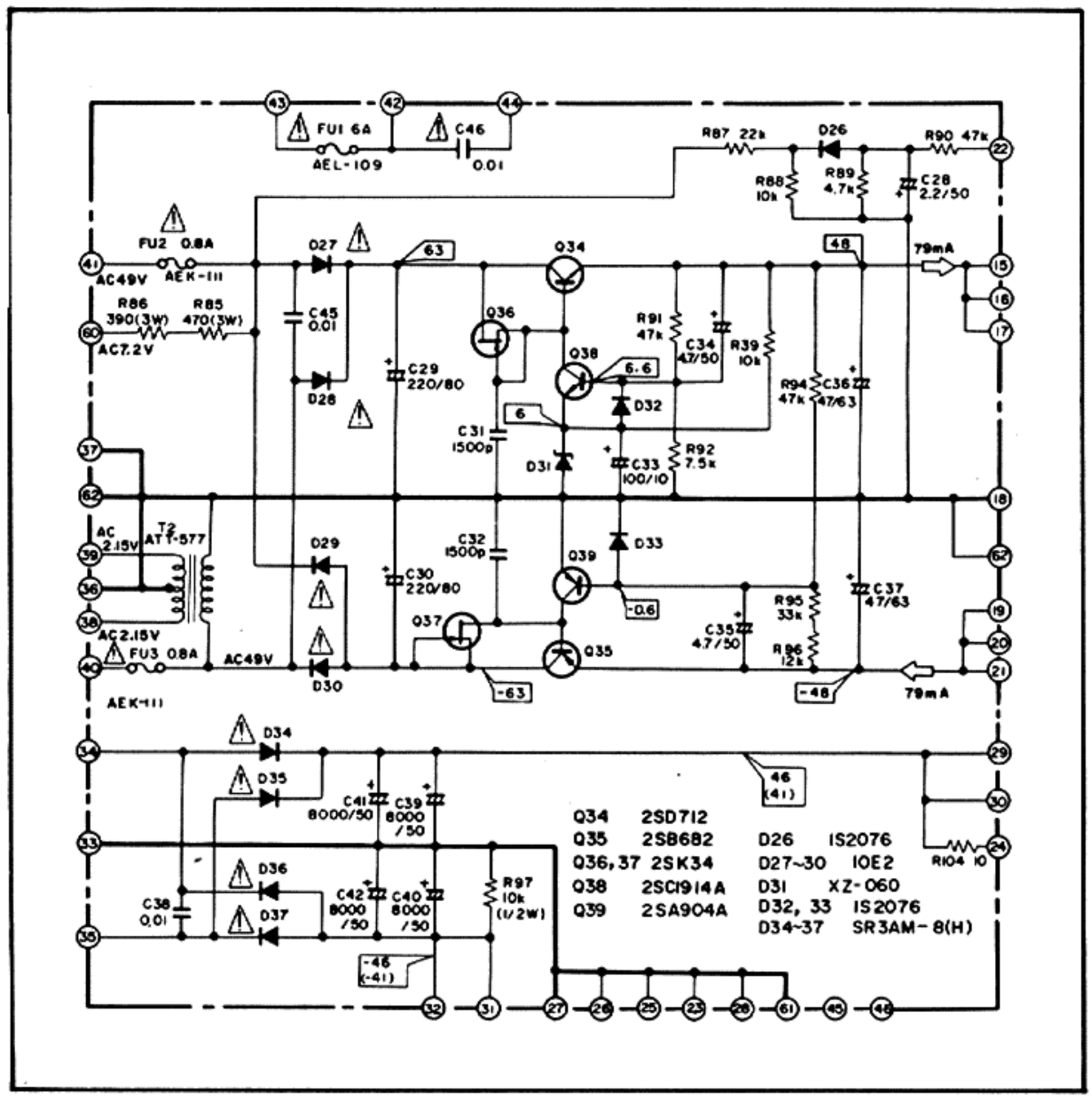

Parts List

CAPACITORS

Part No.	Symbol & Description		
CEA 2R2P 50	C28		
CEA 221P 80	C29, C30		
CKDYB 152K 50	C31, C32		
CEA 101P 10	C33		
CEANL 4R7M 50	C34, C35		
CEA 470P 63	C36, C37		
ACG-004	C38, C45	Ceramic	0.01/150V
ACH-082	C39–C42	Electrolytic	8000/50V
⚠ACG-003	C46	Ceramic	0.01/125V

Note: When ordering resistors, convert the resistance value into code from, and then rewrite the part no. as before.

RESISTORS

Part No.	Symbol & Description
RS3P □□□ J	R85, R86
RD¼PM □□□ J	R87–R96
RD½PS □□□ J	R97
⚠RF¼PS □□□ J	R104

SEMICONDUCTORS

Part No.	Symbol & Description
2SD712	Q34
2SB682	Q35
2SK34	Q36, Q37
2SC1914A	Q38
2SA904A	Q39
1S2076	D26, D32, D33
(1S1555)	
⚠10E2	D27–D30
(SIB01-02)	
XZ-060	D31
⚠SR3AM-8/H/	D34–D37

OTHER

Part No.	Symbol & Description	
⚠ATT-309	T1	Heater transformer
ABA-139		Screw 3x6

10. PACKING

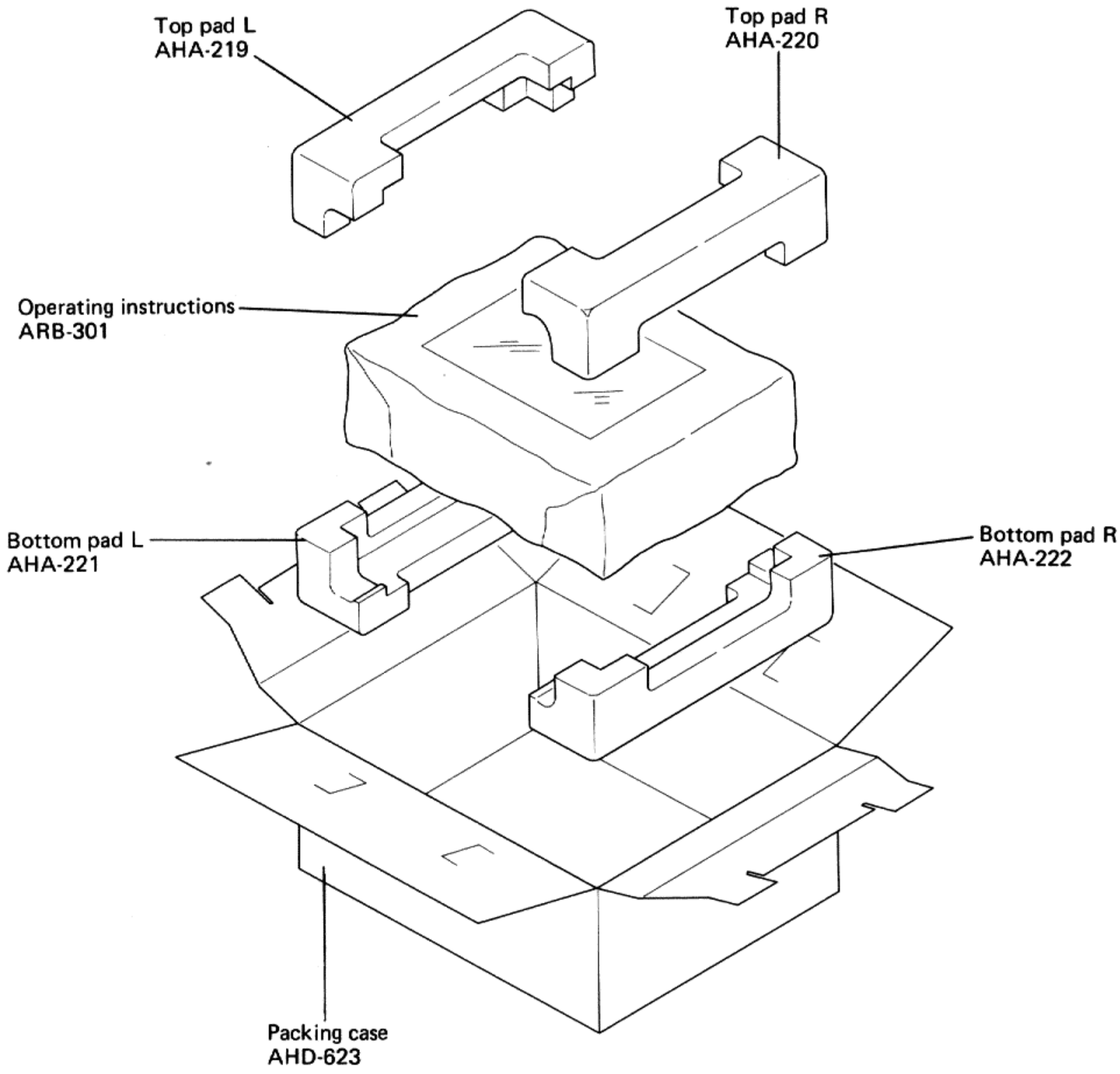
Top pad L
AHA-219
Top pad R
AHA-220
Operating instructions
ARB-301
Bottom pad L
AHA-221
Bottom pad R
AHA-222
Packing case
AHD-623