P-P. C. Board TNPA2108

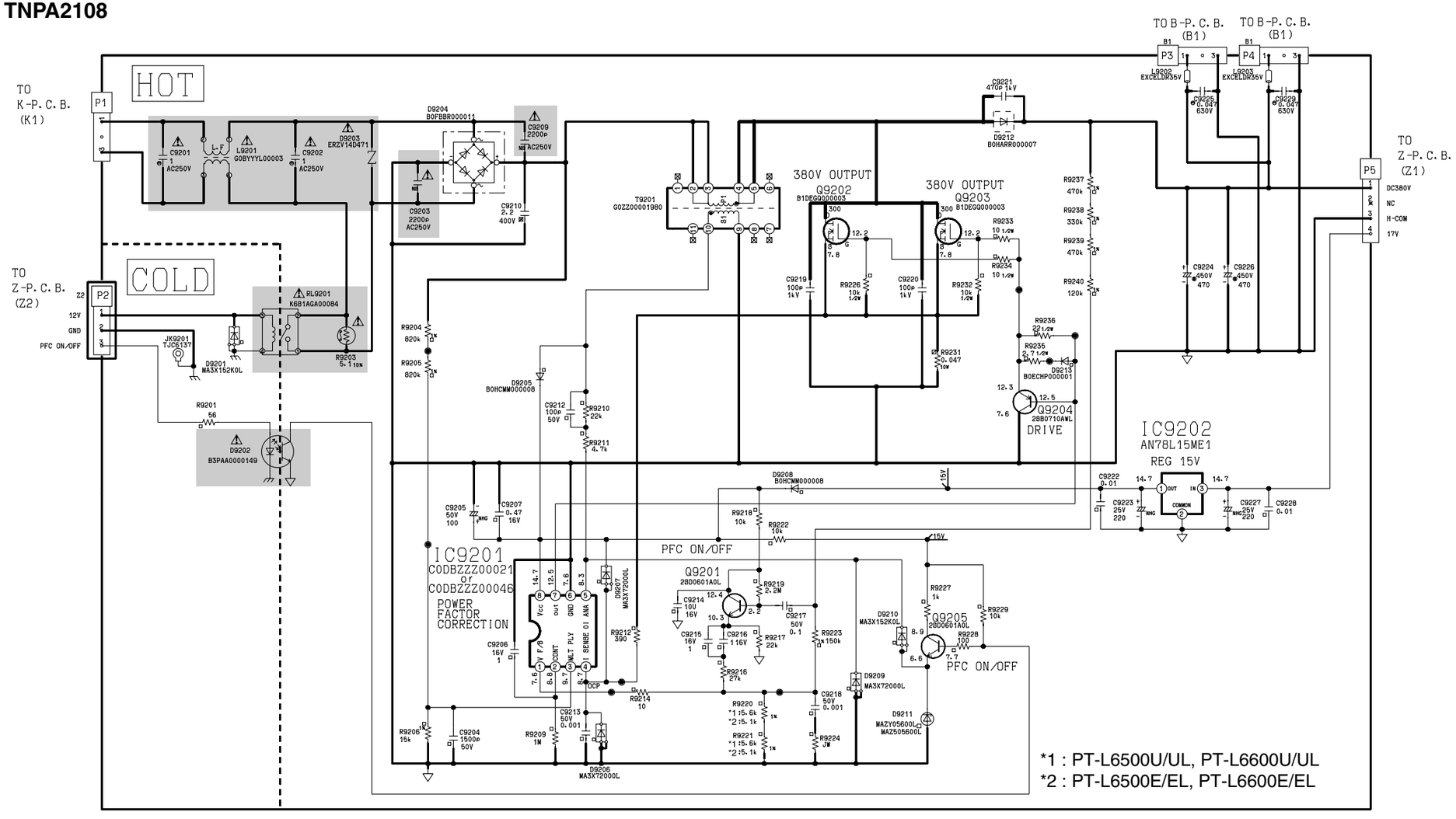
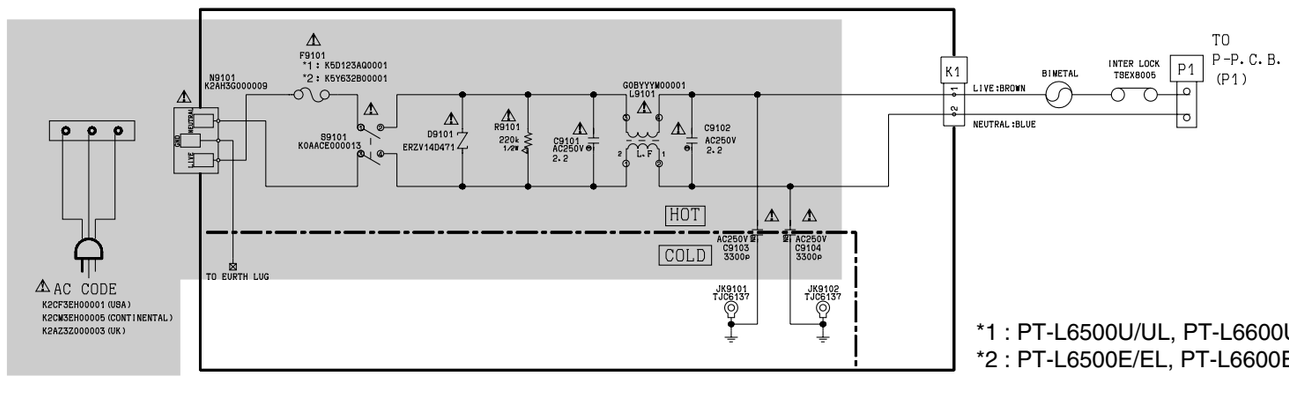
K-P. C. Board TXANP03VJE4