NIKKO POWER AMP

ALPHA 450

STEREO POWER AMPLIFIER

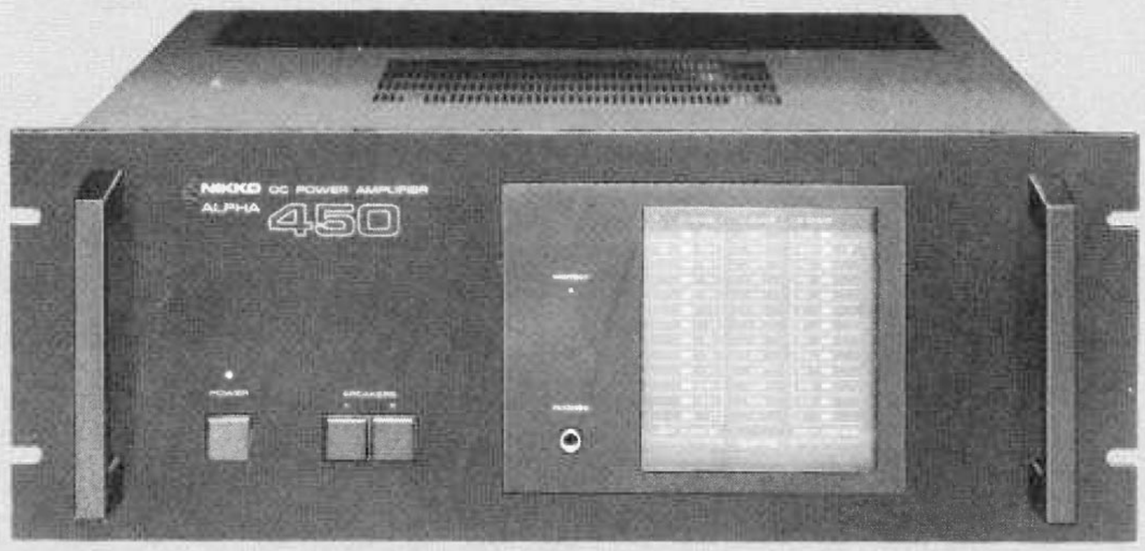

TYPE AND VOLTAGE

W-TYPE :	UL and CSA type	120V AC
E-TYPE :	NK-STD type	220V AC
B-TYPE :	BS type	240V AC

SERVICE MANUAL

CONTENTS

SPECIFICATIONS 1
BLOCK DIAGRAM 2
DISASSEMBLY 3
CIRCUIT DESCRIPTION ..... 4 ~ 6
ALIGNMENT ..... 7 ~ 9
SCHEMATIC DIAGRAM 10, 11
P.C. BOARD ..... 12 ~ 15
PARTS LOCATION 16
POWER TRANSISTORS MOUNTING ASSEMBLY 17
PARTS LIST ..... 18 ~ 20
SAFETY INSTRUCTION 21
SEMICONDUCTOR DATA,
- TRANSISTORS 22
- FIELD EFFECT TRANSISTORS 22
- DIODES, LED'S 22
- ZENER DIODES 22
- INTEGRATED CIRCUITS 23, 24

www.hifiengine.com

SPECIFICATIONS

AMPLIFIER SECTION

Continuous Power Output per Channel:

20 ~ 20000 Hz (8 ohms) . . . . . more than 220 Watts

20 ~ 20000 Hz (4 ohms) . . . . . more than 240 Watts

1000 Hz (8 ohms) . . . . . more than 240 Watts

1000 Hz (4 ohms) . . . . . more than 240 Watts

T. H. Distortion, 8 ohms:

at Continuous Power Output . . no more than 0.008%

at 1 Watt Power Output . . . . . no more than 0.02%

T. H. Distortion, 4 ohms:

at Continuous Power Output . . . no more than 0.02%

I. M. Distortion, 8 ohms:

at Continuous Power Output . . . no more than 0.01%

at 1 Watt Power Output . . . . . no more than 0.02%

IHF Power Bandwidth, 8 ohms: . . . . . 10 ~ 70000Hz

Damping Factor at 1000 Hz, 8 ohms: . . . . more than 80

Frequency Response, "NORMAL" input, 8 ohms:

at 1 Watt Power Output . . 20 ~ 100000Hz +0, −1dB

Input Sensitivity for 300 Watts Power Output:

MAIN IN . . . . . 1V ± 2dB

Signal to Noise Ratio, IHF "A" Network:

MAIN (NORMAL, DIRECT) . . . . better than 115dB

Signal to Noise Ratio, DIN Filter:

MAIN IN (NORMAL, DIRECT) . . better than 90dB

Channel Balance: . . . . . no more than 1dB

Residual Hum and Noise, 8 ohms: . . no more than 0.4 mV

Idling Current: . . . . . 50 ~ 150mA

Midpoint Voltage: . . . . . 0 ± 30mV

Muting Delay Time: . . . . . 2 ~ 7 seconds

GENERAL

Power Requirement:

W-TYPE . . . . . AC 120V, 60Hz

E-TYPE . . . . . AC 220V, 50Hz

B-TYPE . . . . . AC 240V, 50Hz

Power Consumption: . . . . . 800 W (1.25 KVA)

Ambient Temperature during Operation: . . . −10 ~ 30°C

Dimensions:

Width . . . . . 482 mm (19 inches)

Height . . . . . 182 mm (7 1/4 inches)

Depth . . . . . 460 mm (18 1/8 inches)

Weight, without package: . . . . . 21.5 kg (47.3 lbs)

*Specifications are subject to change without notice.

www.hifiengine.com

BLOCK DIAGRAM

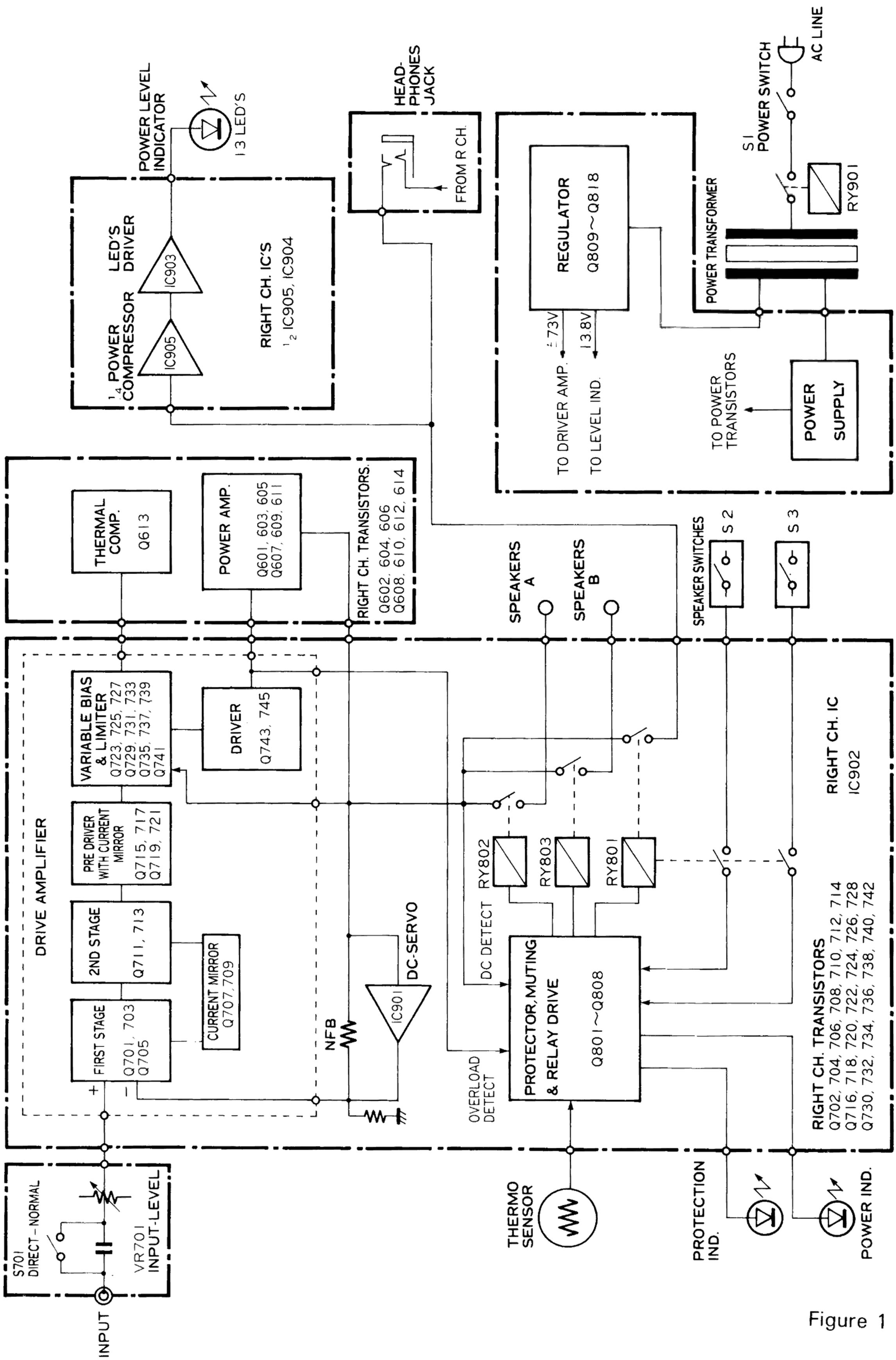

Figure 1

DISASSEMBLY

CABINET COVER REMOVAL

a. Remove six tapping screws from the top of the unit.

b. Remove four screws from both sides of the unit.

c. Lift the cabinet cover away from the unit.

BOTTOM PLATE REMOVAL

a. Remove eleven tapping screws (#1 – #11) from the bottom of the unit as shown in Photo 1.

b. Lift the bottom plate away from the unit.

FRONT PANEL REMOVAL

a. Remove four tapping screws (#1 – #4) from the left side of the unit as shown in Photo 2.

b. Similarly remove four tapping screws from the right side of the unit.

c. Remove the front panel away from the unit by pulling it forward.

POWER TRANSFORMER REMOVAL

a. Remove the cabinet cover and the bottom plate.

b. Disconnect all the cables from the power transformer.

c. Remove four nuts (#1 – #4) from the chassis as shown in Photo 3.

d. Lift the power transformer away from the unit.

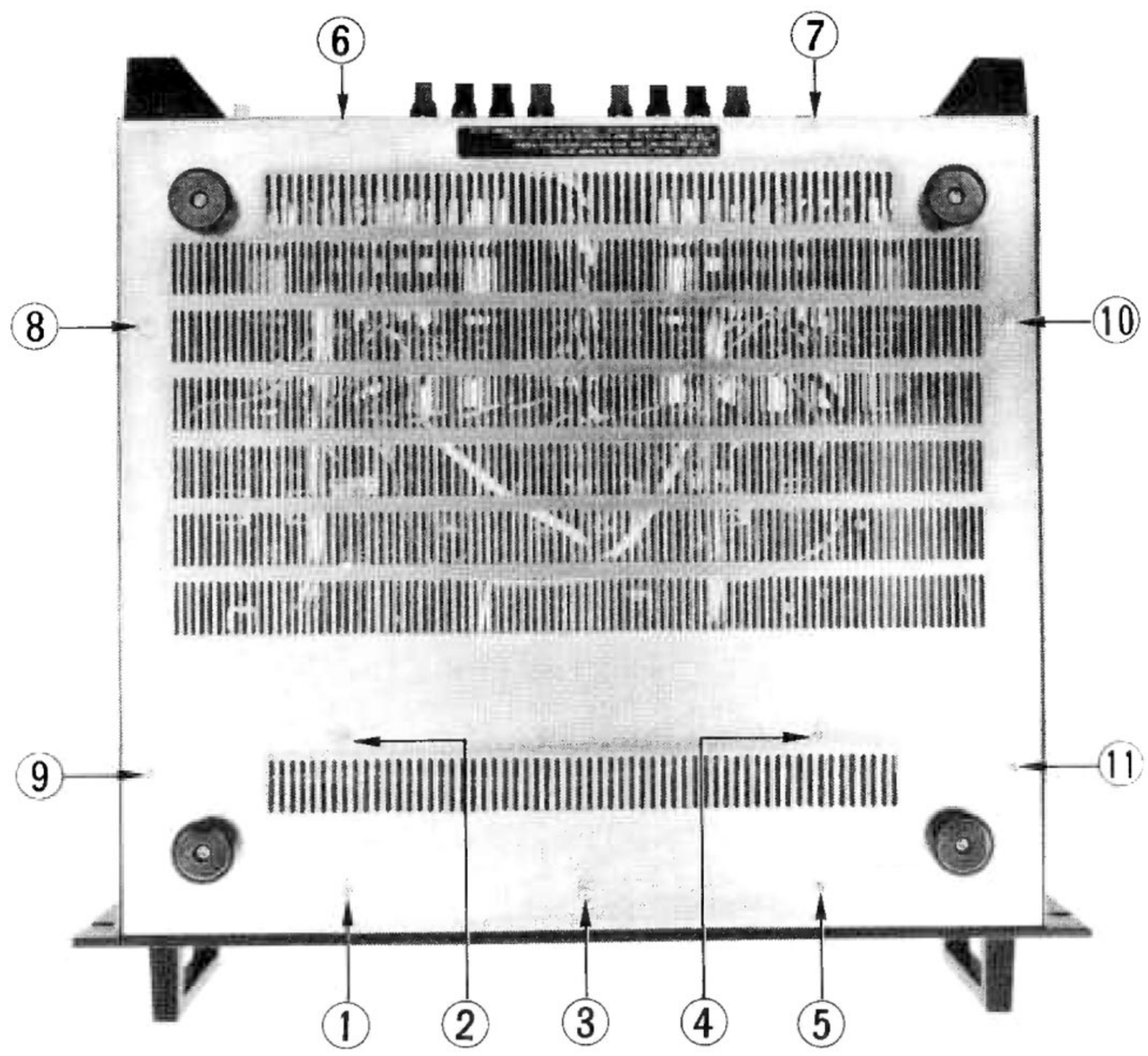

Photo 1

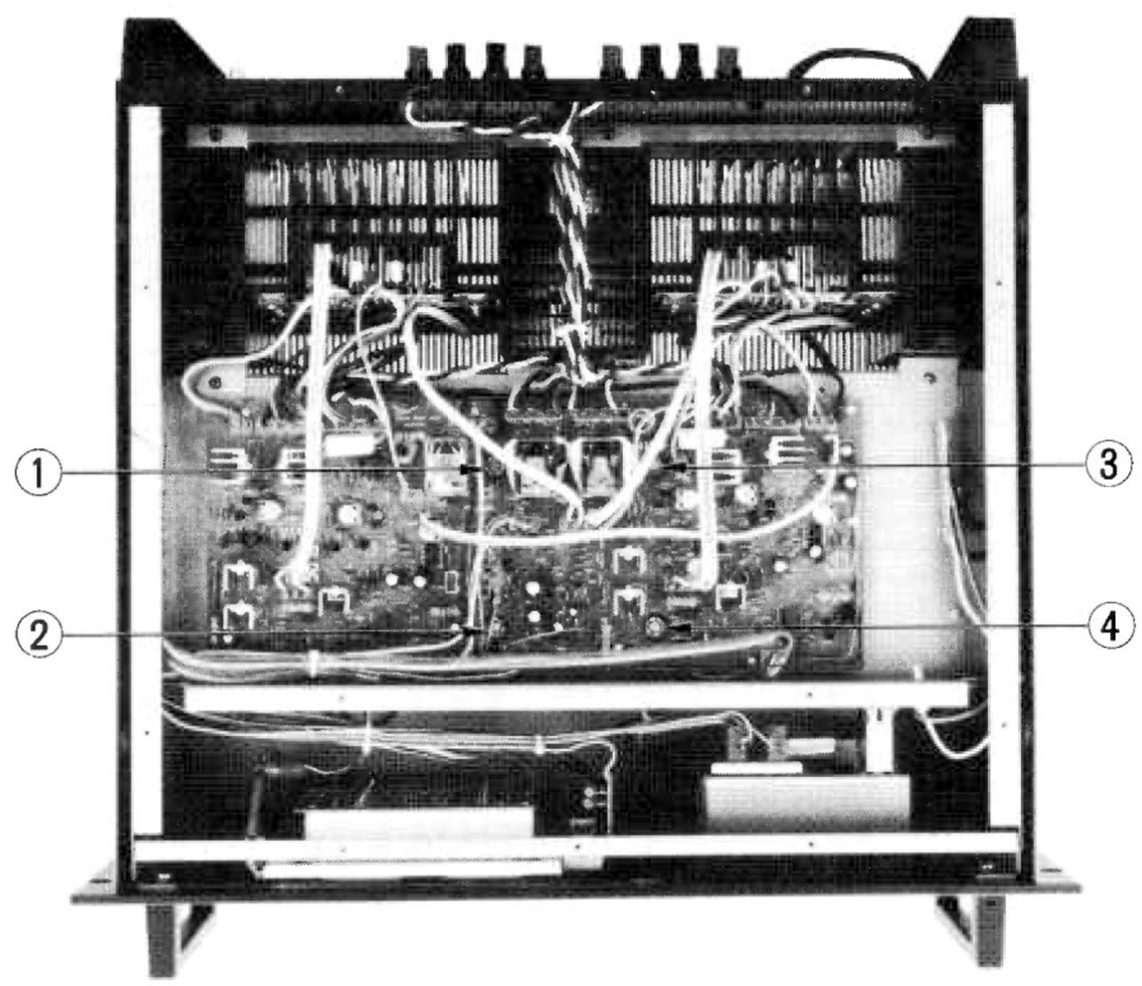

Photo 3

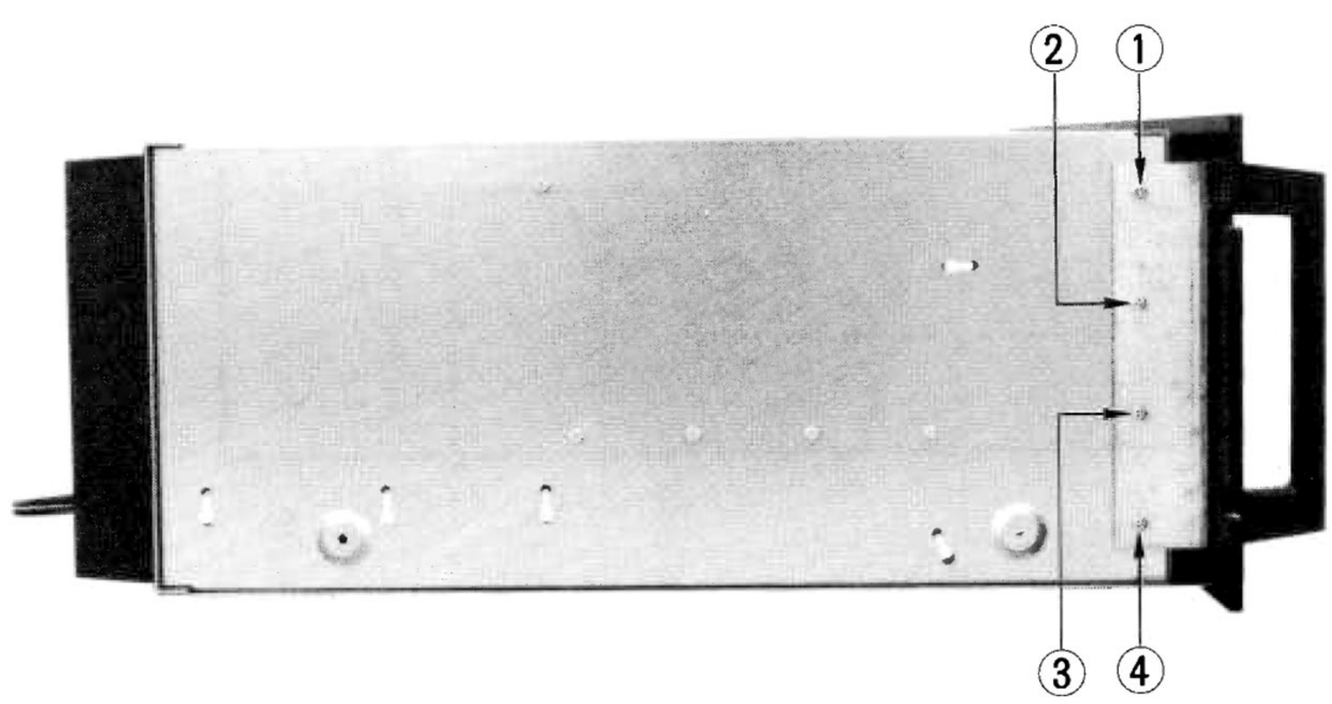

Photo 2

www.hifiengine.com

CIRCUIT DESCRIPTION

NIKKO's **ALPHA 450**, adopting latest devices such as Hi-fT power transistors, is of a design introducing a variable bias circuit (non-switching circuit), a DC servo circuit and other most advanced techniques.

For details, refer to page 2 "BLOCK DIAGRAM" and page 10 "SCHEMATIC DIAGRAM".

The following are explanations of the main circuits and devices.

1. VARIABLE BIAS CIRCUIT

Currently, in the output stage of power amplifiers are mostly used SEPP (Single Ended Push Pull) circuits. (Fig. 2).
It is generally known that the current (idle current) flowing through NPN and PNP transistors of this circuit can be classified into three large groups of operation form, class "A", class "AB" and class "B". (Fig. 3).
In class "A" operation, neither of collector currents, Q_1 and Q_2, becomes zero nor cut off. Even when the current flowing to the load R_L is zero, a certain current is flowing through Q_1 and Q_2, and so no crossover distortion exists theoretically.
To realize perfect class "A" operation, however, a current equal to or more than maximum output should continue to be let flow at the output stage as idle current, causing class "A" operation to prove to be a poor efficiency system.

In class "AB" or "B" operation, the Q_1 plays the role of amplification of the plus part of the signal and Q_2 that of the minus part, no matter whether idle current is large or small.
In other words, there definitely exists a period in which, when one transistor is on, the other transistor keeps cutting off, in these operations.

Switching distortion or crossover distortion is caused at the moment of this active status turning into cut-off status or the cut-off status into the active status. Nevertheless, as these operation forms have high efficiency with small idle current, it is much easier to use class "AB" or "B" operation for high power amplification rather than class "A".

A power amplifier enjoying the merit of each of these systems —— that is, practically no crossover or switching distortion being caused in class "A" operation and easier high power amplification being achieved by class "B" —— has been realized by adopting the variable bias circuit.

The idea of a variable bias circuit is that in no case the output stage is allowed to be cut-off by increasing and decreasing bias voltage in corresponding with the voltage of input signal.

Fig. 4 shows the variable vias circuit adopted in **ALPHA 450.**

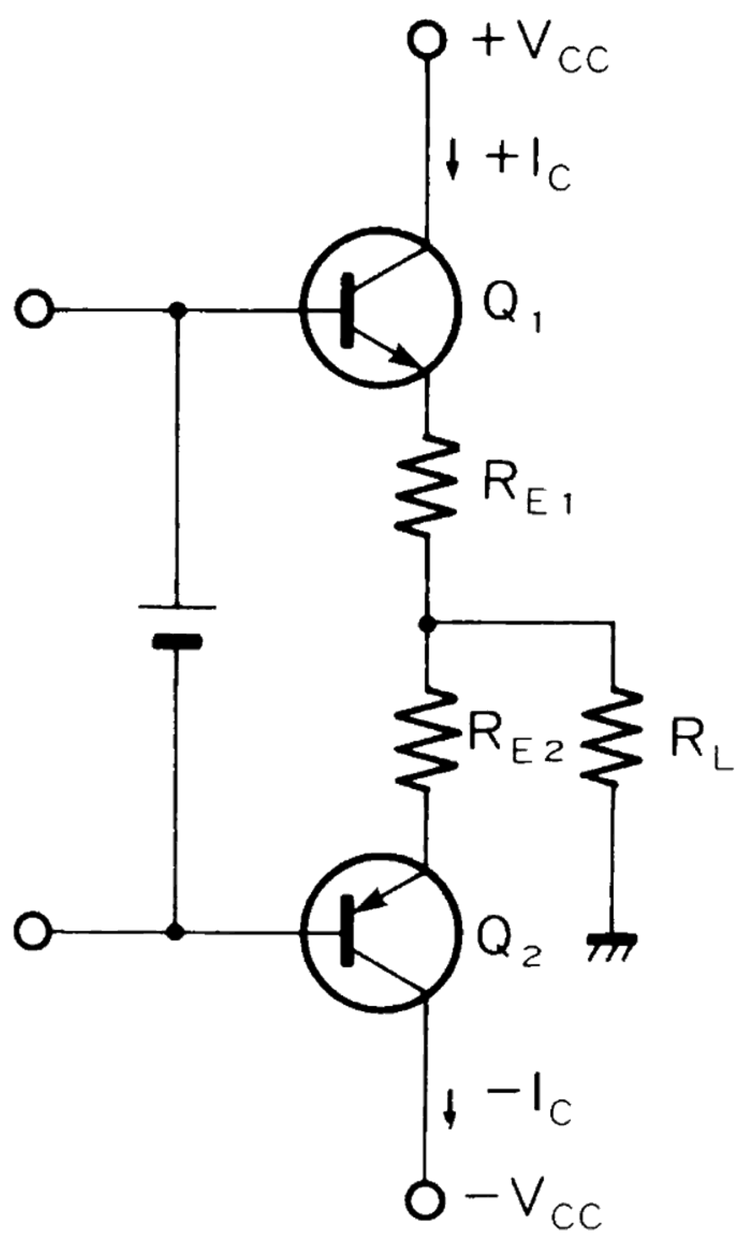

Figure 2 SEEP CIRCUIT

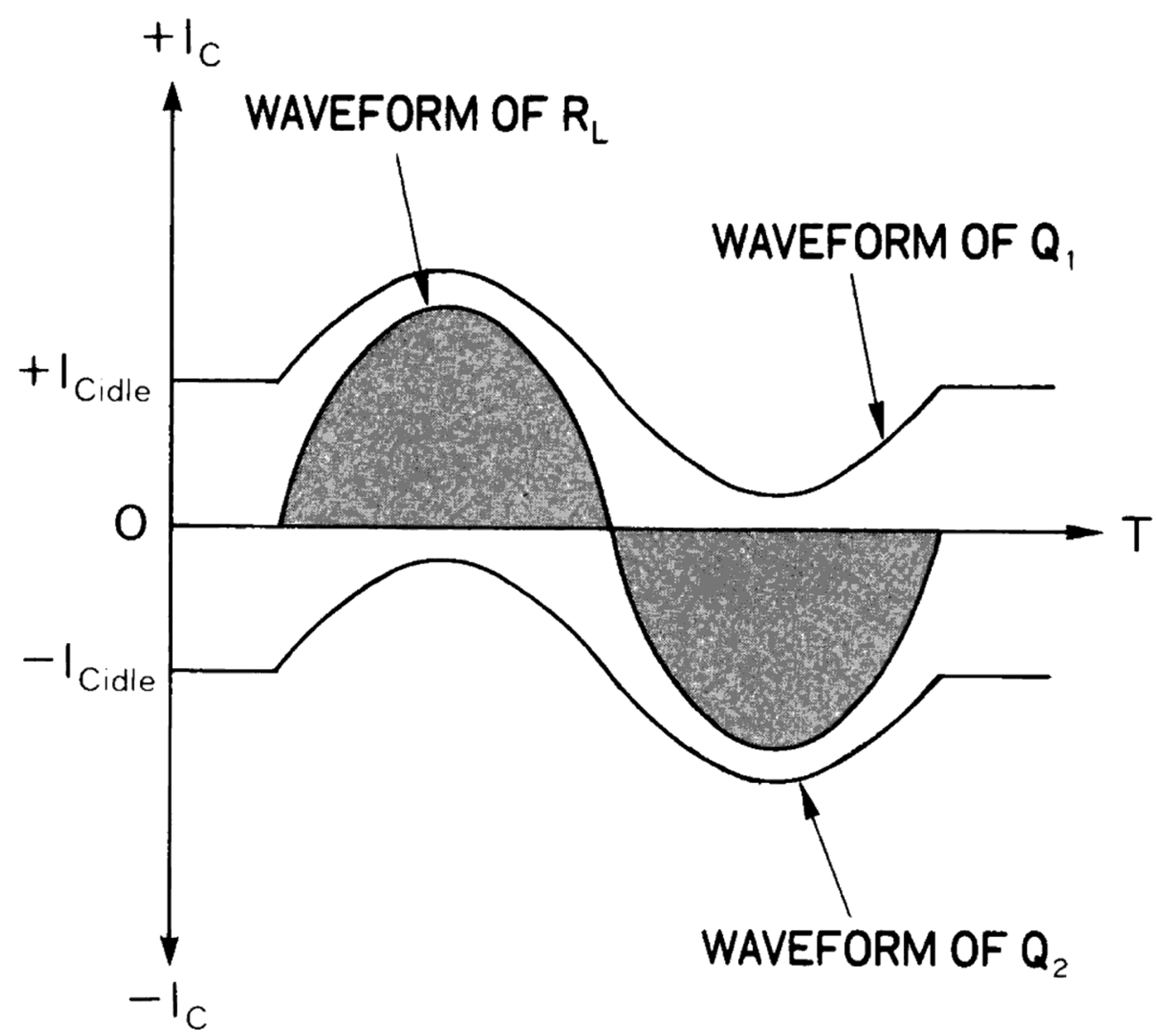

Figure 3-1 CLASS-A OPERATION

www.hifiengine.com

Now, suppose the plus wave (plus part) of signal has been inputted, the currents of Qp_1 and Qd_1 increase and the voltage at both ends of R_{E1} and R_{E3} become high, resulting in a rise in the voltage between Ⓐ point and OUTPUT.
At that time, the voltage at both ends of R_1 and R_3 becomes high because current flows $R_1 \rightarrow Q_1$ and $R_3 \rightarrow Q_3$, causing the potential at Ⓒ point to lower and the voltage of Q_5 between collector and emitter to rise. .
As a result, the voltage between Ⓐ and Ⓑ rises and Qp_2 and Qd_2 is kept from being cut-off.
From another point of view, the voltage drops at the emitter resistors R_{E1} and R_{E3} (these resistors are indispensable to protect transistors in stabilizing bias of the output stage or at the time of abnormal current flowing) are cancelled by the drops at R_1 and R_3, thus protecting Qp_2 and Qd_2 from becoming zero or anti-bias.
In the same manner, when the minus wave (minus part) of signal has been inputted, current flows $Q_2 \rightarrow R_2$ and $Q_4 \rightarrow R_4$, resulting in a rise of V_{CE} at Q_6, thus protecting Qp_1 and Qd_1 from being cut-off.

2. DC SERVO CIRCUIT

DC amplification is the most advanced form adopted for audio amplifiers as there is no phase lag over all the range from DC to audio frequency.
However, in a perfect DC amplifier (which is an amplifier having no coupling capacitors in its input part and NFB loop), a DC drift is caused in case a direct current is inputted or when the DC balance between each element has been lost due to temperature rise inside the amplifier. The DC servo circuit is to suppress such a drift and realize a more stabilized amplifier.

The principle of a DC servo circuit is something like that of a comparator, in which changes in DC current between the output point and the ground is detected and drifts of the amplifier is controlled with their results used as the output of the servo circuit.

The basic elements are an integrating circuit composed of C_1 and R_1, an operational amplifier and a mirror integrator composed of C_2 and R_2. (Fig. 5).
Now, suppose a drift Δeo has been caused at the output of the power amplifier, a potential with the same phase Δef is outputted at the output of the operational amplifier.
On the other hand, the initial stage of the power amplifier is a differential amplifier. When Δef is inputted at its inverting input, the potential at the non-inverting input Δei changes in the opposite direction of Δef, resulting in a decrease of drift at the output of the power amplifier.
The DC servo circuit has a specific frequency characteristic. In the range of DC and ultra low frequency, gain of the power amplifier is kept at one over several tens of decibel, and in the audio frequency band, amplification at a certain gain can be made in the same manner as ordinary power amplifier.
The frequency on which the DC servo circuit starts to have effects is determined by the four elements, C_1, R_1, C_2 and R_2.

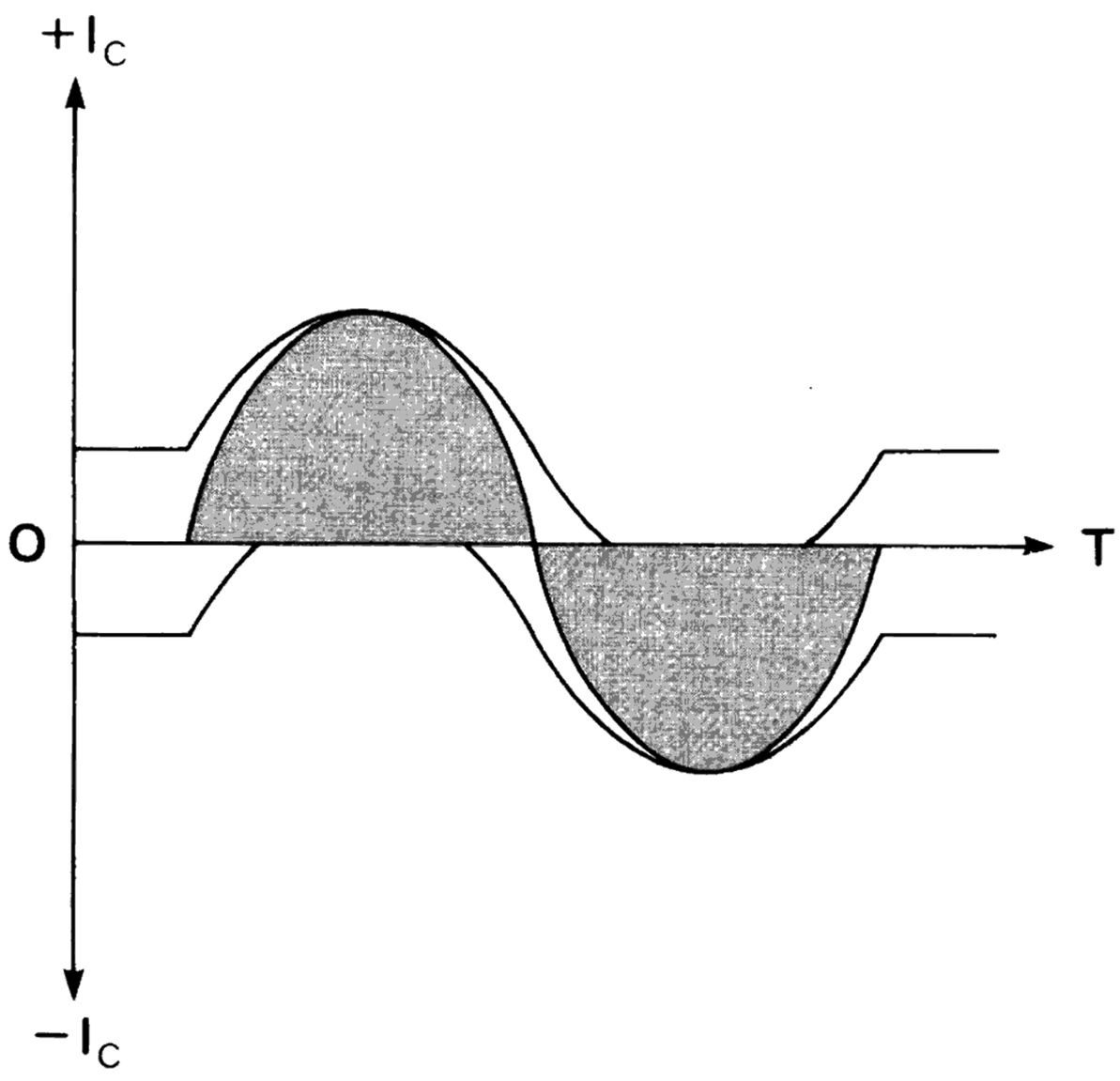

Figure 3-2 CLASS-AB OPERATION

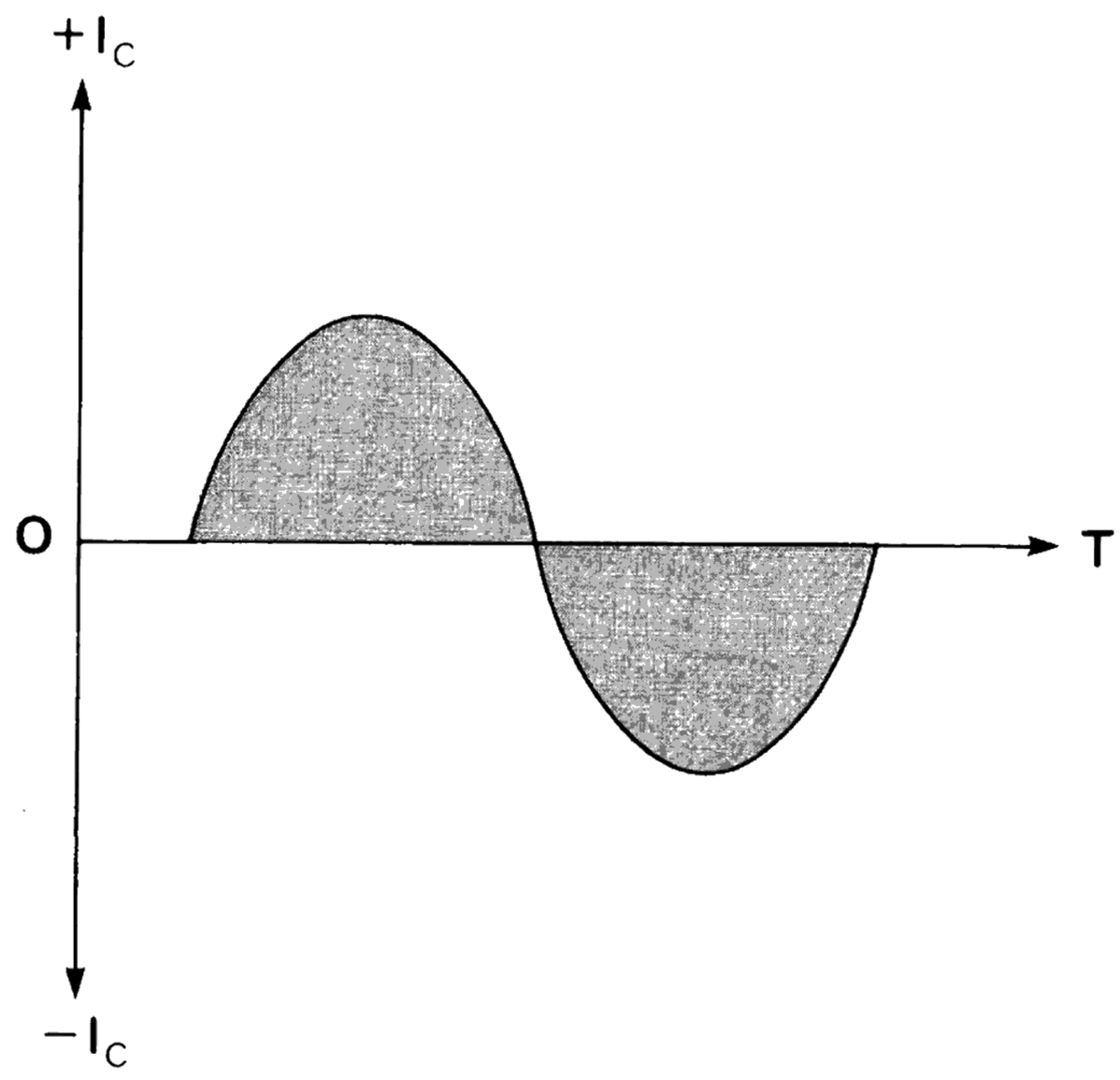

Figure 3-3 CLASS-B OPERATION

www.hifiengine.com

3. Hi-fT POWER TRANSISTORS

For detailes characteristics, refer to "SEMICONDUCTOR DATA" at the end of this manual.

The power transistors employed in ALPHA 450 realize an fT (Current Gain-bandwidth Product) of 80 MHz with NPN type and 60 MHz with PNP type (each being a typical value) in spite of its high Pc (Collector Power Dissipation) such as 150 W (The value when Tc = 25°C). Compared with conventional transistors with a Pc of 150 W where fT was around 10 MHz at maximum, the high speed attained by these Hi-fT power transistors is remarkable.
Such high fT has been realized specially by the inside construction of these transistors which is greatly different from that of conventional ones —— the multi-emitter construction.

In this construction, the emitter inside the transistor is divided into many units and emitter resistors with small resistance are inserted to each unit, resulting in a parallel connection.

This equivalently means that many small signal transistors with high fT and switching speed are parallelly connected, which has made it possible to realize such a high power characteristic while maintaining high switching speed.

Thanks to such construction as mentioned above, these power transistors are excellent in linearity of its *hfe*.
Furthermore, as dissipation is dispersed equally to each emitter due to the emitter-divided construction, they have another feature of being strong against breakdown as compared with conventional power transistors.

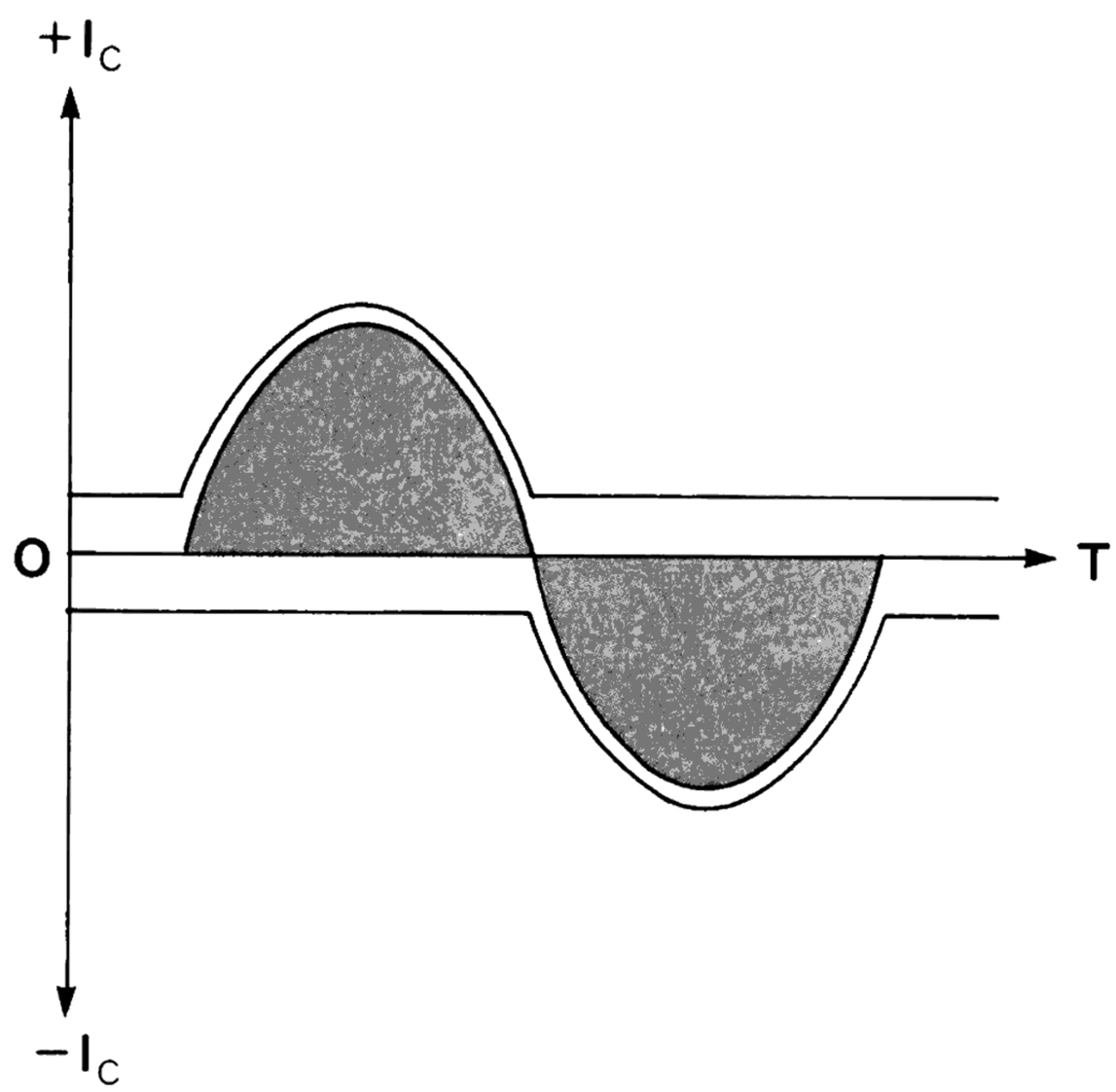

Figure 3-4 OPERATION OF BARIAVLE BIAS

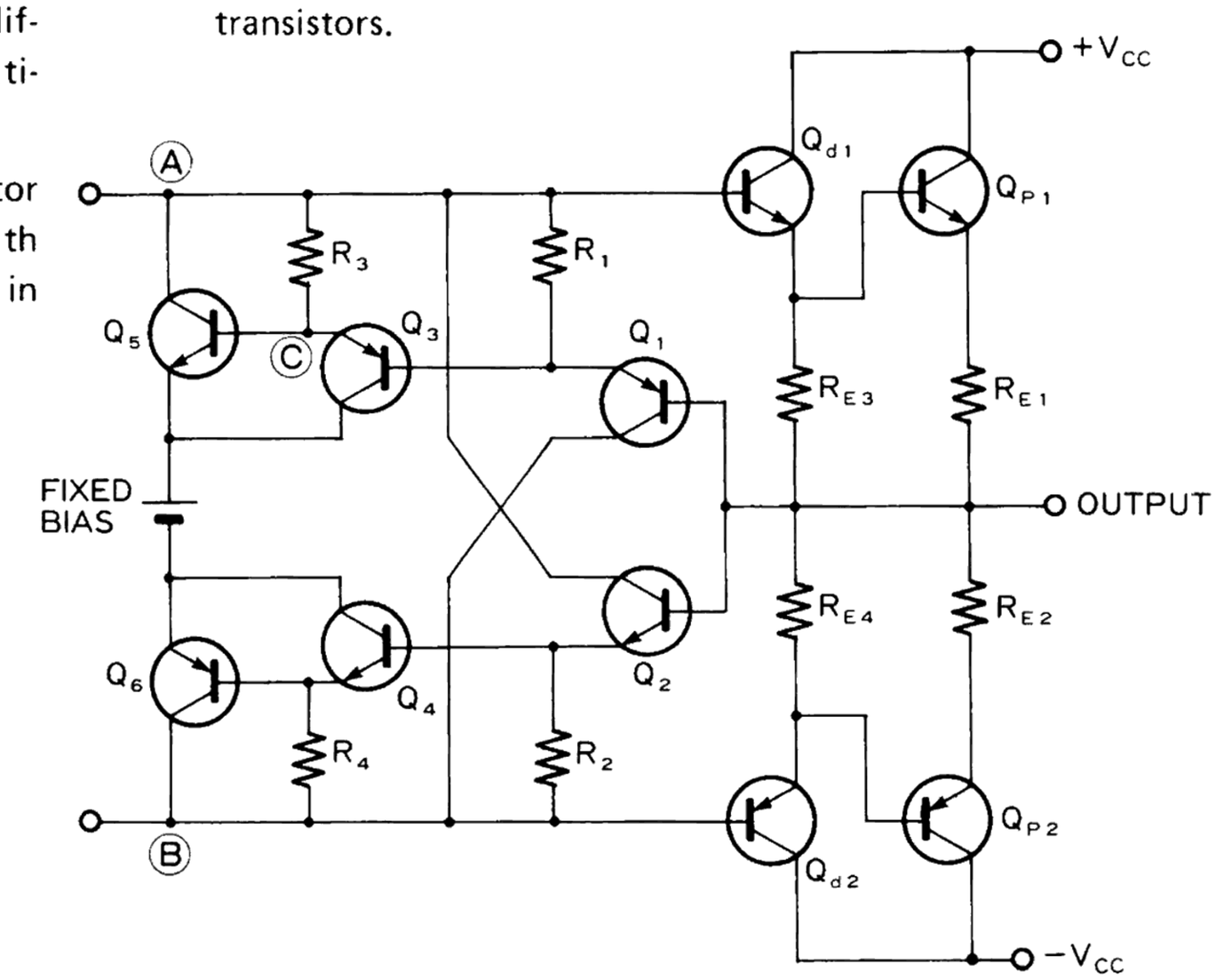

Figure 4 VARIABLE-BIAS CIRCUIT

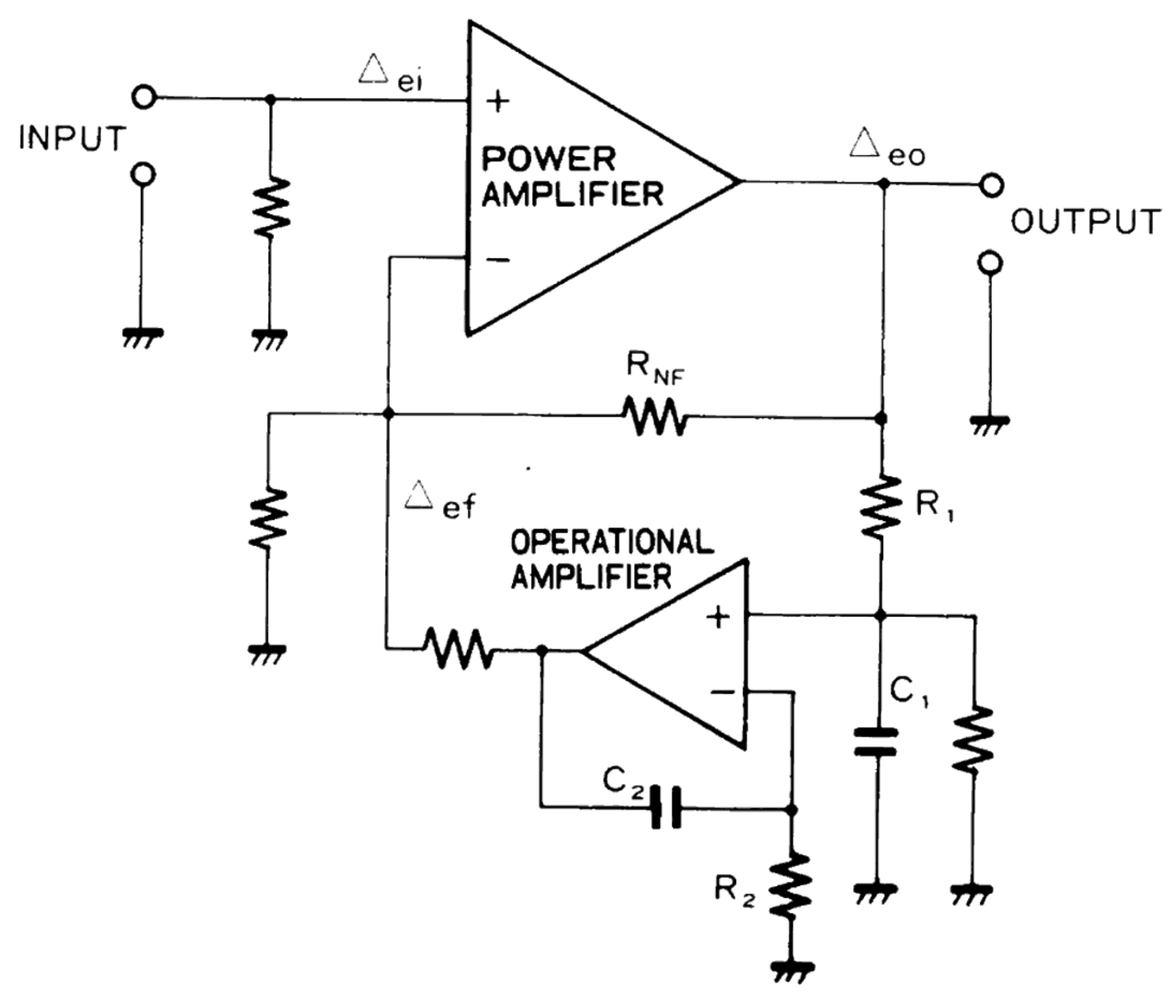

Figure 5 DC-SERVO CIRCUIT

www.hifiengine.com

ALIGNMENT

ALIGNMENT PRECAUTIONS

1. As the ALPHA 450 is a power amplifier with large output power, it consumes much electrical power and a great amount of current flows in the power source line of the primary side. Therefore, in the case when it is connected to the source by an extension cord, the size of the extension cord should be equal or larger than that of the power source cord of the ALPHA 450. Otherwise, the voltage might be reduced or the extension cord might generate excessive heat because of the resistance which the cord has, then not only can proper alignment be done, but also it is very dangerous.

2. If the power sources are supplied to the ALPHA 450 and the instruments by branching off from one cord, the voltage is sometimes dropped down and the stability of the instruments goes down.
   The ALPHA 450 and the instruments should be connected to the power sources by using independent cords. The ALPHA 450 must take the power source from AC outlet of the wall side.

3. As there are many parts which hold high voltages in the circuit and the parts inside of the ALPHA 450, be careful not to receive an electric shock. In the case of connecting and taking off the instruments, you must turn off the power switch of the ALPHA 450 before getting on the work.

4. When the circuit happens to be shorted by the drivers or test probes used for alignment through mistake, the circuit and the parts will be damaged. As the damage is larger than that of ordinary amplifiers and receivers, close attention is needed. It is advised that the screw driver, excluding the top part, should be wrapped with insulation tape or a driver made of plastic or some kind of insulating material should be used.

5. As the dummy load resistor generates heat while alignment, it gets very hot and you may be burnt if you touch it with bare hands. It is better if you can put the dummy load resistor in a place away from being touched, but the wire between the dummy load resistor and the amplifier should not be long. Contrive some method, like putting the dummy load resistor in a well ventilated box. Further, as more than 10 A current might flow in the wire connecting the dummy load resistor and the amplifier, at least larger than AWG #18 thick wire should be used.

6. The slide switch near the "INPUT LEVEL" volume on the rear panel of the amplifier is to be set in the "NORMAL" position. All the adjustments in the following should be done after the slide switch is set in the "NORMAL" position.

TEST EQUIPMENT

Allow a minimum of 10 minutes warm-up for test equipment.

Maintain rated line voltage.

Audio Frequency Generator
Distortion Meter
Oscilloscope
AC Voltmeter
DC Voltmeter
2-Dummy Load Resistors, 8 ohms, 500 W
2-Dummy Load Resistors, 4 ohms, 500 W

All the semi fixed resistors of the MAIN AMP PCB are set around the center position temporarily. (HVR701 ~ 706, HVR901 and HVR902)

DC BALANCE ADJUSTMENT

1. Connect 8 ohms dummy load resistors to the left and right channel speaker terminals.
2. Turn the "INPUT LEVEL" volume controls down to the fully counter clockwise, and set it to "MIN".
3. Turning on the power switch of the ALPHA 450.
4. Adjust the semi-fixed resistor R901 (left channel) or R902 (right channel) for a 0 ± 5 mV DC voltmeter reading.
5. Turning on the power switch, till the DC balance settled down. This takes about 10 minites. So after adjustment, keep the power switch for 10 minites, then make sure the DC balance again.
6. Turning off the power switch. Remove the DC voltmeter and 8 ohms dummy load resistors.

LIMITER CIRCUIT ADJUSTMENT

NOTE: See illustration, Figure 6, for test equipment hook-up.

1. Connect **4 ohms** dummy load resistors to the left and right channel speaker terminals.
2. Connect the AC voltmeter, distortion meter and the oscilloscope to the left (right) channel speaker terminals. Connect the generator to left (right) channel input terminal.
3. Turning on the power switch of the ALPHA 450.
4. Turn the "INPUT LEVEL" volume control fully clockwise, and set it to "MAX".
5. Set the frequency of the generator to 1KHz. Adjust the output level of the generator so as to make the output power 260 W. (32.5 V AC voltmeter reading.)
6. Adjust the semi-fixed resistors HVR703 ~ HVR706 so that the upper and the lower side peakes of the output waveform begin to clip. (HVR703 and 705

www.hifiengine.com

are for the left channel, HVR704 and 706 for the right.)

7. Turning off the power switch. Remove 4 ohms dummy load resistors.

IDLING CURRENT ADJUSTMENT

1. Connect the 8 ohms dummy load resistors to the left and right channel speaker terminals.
   Connect the DC voltmeter across the wireing terminals No. 16 and 17 (left channel) or No. 35 and 36 (right channel on the MAIN AMP PCB.
2. Turning on the power switch of the ALPHA 450. Adjust the semi fixed resistor HVR701 (left channel) or HVR702 (right channel) so that the DC voltmeter indicates 18 mV ± 1 mV.
3. Turn off the power switch of the ALPHA 450 and remove the DC voltmeter and 8 ohms dummy load registors.

POWER LEVEL INDICATOR ADJUSTMENT

NOTE: See illustration, Figure 6, for test equipment hook-up.

1. Connect **8 ohms** dummy load resistors to the left and right channel speaker terminals.
2. Connect the AC voltmeter, distortion meter and the oscilloscope to the left (right) channel speaker terminals. Connect the generator to left (right) channel input terminal.
3. Turning on the power switch of the ALPHA 450.
4. Turn the "INPUT LEVEL" volume control fully clockwise, and set it to "MAX".
5. Set the frequency of the generator to 1 KHz. Adjust the output level of the generator so as to make the output power 170 W. (37 V AC voltmeter reading.)
6. Adjust the semi-fixed resistors HVR921 (left channel) and HVR922 (right channel) of the LEVEL INDICATOR PCB so that the LED of "200 W" dimly lights up.
7. Turning off the power switch of the ALPHA 450.
8. Remove all test equipment.

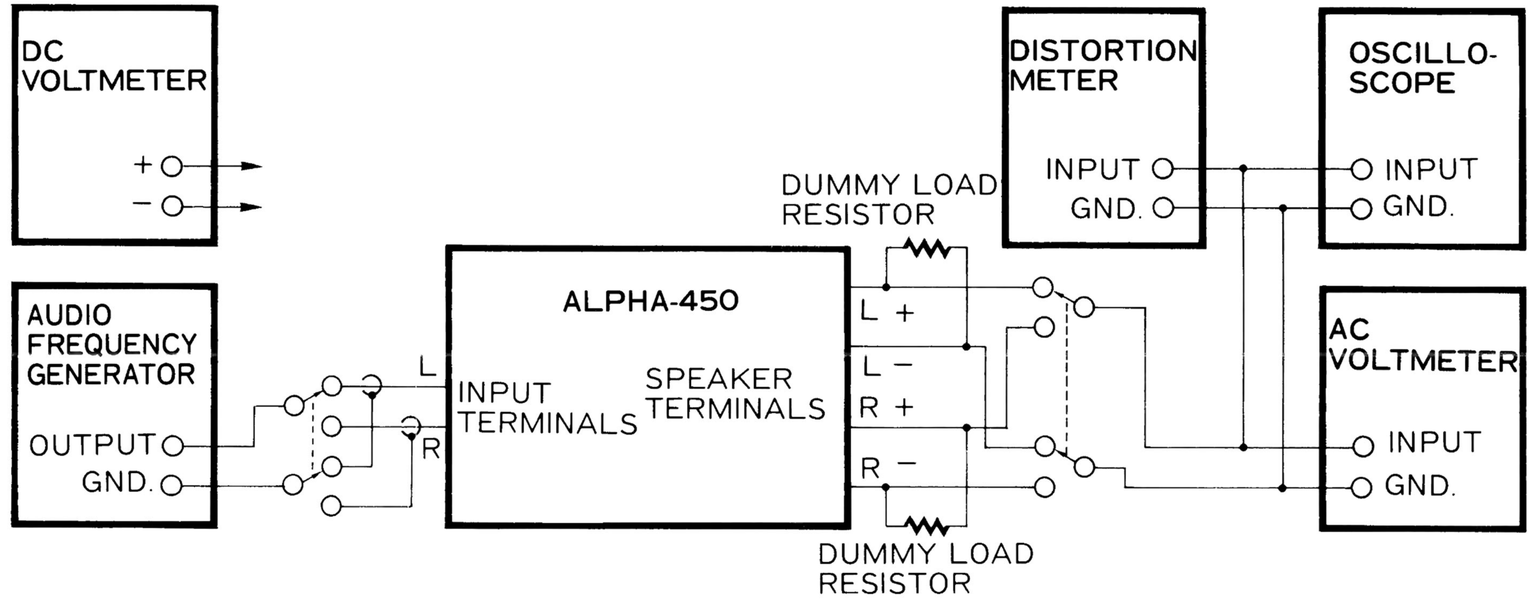

Figure 6 TEST EQUIPMENT HOOK-UP

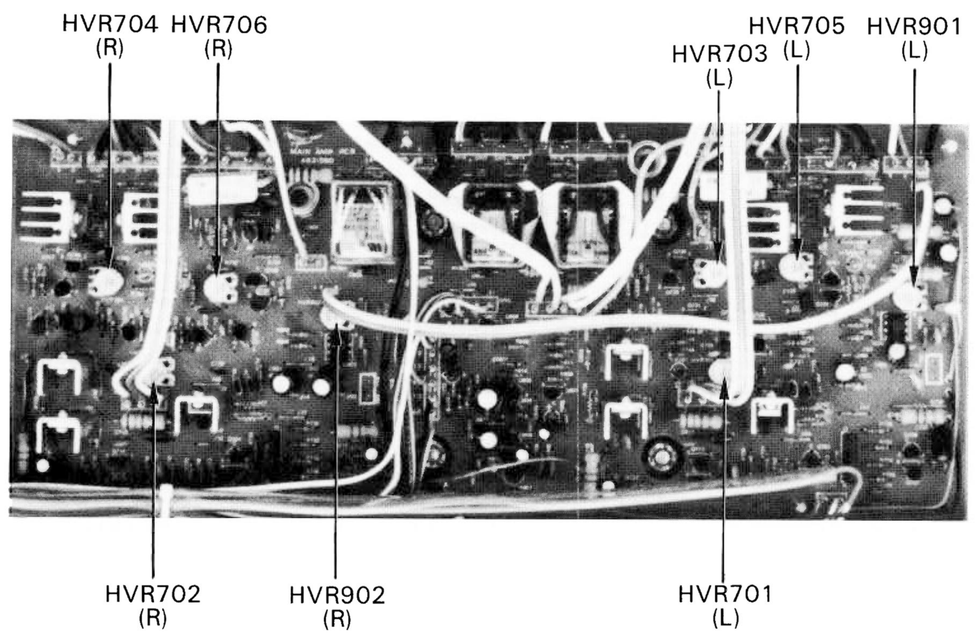

Photo 4 ADJUSTMENT POINTS

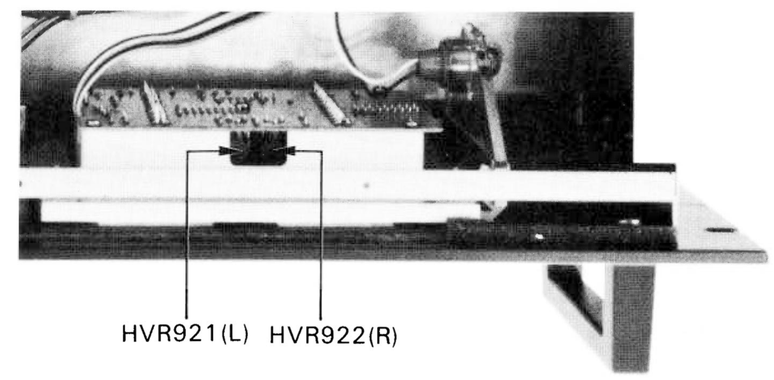

Photo 5 ADJUSTMENT POINTS

SCHEMATIC DIAGRAM

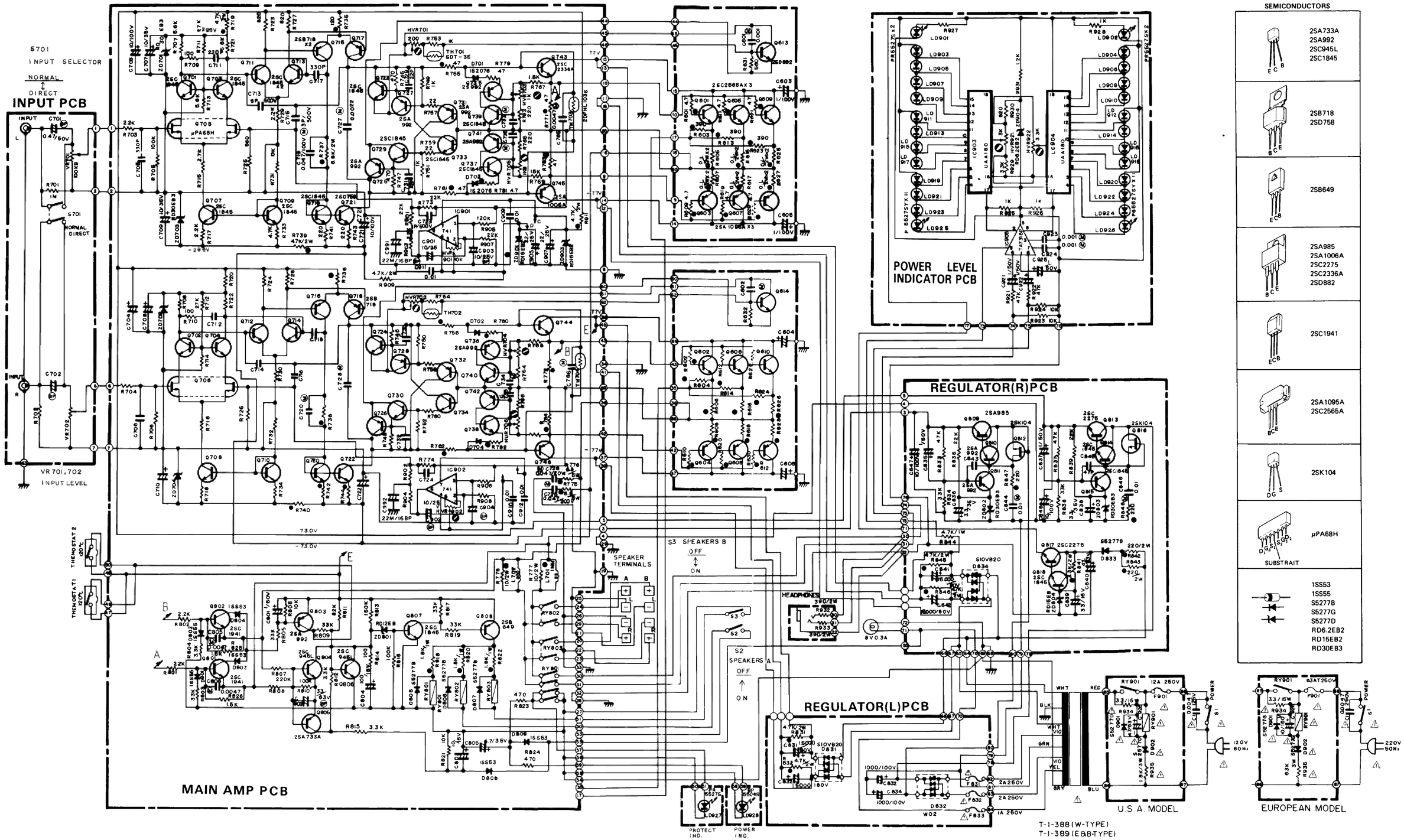

Figure 7

NOTES:

1. SCHEMATIC IS SUBJECT TO CHANGE WITHOUT NOTICE.

UNLESS OTHERWISE SPECIFIED:

2 RESISTANCE VARUES ARE IN OHMS. K = 1,000 ; M = 1,000,000

3. CAPACITANCE VALUES 1.0 AND ABOVE ARE IN pF OR μF (P = pF, M = μF), LESS THAN 1.0 ARE IN μF. (ELECTROLYTIC CAPACITANCE VALUES ARE IN μF/WV.)

4. VOLTAGES ARE MEASURED TO CHASSIS GROUND WITH A "DC VOLTMETER".

SCHEMATIC SYMBOLS:

Ⓜ POLYESTER FILM CAPACITOR
Ⓑ BIPOLAR CAPACITOR
● NONFLAMMABLE RESISTOR

SERVICE INFORMATION:

CAUTION: REFER SERVICING TO QUALIFIED SERVICE PERSONNEL.

1. EACH PRECAUTION TO BE FOLLOWED DURING SERVICING.

2. ⚠ INDICATES SAFETY CRITICAL COMPONENTS FOR CONTINUED SAFETY. REPLACE SAFETY CRITICAL COMPONENTS ONLY WITH MANUFACTURER'S RECOMMENDED PARTS.

3. BEFORE RETURNING THIS APPLIANCE TO THE CUSTOMER, YOU MAKE LEAKARE-CURRENT OR RESISTANCE MEASURMENTS TO DETERMINE THAT EXPOSED PARTS ARE ACCEPTABLY INSULATED FROM THE SUPPLY CIRCUIT.

P. C. BOARD (CONDUCTIVE SIDE VIEW) Figure 8

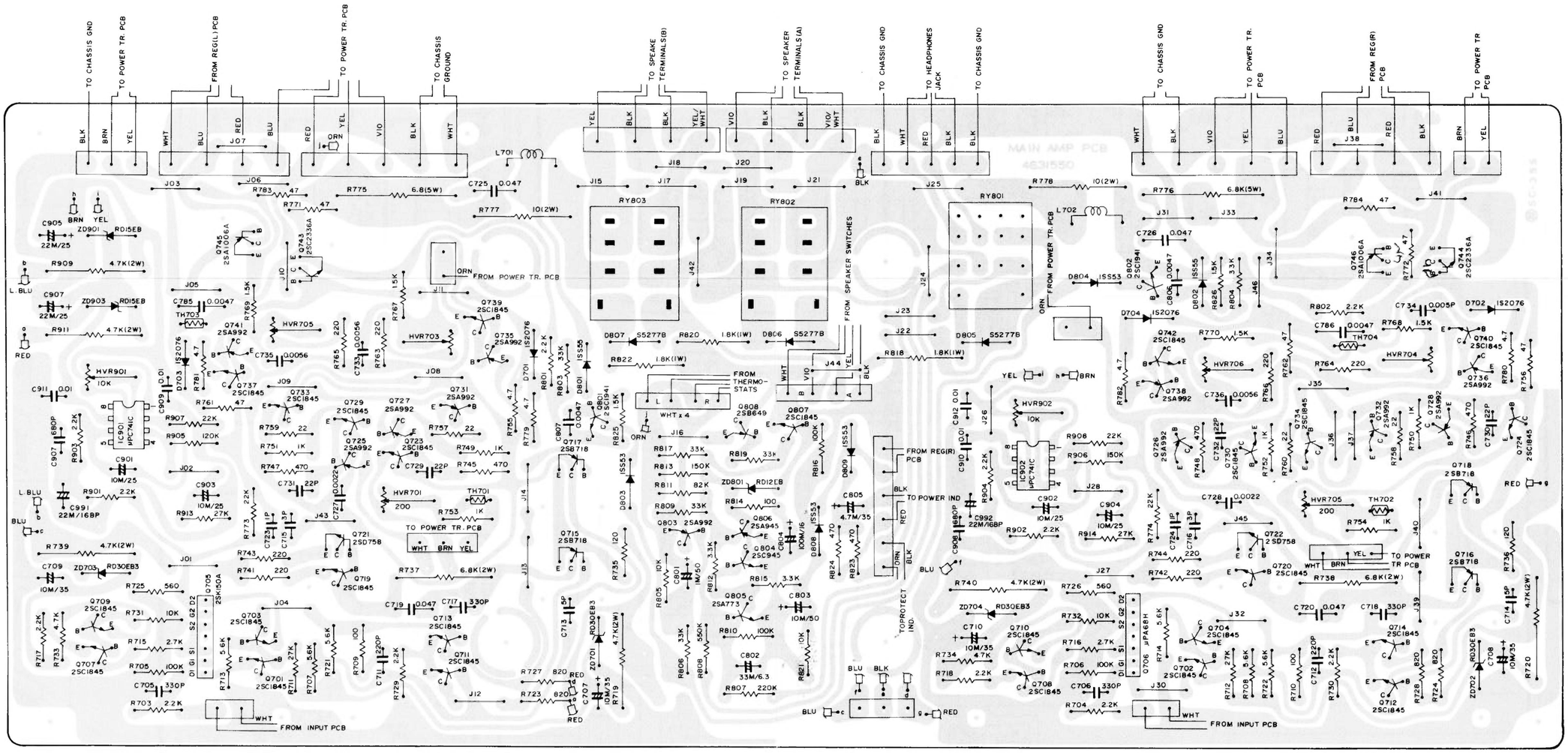

MAIN AMP PCB

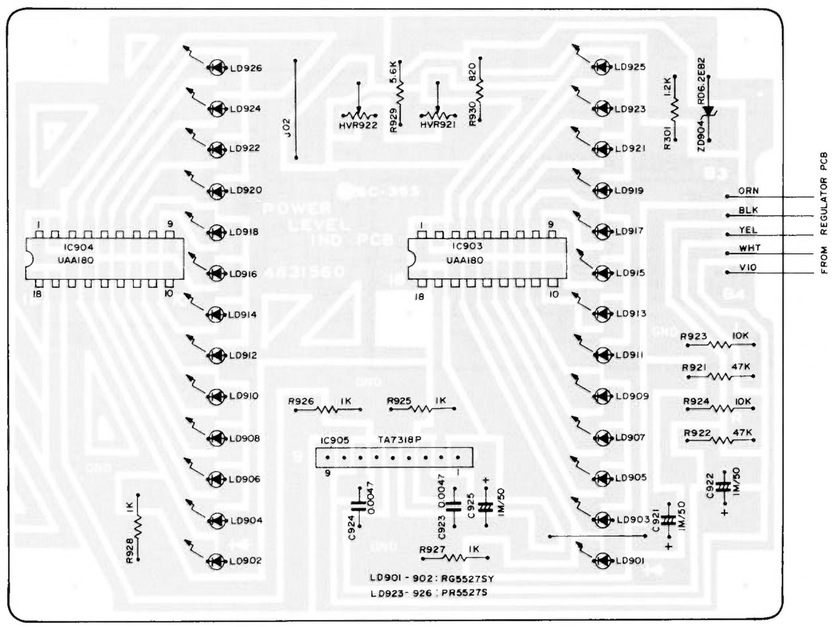

POWER LEVEL IND. PCB

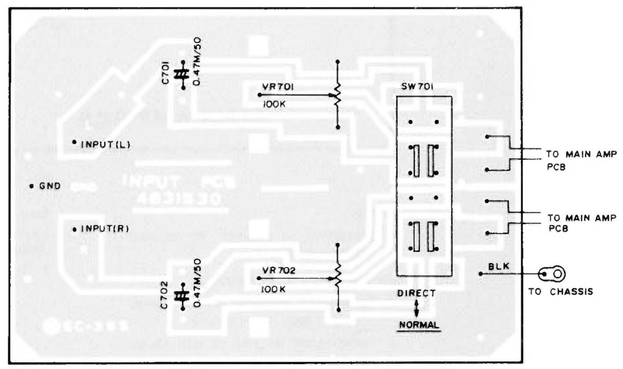

INPUT PCB

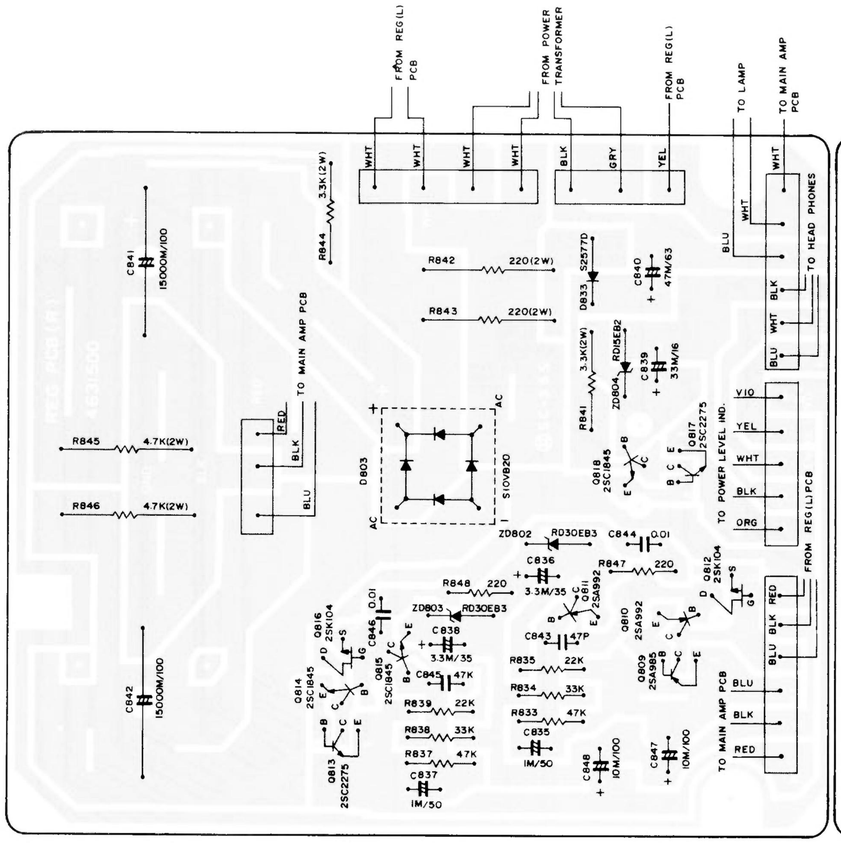

REGULATOR(R)PCB

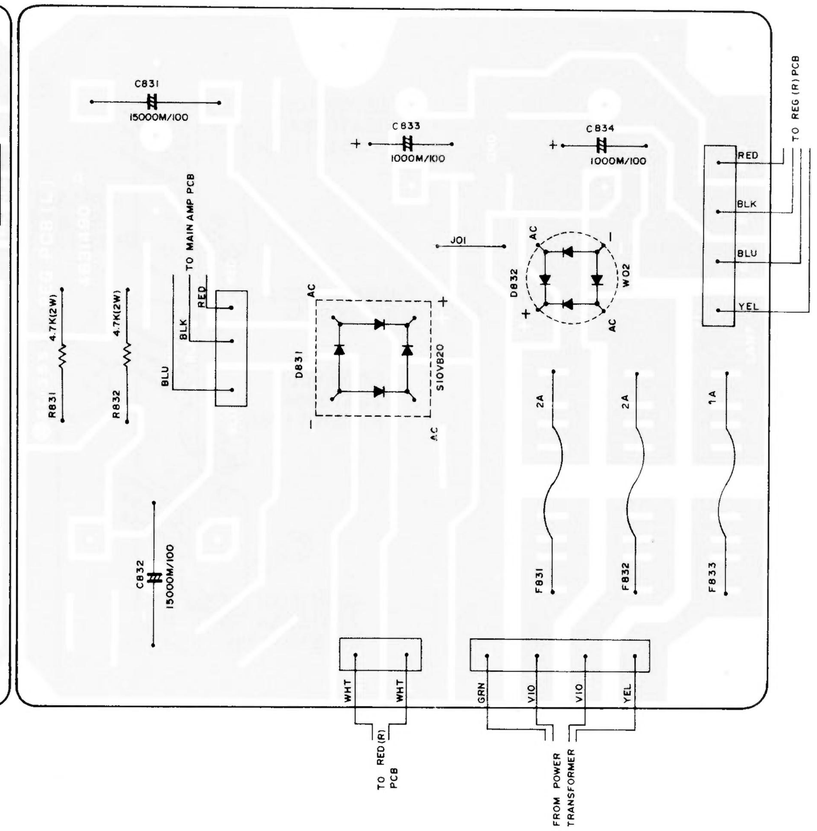

REGULATOR(L)PCB

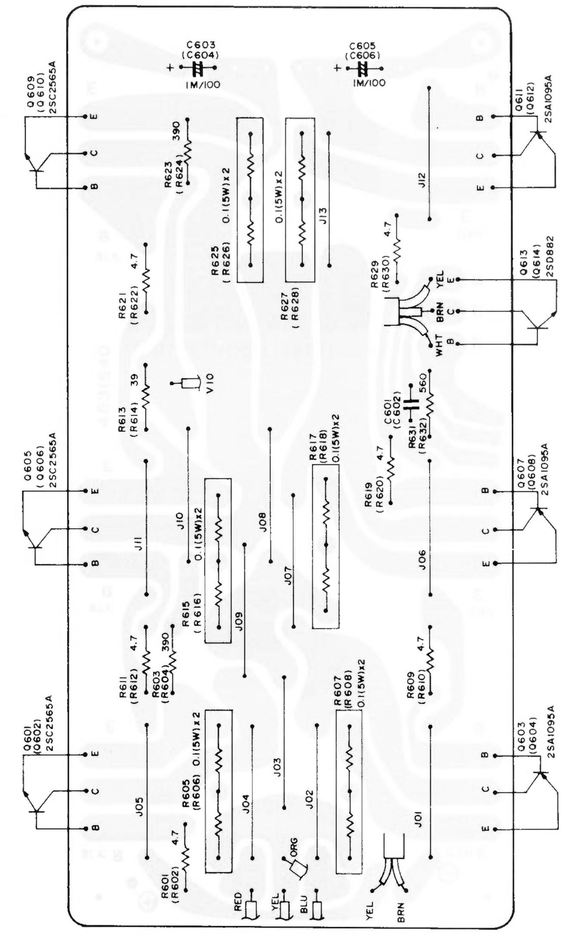

POWER TRANSISTORS PCB

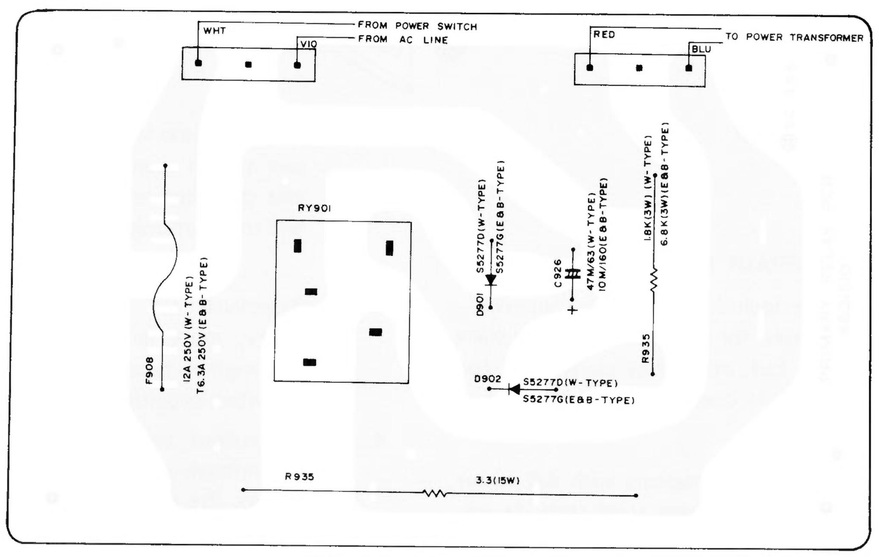

PRIMARY RELAY PCB

PARTS LOCATION

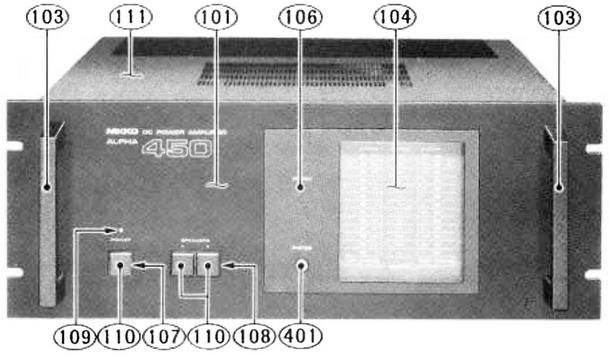

Photo 6

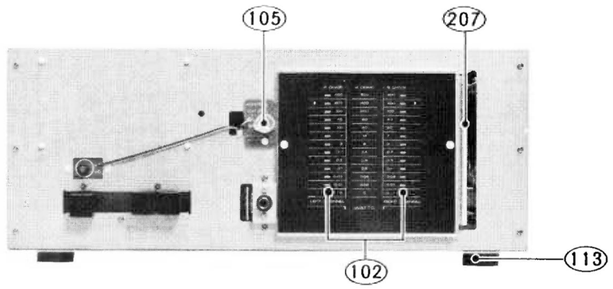

Photo 7

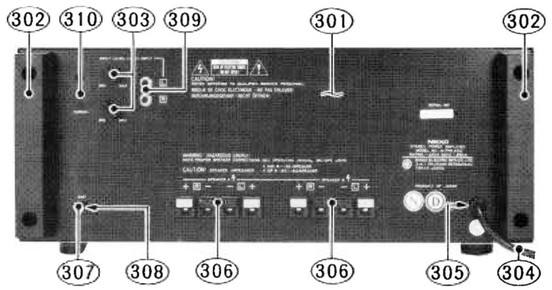

Photo 8

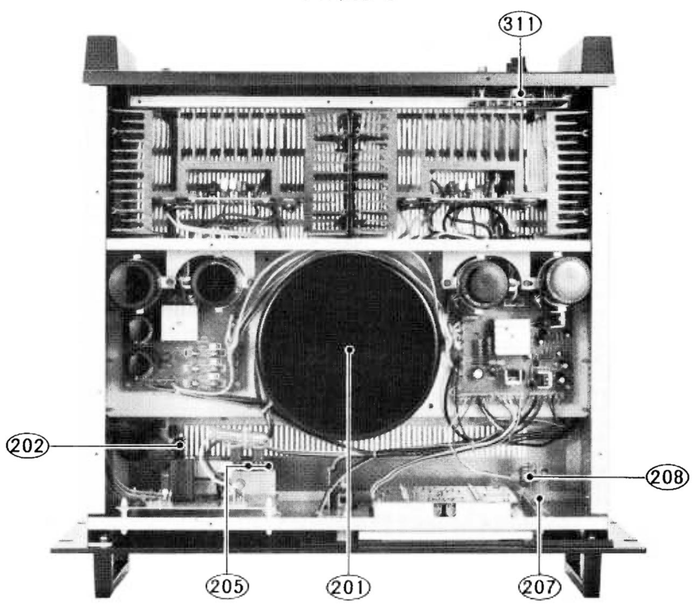

Photo 9

POWER TRANSISTORS MOUNTING ASSEMBLY

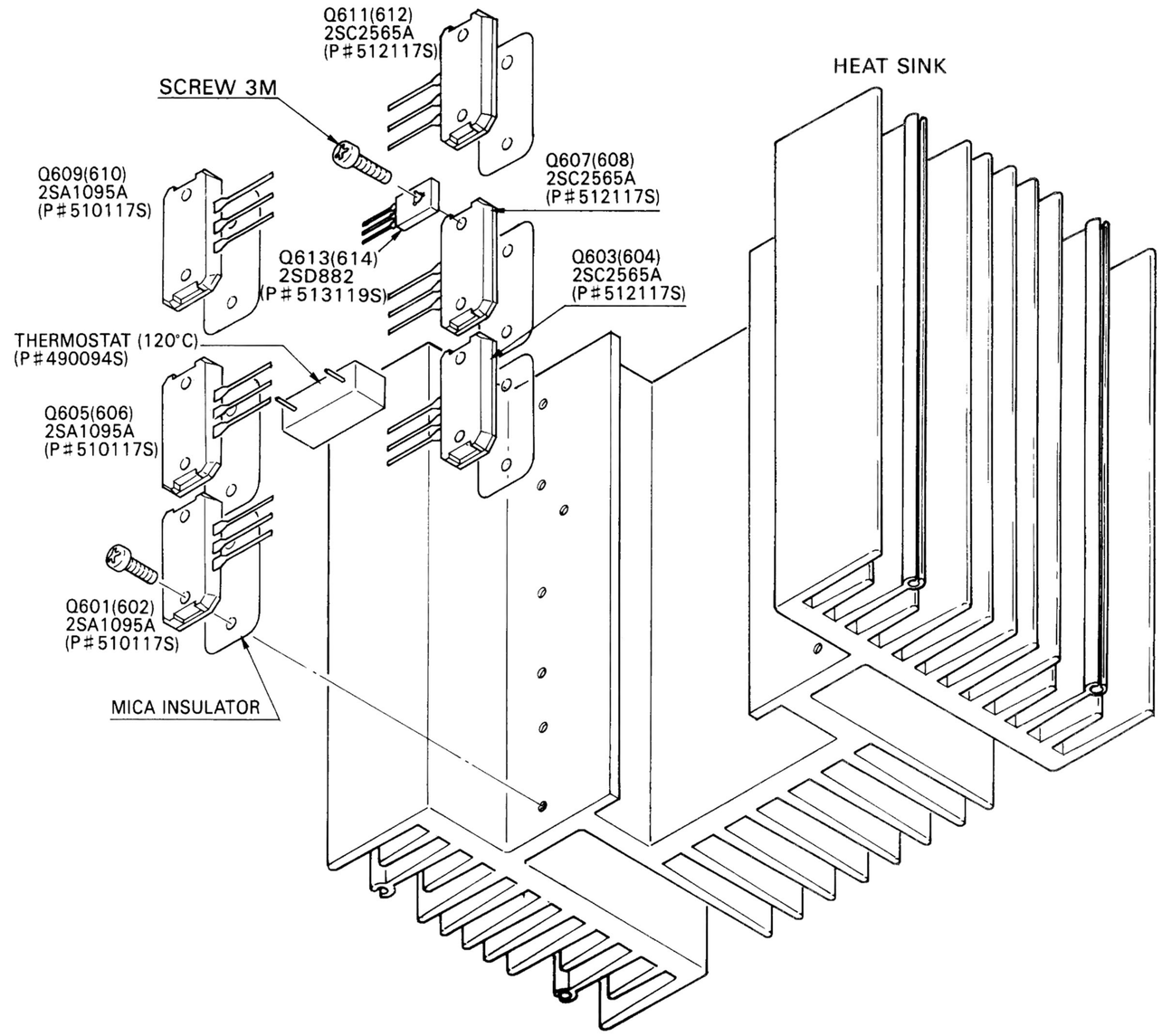

Figure 9

NOTE: For best heat conduction, use thermally conductive silicon grease between the power transistor and the mica insulator and between the insulator and the heat sink.

PRECAUTIONS FOR REPAIR SERVICE

Many of these items are included just as a reminder — they are normal procedures for experienced technicians. Short-cuts can be taken: but, often they cause additional damage to transistors, circuit components or the printed circuit board.

1. **Do not** bridge electrolytic capacitors with AC power. The resultant surges may damage solid state devices.
2. **Do not** bias the base of any transistor while voltage is being applied to its collector.
3. Replacements for output and driver transistors, if necessary, must be made from the same **hfe** group as the original type. Be sure to include this information when ordering replacement transistors.
4. If one output transistor burns out (open or shorts), always remove **all** output transistors in that channel and check the bias adjustment, the control and other parts in the network with an ohmmeter before inserting a new transistor. All output transistors in one channel will be destroyed if the base biasing circuit is open in the emitter end.

PARTS LIST

NOTES:

1. ★ The KEY NUMBER (#) marked with a (★) on parts list relate to number of three digits with a (◯). (Photo 6 ~ 9)
2. + Numberals in file indicate the quantity of parts used in one type.
3. ++

TR :	Transistor
FET :	Field effect transistor
VR :	Volume control (Variable resistor)
RES :	Carbon film fixed resistor
MO-RES :	Metal oxide film fixed resistor
CEM-RES :	Cemented wirewound fixed resistor
FP :	Flame proof
C-CAP :	Ceramic capacitor
E-CAP :	Aluminum electrolytic capacitor
M-CAP :	Polyester film capacitor
S-CAP :	Polystyrene film capacitor
T-CAP :	Tantalum electrolytic capacitor
BP-CAP :	Bipolar electrolytic capacitor
LC-CAP :	Low current leakage electrolytic capacitor.

4. Assemblies and parts are subject to change without notice.
5. Parts ordering procedure:
   A. DO NOT USE THE "KEY" NUMBER AND "SYMBOL" NUMBER. (these are control # for the factory only)
   B. Include in any order
      a. Part number.
      b. Part description.
      c. Model number.

      (any of the above lacking from an order may delay shipment of that order.)

CAUTION:

The ⚠ mark, the KEY NO. and the SYMBOL NO. circled with rectangle in the schematic diagram and the shaded are in the parts list designate components which have special characteristics important for safety and should be replaced only with types identical to those in the original circuit or specified in the parts list.

KEY NO.	SYMBOL NO.	TYPE+ W	E	B	DESCRIPTION++	PART NO.
					PACKING MATERIALS & ACCESSORIES	
001		1	1	1	Carton box	9826840
002		2	2	2	Pad	9840960
003		1	1	1	Sack, polyethylen cloth	9640750
004		1	1	1	Sack, polyethylen cloth – #13	9640320
005a		1	–	–	Manual, instructions – English and French	960432E
005b		–	1	1	Manual, instructions – in five different languages	960432K
007a		1	–	–	Card, warranty – U.S.A.	967046A
007b		1	–	–	Card, warranty – Canada	967044A
008		1	–	–	List, service stations	9690300
009		1	1	1	Cord, RCA phono pin plug – 2T-1	962014A
					CABINET ASSEMBLY	
★101a		1	1	1	Panel, front – SILVER	7886540
★101b		1	1	1	Panel, front – BLACK	7886530
★102b		1	1	1	Panel, power level indicator – BLACK	7871320
★103a		2	2	2	Handle – 120G – SILVER	7490360
★103b		2	2	2	Handle – 120B – BLACK	7490210
★104		1	1	1	Window, panel	7803210
★105		1	1	1	Spacer, LED	7002130
★106		1	1	1	Globe, LED – protection indicator	7402540
★107		1	1	1	Guide, button – 1P18 – power switch	7402550
★108		1	1	1	Guide, button – 2P18 – speakers selector	7402560
★109		1	1	1	Globe, LED – input power indicator	7402120
★110a		3	3	3	Button, Push – M18GL – power/speaker, SILVER	7853940
★110b		3	3	3	Button, push – M18BK – power/speaker, BLACK	7852300
★111		1	1	1	Cover, top	7821090
112		1	1	1	Plate, bottom	7326250
★113		4	4	4	Foot, polyethylen – 30ϕx14	7400780
					CHASSIS ASSEMBLY	
⚠ ★201a		1	–	–	Transformer, power – T-1-388 – AC120V	1103880
⚠ ★201b		–	1	1	Transformer, power – T-1-389 – AC220 or 240V	1103890
⚠ ★202a		1	–	–	Switch, push – ESB-99354T – power	4041830
⚠ ★202b		–	1	1	Switch, push – ESB 90179S – power	4041600
⚠ 203a		1	1	1	C-CAP 0.0047uf	239472A
204		–	1	1	Cover, C-CAP	7400960
★205		1	1	1	Switch, twin push – SUF-24 – speakers	4041040
★207		1	1	1	Light guide, level indicator	7401580
★208		1	1	1	Lamp – 8V 0.3A	5808200
					BACK PLATE ASSEMBLY	
★301a		1	–	–	Plate, back – (W)	7328640
★301b		–	1	1	Plate, back – (E)	732865A
★302		2	2	2	Block, terminal guard	7402130
★303		2	2	2	Knob – P2BK-1613DL – input level	7852350
⚠ ★304a		1	–	–	Cord, AC line – SPT-2	606008A
⚠ ★304b		–	1	–	Cord, AC line – CEE-2T	600511A
⚠ ★304c		–	1	1	Cord, AC line – BS	600515A
⚠ ★305a		1	–	–	Bush, power cord – SR-4N-4	7400690
⚠ ★305b		–	1	1	Bush, power cord – SR-6W-1	7400740
★306		1	1	1	Terminal, speakers – screw type 4P	4450490
★307		1	1	1	Shaft, GND terminal – MK-3	7152050
★308		1	1	1	Nut, GND terminal – MK-2	7152060
					(INPUT PCB SECTION)	
★309		1	1	1	Terminal, RCA phono pin jack	4442070
★310		1	1	1	Switch, slide – SSB-042 – normal-direct selector	4020560
★311		2	2	2	VR 100kohm (B) – input level control	4310630
	C701,702	2	2	2	BP-CAP 0.47uf 50V	225505C
	R701,702	2	2	2	RES 1meg.ohm 5% ¼W	328105J
					PRIMARY RELAY PC BOARD ASSEMBLY	
					(PRIMARY RELAY SECTION)	
⚠	F901	1	–	–	Fuse – 12A 250V MGC	4700750
⚠	F901	–	1	1	Midget fuse – T6.3A 250V	4720490
⚠	RY901	1	–	–	Relay – LY1-0-US TV-5	1700390
⚠	RY901	–	1	1	Relay – FRL-264D100	1700400
⚠	D901,902	2	–	–	Diode S5277D	560047S
⚠	D901,902	–	2	2	Diode S5277G	560069S
⚠	C926	1	–	–	E-CAP 47uf 63V	211625Q
⚠	C926	–	1	1	E-CAP 10uf 160V	261120Q
⚠	C934	1	1	1	CEM-RES 3.3ohm 10% 15W	387338U

www.hifiengine.com

PART ORDERING PROCEDURE ----- DO NOT USE THE "KEY" NUMBER AND "SYMBOL" NUMBER. (these are control # for the factory only.) Include in any order: a. Part number, b. Part description, c. Model number. (any of the above lacking from an order may delay shipment of the order.)

KEY NO.	SYMBOL NO.	TYPE+ W	E	B	DESCRIPTION++			PART NO.
⚠	R935	1	–	–	FP-MO-RES 1.8kohm	5%	3W	363182L
⚠	R935	–	1	1	FP-MO-RES 6.8kohm	5%	3W	363682L
					(INPUT POWER INDICATOR SECTION)			
	LD928	1	1	1	LED BR5504S			5060300
		1	1	1	Spacer, LED			7903140
					(PROTECTION INDICATOR SECTION)			
	LD927	1	1	1	LED PR5527S			5060270
		1	1	1	Spacer, LED			7903270
					(HEADPHONES SECTION)			
★401		1	1	1	Jack, headphones			4550260
	R932,933	2	2	2	FP-MO-RES 390ohm	5%	2W	362391L
					POWER TRANSISTORS PC BOARD ASSEMBLY – LEFT CHANNEL ONLY			
	Q601,605, Q609	3	3	3	TR 2SC2565A (R or O or Y)			512117S
	Q603,607 Q611	3	3	3	TR 2SA1095A (R or O or Y)			510117S
	Q613	1	1	1	TR 2SD882 (P or Q)			513119S
		1	1	1	Thermostat – OHD-120M			490094S
	C603,605	2	2	2	E-CAP 1uf 100V			211810Q
	C601	1	1	1	M-CAP 0.001uf	10%	50V	222102K
	R601,609 R611,619, R621,629	6	6	6	FP-RES 4.7ohm	5%	¼W	328478L
	R603,613, R623	3	3	3	FP-RES 390ohm	5%	¼W	328391L
	R631	1	1	1	RES 560ohm	5%	¼W	328561J
	Others	6	6	6	CEM-RES 0.1ohm	10%	2Wx2	382109P
					MAIN AMP PC BOARD ASSEMBLY			
	L701,702	1	1	1	Coil, choke – 1uH			1210960
	IC901,902	2	2	2	IC μPC741C			518088S
	Q701 ~ Q704	4	4	4	TR 2SC1845 (E or F)			512115S
	Q705,706	2	2	2	FET μPA68H (L)			516050S
	Q707 ~ Q714	8	8	8	TR 2SC1845 (E or F)			512115S
	Q715 ~ Q718	4	4	4	TR 2SB718 (C)			511117S
	Q719,720	2	2	2	TR 2SC1845 (E or F)			512115S
	Q721,722	2	2	2	TR 2SD758 (C)			513120S
	Q723,724	2	2	2	TR 2SC1845 (E or F)			512115S
	Q725 ~ Q728	4	4	4	TR 2SA992 (E or F)			510110S
	Q729,730	2	2	2	TR 2SC1845 (E or F)			512115S
	Q731,732	2	2	2	TR 2SA992 (E or F)			510110S
	Q733 ~ Q740	6	6	6	TR 2SC1845 (E or F)			512115S
	Q743,744	2	2	2	TR 2SC2336A (P, Q)			512151S
	Q745,746	2	2	2	TR 2SA1006A (P, Q)			510136S
	D701 ~ D704	4	4	4	Diode 1S2076			501019S
	ZD701 ~ ZD704	4	4	4	Zener diode RD30EB3			502066S
	ZD901,902	2	2	2	Zener diode RD15EB2			502050S
	TH701,702	2	2	2	Thermistor SDT-35			5400190

KEY NO.	SYMBOL NO.	TYPE+ W	E	B	DESCRIPTION++			PART NO.
	TH703,704	2	2	2	Thermistor D2FHL-103S			5400180
	C703,704	2	2	2	E-CAP 10uf 100V			211820Q
	C705,706	2	2	2	C-CAP 330p 10%	50V	SL	232331K
	C707 ~ C710	4	4	4	E-CAP 10uf 35V			211420Q
	C711,712	2	2	2	C-CAP 220pf 10%	50V	SL	232221K
	C713,714	2	2	2	C-CAP 5pf ± 0.5pf	500V	SL	234509D
	C715,716	2	2	2	C-CAP 3pf ± 0.5pf	500V	SL	237309D
	C717,718	2	2	2	C-CAP 330pf 10%	50V	SL	232331K
	C719,720	2	2	2	M-CAP 0.047uf 10%	100V		226473K
	C721,722	2	2	2	E-CAP 10uf 100V			211820Q
	C723,724	2	2	2	C-CAP 1pf ± 0.5pf	500V	SL	234109D
	C725,726	2	2	2	M-CAP 0.047uf 10%	200V		272473K
	C727,728	2	2	2	M-CAP 0.0022uf 10%	50V		222222K
	C729 ~ C732	4	4	4	C-CAP 22pf 10%	50V	SL	232220K
	C733 ~ C736	4	4	4	M-CAP 0.0056uf 10%	50V		222562K
	C785,786	2	2	2	M-CAP 0.047uf 10%	100V		226473K
	C901 ~ C904	4	4	4	BP-CAP 10uf 25V			215320C
	C905,907	2	2	2	E-CAP 22uf 25V			211322Q
	C909 ~ C912	4	4	4	C-CAP 0.01uf +80, –20%	50V	YG	231103Z
	C991,992	1	1	1	BP-CAP 22u 16V			215222C
	HVR701,702	2	2		Potentiometer – 200ohm			4301290
	HVR703,704	2	2		Potentiometer – 1kohm			4301300
	HVR901,902	2	2		Potentiometer – 10kohm			4301280
	R703,704	2	2	2	RES 2.2kohm	5%	¼W	328222J
	R705,706	2	2	2	RES 100kohm	5%	¼W	328104J
	R707,708	2	2	2	RES 5.6kohm	5%	¼W	328562J
	R711 ~ R714	4	4	4	RES 27kohm	5%	¼W	328273J
	R715,716	2	2	2	RES 2.7kohm	5%	¼W	328272J
	R717,718	2	2	2	RES 2.2kohm	5%	¼W	328222J
	R719,720	2	2	2	FP-MO-RES 4.7kohm	5%	2W	362472L
	R721,722	2	2	2	RES 5.6kohm	5%	¼W	328562J
	R723,724	2	2	2	RES 820ohm	5%	¼W	328821J
	R725,726	2	2	2	RES 560ohm	5%	¼W	328561J
	R727,728	2	2	2	RES 820ohm	5%	¼W	328821J
	R729,730	2	2	2	RES 2.2kohm	5%	¼W	328222J
	R731,732	2	2	2	RES 10kohm	5%	¼W	328103J
	R733,734	2	2	2	RES 4.7kohm	5%	¼W	328472J
	R735,736	2	2	2	FP-RES 120ohm	5%	¼W	328121L
	R737,738	2	2	2	FP-MO-RES 6.8kohm	5%	2W	362682L
	R739,740	2	2	2	FP-MO-RES 4.7kohm	5%	2W	362472L
	R741 ~ R744	4	4	4	FP-RES 220ohm	5%	¼W	328221L
	R745 ~ R748	4	4	4	RES 470ohm	5%	¼W	328471J
	R749 ~ R752	4	4	4	RES 1kohm	5%	¼W	328102J
	R755,756	2	2	2	FP-RES 47ohm	5%	¼W	328470L
	R757 ~ R760	4	4	4	RES 22ohm	5%	¼W	328220J
	R761,762	2	2	2	FP-MO-RES 47ohm	5%	¼W	328470L
	R763 ~ R766	4	4	4	RES 220ohm	5%	¼W	328222L
	R767 ~ R770	4	4	4	RES 1.5kohm	5%	¼W	328152J
	R771,772	2	2	2	FP-MO-RES 150ohm	5%	1W	361150L
	R777,778	2	2	2	FP-MO-RES 10ohm	5%	2W	362100L
	R775,776	2	2	2	CEM-RES 6.8ohm	10%	5W	384688K
	R797,798	2	2	2	RES 22kohm	5%	¼W	328223J
	R901 ~ R904	4	4	4	RES 2.2kohm	5%	¼W	328222J
	R905,906	2	2	2	RES 120kohm	5%	¼W	328124J
	R907,908	2	2	2	RES 22kohm	5%	¼W	328223J
	R909,911	2	2	2	FP-MO-RES 4.7kohm	5%	2W	362472L

www.hifiengine.com

PART ORDERING PROCEDURE ----- DO NOT USE THE "KEY" NUMBER AND "SYMBOL" NUMBER. (these are control # for the factory only.) Include in any order: a. Part number, b. Part description, c. Model number. (any of the above lacking from an order may delay shipment of the order.)

KEY NO.	SYMBOL NO.	TYPE+ W	E	B	DESCRIPTION++	PART NO.
					(PROTECTOR SECTION)	
	RY801	1	1	1	Relay – DC48V	1700380
	RY802,803	2	2	2	Relay – DC48V	1700330
		4	4	4	Magnet – 1285	7903170
	Q801,802	2	2	2	TR 2SC1941 (L or K)	512112S
	Q803	1	1	1	TR 2SA992 (E or F)	510220S
	Q804,806	2	2	2	TR 2SC945L (P or Q)	515077S
	Q805	1	1	1	TR 2SA733A (P or Q)	514074S
	Q807	1	1	1	TR 2SC2240 (BL)	512116S
	Q808	1	1	1	TR 2SB649 (B or C)	511111S
	D801,802	2	2	2	Diode 1SS55	501024S
	D803,804	2	2	2	Diode 1SS53	501023S
	D805 ~ D807	3	3	3	Diode S5277B	560046S
	D808,809	2	2	2	Diode 1SS53	501023S
	ZD801	1	1	1	Zener diode RD12EB3	502058S
	C801	1	1	1	E-CAP 1uf 50V	211510Q
	C802	1	1	1	BP-CAP 33uf 6.3V	215053C
	C803,804	2	2	2	E-CAP 100uf 16V	211230Q
	C805	1	1	1	E-CAP 10uf 50V	211520Q
	C806	1	1	1	E-CAP 4.7uf 35V	211415Q
	REGULATOR (L) PC BOARD ASSEMBLY					
	F831,832	2	–	–	Fuse – 2A 250V MGC	4700620
	F833	1	–	–	Fuse – 1A 250V MGC	4700590
	F831,832	–	2	2	Midget fuse – T2A 250V	4720370
	F833	–	1	1	Midget fuse – T1A 250V	4720330
	D831	1	1	1	Diode S10VB20	560058S
	D832	1	1	1	Diode W02	560061S
	C831,832	2	2	2	E-CAP 15000uf 100V	2100100
	C833,834	2	2	2	E-CAP 1000uf 100V	2100110
	R813,832	1	1	1	FP-MO-RES 4.7kohm 5% 2W	362472L
	REGULATOR (R) PC BOARD ASSEMBLY					
	Q809	1	1	1	TR 25A985 (P or Q)	510118S
	Q810,811	2	2	2	TR 2SA992 (E or F)	510110S

KEY NO.	SYMBOL NO.	TYPE+ W	E	B	DESCRIPTION++	PART NO.
	Q812	1	1	1	FET 2SK104 (F)	516026S
	Q813	1	1	1	TR 2SC2275 (P or Q)	512120S
	Q814,815	2	2	2	TR 2SC1845 (E or F)	512115S
	Q816	1	1	1	FET 2SK104 (F)	516026S
	Q817	1	1	1	TR 2SC2275 (P or Q)	512120S
	Q818	1	1	1	TR 2SC1845 (E or F)	512115S
	D802,803	2	2	2	Zener diode RD30EB3	502066S
	D804	1	1	1	Zener diode RD15EB2	502050S
	D833	1	1	1	Diode S5277B	560046S
	D834	1	1	1	Diode S10VB20	560058S
	C835,837	2	2	2	E-CAP 1uf 50V	211510Q
	C836,837	2	2	2	E-CAP 3.3uf 35V	211413Q
	C839	1	1	1	E-CAP 33uf 16V	211223Q
	C840	1	1	1	E-CAP 47uf 63V	211625Q
	C841,842	2	2	2	E-CAP 15000uf 100V	2100100
	R833,837	1	1	1	RES 47kohm 5% ¼W	328473J
	R834,838	1	1	1	RES 33kohm 5% ¼W	328333J
	R835,839	1	1	1	RES 22kohm 5% ¼W	328223J
	R841	1	1	1	FP-MO-RES 3.3kohm 5% 2W	362332L
	R842,843	2	2	2	FP-MO-RES 220ohm 5% 2W	362221L
	R844	1	1	1	FP-MO-RES 4.7kohm 5% 1W	361472L
	R845,846	2	2	2	FP-MO-RES 4.7kohm 5% 2W	362472L
	POWER LEVEL INDICATOR PCB ASSEMBLY					
	IC903,904	2	2	2	IC UAA180	518066S
	IC905	1	1	1	IC TA7318P	518067S
	ZD904	1	1	1	Zener diode RD6.2EB2	502048S
	LD901 ~ LD922	22	22	22	LED PG5527SY – green	5060280
	LD923 ~ LD926	4	4	4	LED PR5527S – red	5060270
	C921,922	2	2	2	E-CAP 1uf 50V	211510Q
	C923,924	2	2	2	M-CAP 0.0047uf 10% 50V	222472K
	C925	1	1	1	E-CAP 1uf 50V	211510Q
	HVR921,922	2	2	2	Potentiometer – 3kohm	4301340
	R921,922	2	2	2	RES 47kohm 5% ¼W	328473J
	R923,924	2	2	2	RES 10kohm 5% ¼W	328103J
	R925 ~ R928	4	4	4	RES 1kohm 5% ¼W	328102J
	R929	1	1	1	RES 820ohm 5% ¼W	328820J
	R930	1	1	1	RES 3.3kohm 5% ¼W	328322J
	R931	1	1	1	RES 1.2kohm 5% ¼W	328122J

www.hifiengine.com

SAFETY INSTRUCTIONS

* PRECAUTIONS DURING SERVICING

1. Parts identified by the symbol parts are critical for safety. Replace only with same parts number specified.

2. Other parts and assemblies are specified for conformance with such regulations as those applying to spurious radiation.
   These must also be replaced only with replacements.

   Examples : RF converters, tuner units, RF cables, noise blocking capacitors, noise blocking filters, etc.

3. Use specified internal wiring

   a) Primary leads

   b) Wires covered with PVC tubing

   c) Double insulated wire

4. Use specified insulating materials for hazardous live parts.

   a) Insulation Tape

   b) Insulated Barriers (Spacers)

   c) PVC Tubing

   d) Plastic screws for fixing microswitch (Especially in turntable)

   e) Terminal strips

5. When replacing the primary components (transformer, power supply cord, switch, switch by-pass capacitor, etc.), wrap ends of wires securely about the terminals before soldering.

   Where hand soldering is involved a minimum spacing below between terminals of uninsulated live parts of primary or supply circuitry through air or over surface is to be maintained.

   110V, 120V appliance : more than 3 mm spacing

   220V, 240V appliance : more than 6 mm spacing

6. Observe that wires do not contact heat producing parts (heatsinks, oxide metal resistors, rectifiers, etc.)

7. Check that replaced wires do not contact sharp edge or pointed parts.

8. Do not remain an electric conductive parts (screws, droplets, etc.) inside the appliance.

* SAFETY RECHECK AFTER SERVICING

Confirm the specified insulation resistance between power plug prongs and externally exposed parts of the appliance is greater than 10M ohms, but for equipment with external antenna terminals (tuner, receiver, etc.) and is specified insulation resistance should be more than 2.2M ohms (ground terminals, in-output jacks, etc.).

www.hifiengine.com

SEMICONDUCTOR DATA

TRANSISTORS

† NOTES
Ge : Germanium
Si : Sillicon

A : Alloy
B : Base
D : Diffused
Dd : Double-diffused

Df : Drift-field
E : Epitaxial
G : Grown
J : Junction

M : Mesa
P : Planer
Pc : Point-contact
Td : Triple-diffused

DEVICE TYPE	APPLICATIONS	STRUCTURE†	MAXIMUM RATINGS Absolute-Maximum Values: (T_A = 25°C unless otherwise specified)					ELECTRICAL CHARACTERISTICS Typical Values: (T_A = 25°C unless otherwise specified)													MANUFACTURER
			Collector-to-Base Voltage V_{CBO} (V)	Emitter-to-Base Voltage V_{EBO} (V)	Collector Current I_C (mA)	Collector Dissipation P_C (mW)	Junction Temperature T_J (°C)	Collector Cutoff Current I_{CBO} (uA)	V_{CB} (V)	Static Forward-Current Transfer Ratio h_{FE}	V_{CE} (V)	I_C (mA)	Collector-Emitter Saturation Voltage $V_{CE(sat)}$ (V)	I_C (mA)	I_B (mA)	Gain-Bandwidth Product f_T f_{ob}* (MHz)	V_{CE} V_{CB}* (V)	I_E I_C* (mA)	Output Capacitance C_{ob} (pF)	Others	
2SA733A (P, Q)	AF, General	PNP Si-E	−60	−5	−100	250	125	−0.1 max.	−60	135 ~ 400	−6	−1	−0.3 max.	−100	−10	450 max.	−6	10	6 max.		NEC
2SA985 (P, Q)	AF, Power, amp.	PNP Si-E	−120	−5	−1.5A	25W (T_C=25°C)	150	−1 max.	−120	100 ~ 320	−5	−300	−2 max.	−1A	−100	180	−5	−200*	29	Complementary to 2SC2275	NEC
2SA992 (E, F)	AF, Low noise	PNP Si-E	−120	−5	−50	500	125	−0.05 max.	−120	300 ~ 800	−5	−1	−0.3 max.	−10	−1	100	−6	1	3 max.	Complementary to 2SC1845	NEC
2SA1095A (R, O, Y)	AF, Power amp.	PNP Si-E	−180	−5	−15A	150W (T_C=25°C)	150	−50 max.	−160	55 ~ 240	−5	−1A	−2 max.	−5A	−500	60	−10	−1A*	350	Complementary to 2SC2565A	TOSHIBA
2SB649 (B, C)	AF, Driver	PNP Si-E	−180	−5	1.5A	20W (T_C=25°C)	150	−10 max.	−160	60 ~ 200	−5	−150	−1 max.	−500	−50	140	−5	−150*	27		HITACHI
2SA1006A	PA	PNP Si-E	−200	−5.0	−1.5	25W (T_C=25°C)	150	−1	−150	100 ~ 320	−5.0	−150	−0.4	−500	−50	80	−10	−0.1A		Complementary to 2SC2336A	NEC
2SB718 (C)	AF, Driver	PNP Si-E	−200	−5	−50	1250	150	−10 max.	−160	100 ~ 200	−5	−10	−2 max.	−30	−3	140	−5	−10*	5.5	Complementary to 2SD758	HITACHI
2SC945L (P, Q)	AF, General	NPN Si-E	60	5	100	250	125	0.1 max.	60	135 ~ 400	6	1	0.3 max.	100	10	450 max.	6	−10	5 max.		NEC
2SC1845 (E, F)	AF, Low noise	NPN Si-E	120	5	50	500	125	0.05 max.	120	300 ~ 800	6	1	0.3 max.	01	1	110	6	−1	2.5 max.	Complementary to 2SA992	NEC
2SC1941 (L, K)	AF, Driver	NPN Si-E	160	5	50	800	150	0.1 max.	160	135 ~ 400	10	1	0.6 max.	20	2	120	10	−10	3 max.		NEC
2SC2275 (P, Q)	AF, Power amp.	NPN Si-E	120	5	1.5A	25W (T_C=25°C)	150	1 max.	120	100 ~ 320	5	300	2 max.	1A	100	200	5	200*	19	Complementary to 2SA985	NEC
2SC2565A (R, O, Y)	AF, Power amp.	NPN Si-E	180	5	15A	150W (T_C=25°C)	150	50 max.	160	55 ~ 240	5	1A	2 max.	5A	500	80	10	1A*	200	Complementary to 2SA1095A	TOSHIBA
2SC2336A	PA	NPN Si-E	200	5.0	1.5	25W (T_C=25°C)	150	1.0	150	100 ~ 320	5.0	150	0.3	500	50	95	10	0.1A		Complementary to 2SA1006A	NEC
2SD758 (C)	AF, Driver	NPN Si-E	200	5	50	1250	150	10 max.	160	100 ~ 200	5	10	2 max.	30	3	140	5	10*	3.8	Complementary to 2SB718	HITACHI
2SD882 (P, Q)	AF	NPN Si-E	40	5	3A	10W (T_C=25°C)	150	1	30	100 ~ 320	2	20	0.5 max.	2A	200	90	5	−100	45		NEC

FIELD EFFECT TRANSISTOR

DEVICE TYPE	APPLICATIONS	STRUCTURE†	MAXIMUM RATINGS Absolute-Maximum Values: (T_A = 25°C unless otherwise specified)						ELECTRICAL CHARACTERISTICS Typical Values: (T_A = 25°C unless otherwise specified)																MANUFACTURER
			Gate-to-Drain Voltage V_{GDO} (V)	Gate-to-Source Voltage V_{GSO} (V)	Gate Current I_G (mA)	Drain Current I_D (mA)	Total Dissipation P_D (mW)	Channel Temperature T_{ch} (°C)	Gate Leak Current Test Conditions	I_{GSS} (nA)	Gate to Drain Breakdown Voltage Test Conditions	$V_{(BR)GDO}$ (V)	Drain Current Test Conditions	I_{DSS} (mA)	Gate to Source Cutoff Voltage Test Conditions	$V_{GS(off)}$ (V)	Forward Transfer Admittance Test Conditions	$\lvert Y_{fs}\rvert$ (m℧)	Feed Back Capacitance Test Conditions	C_{rss} (pF)	Power Gain (Common Source) Test Conditions	G_{PS} (dB)	Noise Figure Test Conditions	NF (dB)	
μPA68H (L)	AF, Low noise Differential amp.	Si N-channel junction (Dual)	−50	−50	10		200/unit	125	V_{GS}= −30V V_{DS}=0	−1 max.			V_{DS}=10V V_{GS}=0	2.6 ~6.5			V_{DS}=10V V_{GS}=0 f=1 kHz I_{DSS}= 3mA	12	V_{DG}=10V I_D=0 f=1 MHz	3			V_{DS}=10V R_g=1 kΩ I_D=1 mA f=1 kHz	2 max.	TOSHIBA

DIODES, LED'S

DEVICE TYPE	APPLICATIONS	STRUCTURE†	MAXIMUM RATINGS Absolute-Maximum Values: (T_A = 25°C unless otherwise specified)									ELECTRICAL CHARACTERISTICS Typical Values: (T_A = 25°C unless otherwise specified)							MANUFACTURER
			Reverse Surge Voltage V_{Rsurge} (V)	Peak Reverse Voltage V_{RM} (V)	Reverse Voltage V_R (V)	Peak Forward Voltage V_{FM} (V)	Peak Forward Current I_{FM} (mA)	Average Rectified Current I_O (mA)	Forward Surge Current $I_{F surge}$ (A)	Junction Temperature T_J (°C)	Total Power Dissipation P_D (mW)	Forward Current I_{Fmin} (mA)	Test Condition V_F (V)	Forward Voltage V_{Fmax} (V)	Test Condition I_F (mA)	Reverse Current I_{Rmax} (uA)	Test Condition V_R (V)	Others	
1SS53	Medium speed switching	Si-EP		35	30		300	100	2	200	500			0.8 1.0	1.0 30	0.1	30		NEC
1SS55	Medium speed switching	Si-EP		100	75		300	100	2	200	500			0.8 1.0	1.0 30	0.1	75		NEC
S5277B	Rectifier	Si-DJ		100			2.0A	1.0A	50A	150				1.2	1.0A	10	100		TOSHIBA
S5277D	Rectifier	Si-DJ		200			2.0A	1.0A	50A	150				1.2	1.0A	10	200		TOSHIBA
S5277G	Rectifier	Si-DJ		400			2.0A	1.0A	50A	150				1.2	1.0A	10	400		TOSHIBA
W02	Rectifier	Si-DJ (Bridge)			200	200		1.5A	50	125				1.0	1.0A	10		R_{th} - 50°C/W	GENERAL INSTRUMENT
S10VB -20	Rectifier	Si-DJ (Bridge)		200				10A	200	150				1.05		10			SHINDENGEN
PR -5527S	Lamp (red)	Gap			4		100	I_F=30		85	75			2.5	10	100	4	I_V= 1.2 mcd (I_F=10 mA)	STANLEY
PR -5527SY	Lamp (green)	Gap			4		100	I_F=50		85	125			2.5	20	100	4	I_V = 8 mcd (I_F=20 mA)	STANLEY
8R -5504S	Lamp (red)	GaAlAS			4		300	I_F=50		85	100			2.0	20	100	4	I_V=80 mcd (I_F=20 mA)	STANLEY

ZENER DIODES

DEVICE TYPE	APPLICATIONS	STRUCTURE†	MAXIMUM RATINGS Absolute-Maximum Values: (T_A = 25°C unless otherwise specified)			ELECTRICAL CHARACTERISTICS Typical Values: (T_A = 25°C unless otherwise specified)													MANUFACTURER
			Total Power Dissipation P_D (mW)	Zener Current I_Z (A)	Junction Temperature T_J (°C)	Zener Voltage V_Z MIN (V)	TYP (V)	MAX (V)	Test Conditions I_Z (mA)	Differential Resistance r_Z TYP (Ω)	MAX (Ω)	Test Conditions I_Z (mA)	Temperature Coefficient γ_Z TYP (%/°C)	MAX (%/°C)	Test Conditions I_Z (mA)	Reverse Current I_Z MAX (μA)	Test Conditions V_R (V)	Others	
RD6,2-EB2	Regulator	Si-J	400		175	5.96		6.27	20		20	20				5	3		NEC
RD15-EB2	Regulator	Si-J	400		175	13.89		14.62	10		30	10				2	11		NEC
RD30-EB3	Regulator	Si-J	400		175	28.36		29.82	5		130	5				2	23		NEC

www.hifiengine.com

INTEGRATED CIRCUITS μPC741C

- **Manufacturer:** NEC
- **Applications:** Operational Amplifier

ABSOLUTE MAXIMUM RATINGS

Supply Voltage	±18 V	Input Voltage	±15 V
Internal Power Dissipation	350 mW	Storage Temperature Range	−40°C to +125°C
Differential Input Voltage	±30 V	Operating Temperature Range	−20°C to +75°C

ELECTRICAL CHARACTERISTICS (V_{CC} = ±15V, T_A = +25°C unless otherwise noted.)

PARAMETER	CONDITIONS	MIN	TYP	MAX	UNITS
Input Offset Voltage	$R_S \leqslant 10\,k\Omega$		1.0	6.0	mV
Input Offset Current			20	200	nA
Input Bias Current			80	500	nA
Large-Signal Voltage Gain	$R_L \geqslant 2\,k\Omega$ V_{out} = ±10V	108	106		dB
Output Voltage Swing	$R_L \geqslant 10\,k\Omega$	12	±14		V
Common Mode Rejection Ratio	$R_S \leqslant 10\,k\Omega$	70	90		dB
Supply Voltage Rejection Ratio	$R_S \leqslant 10\,k\Omega$		30	150	μV/V
Power Consumption			45	85	mW

TERMINAL GUIDE (TOP VIEW)

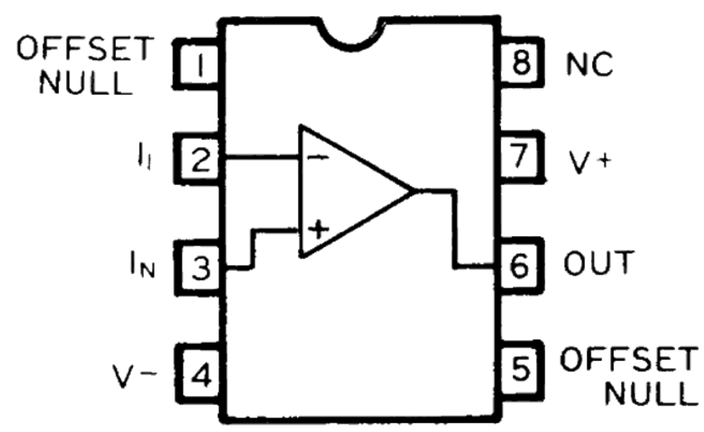

EQUIVALENT CIRCUIT

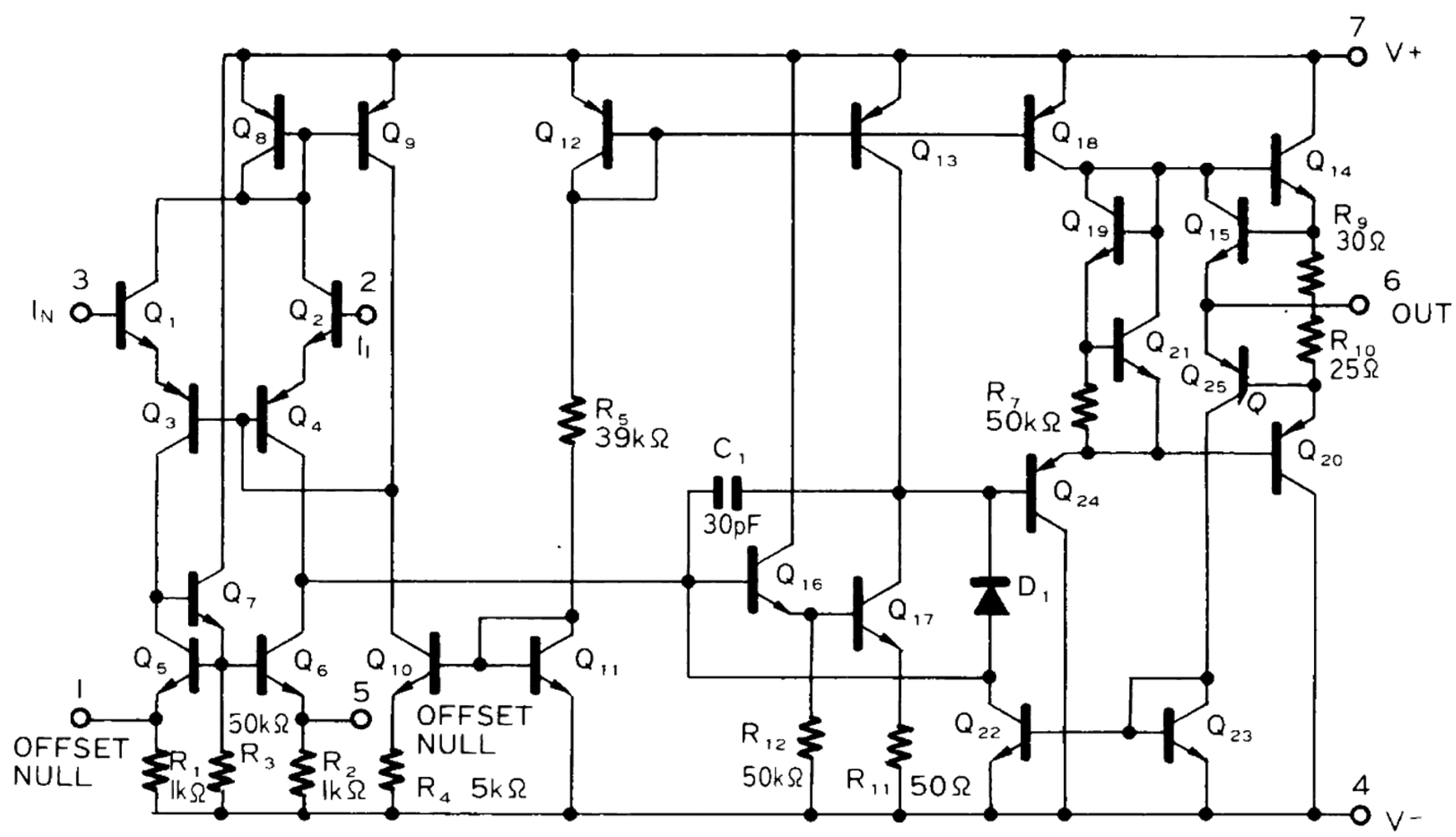

www.hifiengine.com

INTEGRATED CIRCUITS TA7318P

FUNCTION/MANUFACTURER

- Dual Linear-to-Log Converter for Peak Power Indicator/Toshiba

BLOCK DIAGRAM AND CONNECTION INFORMATION

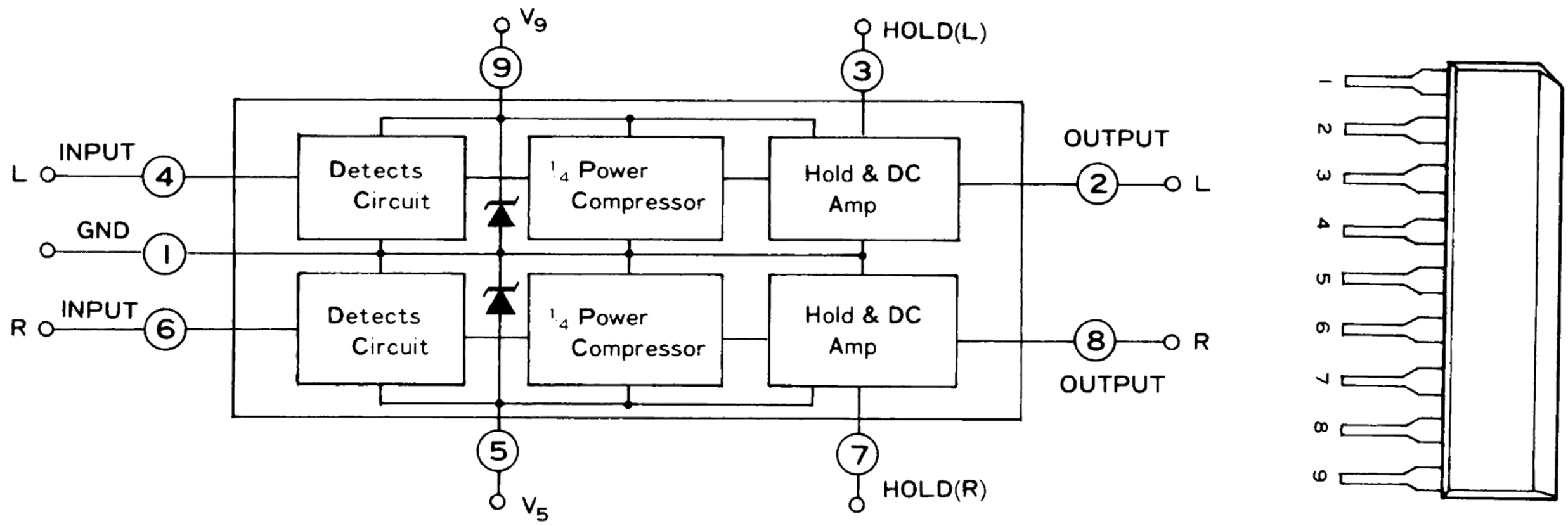

INTEGRATED CIRCUITS UAA180

FUNCTION/MANUFACTURER

- Analog-to-Digital Converter; 12 LED Driver/Siemens

BLOCK DIAGRAM AND CONNECTION INFORMATION

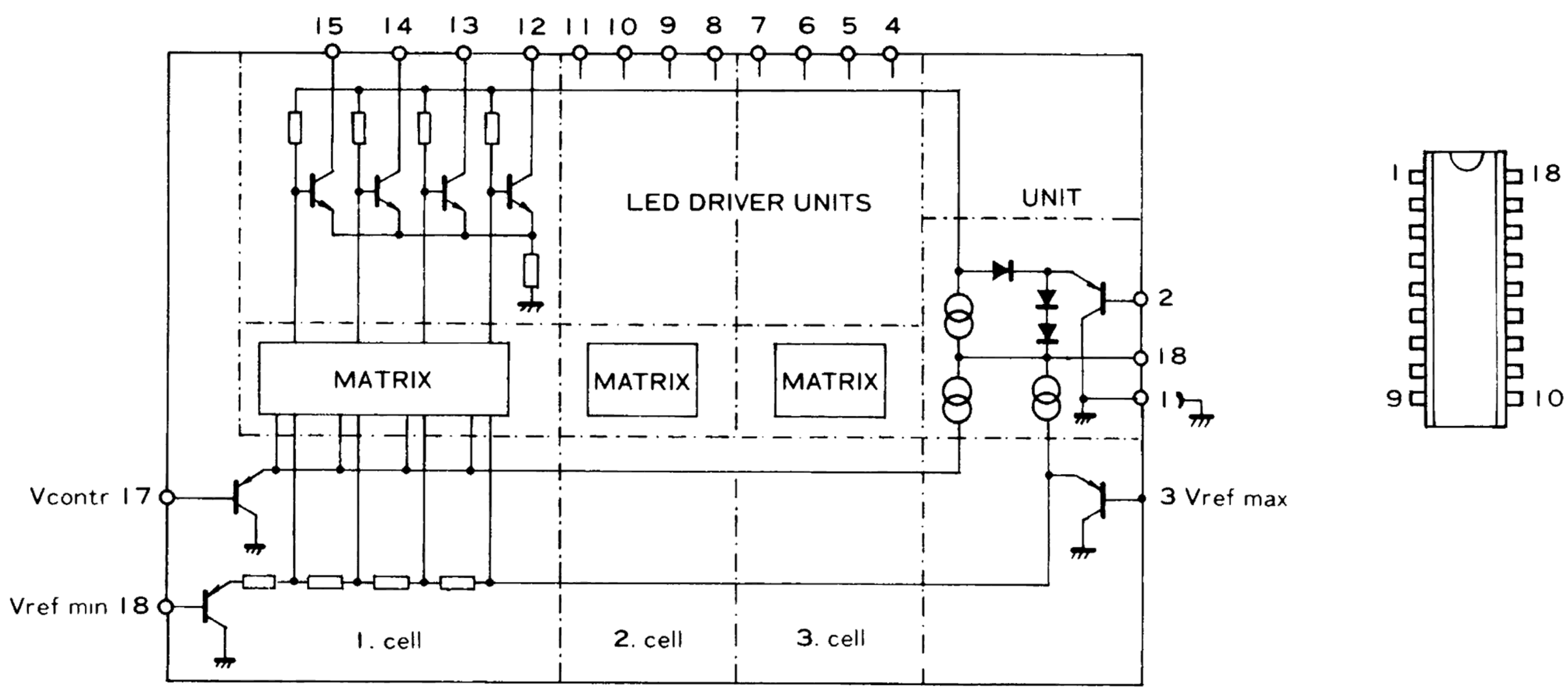

ASTI PACIFIC CORPORATION
1318 Nishijima-cho, Hamamatsu, 430 Japan

ASTI NIKKO TECHNOLOGY CORP. OF AMERICA
HEAD OFFICE 5830 South Triangle Drive, Commerce, Calif. 90040 U.S.A.

965244E 84-1 500 Printed in Japan

www.hifiengine.com