HiFi ENGINE®

For more Hi-Fi manuals and set-up information
please visit www.hifiengine.com

www.hifiengine.com

MITSUBISHI

STEREO PREAMPLIFIER

DA-P10

SERVICE MANUAL

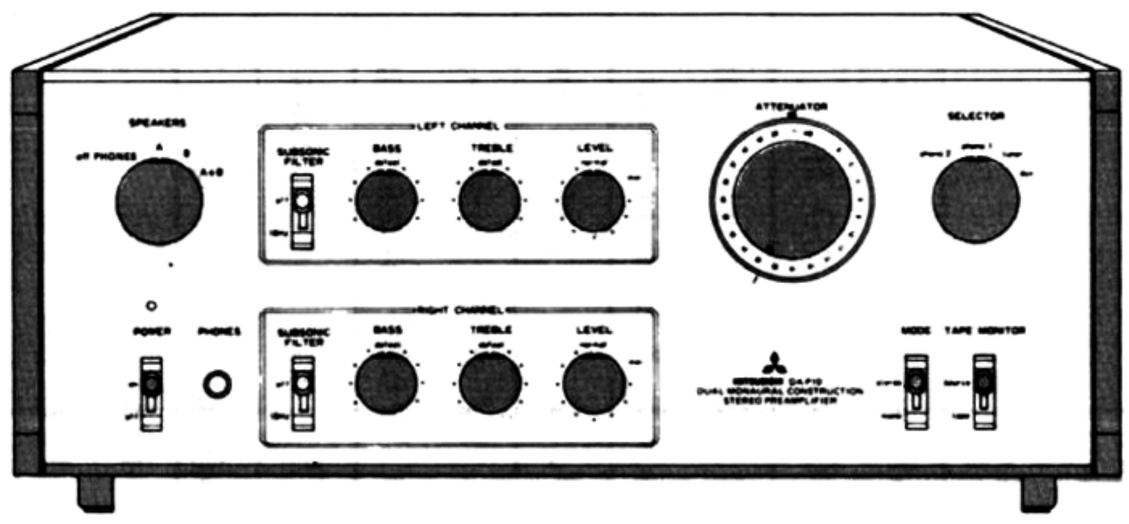

CONTENTS

SERVICE DATA 2
COMPONENTS AND FUNCTIONS..... 4
CONNECTING NOTES..... 6
CONNECTION 7
CHARACTERISTICS 8
PARTIAL DISASSEMBLY..... 9
SERVICING NOTES 11
PRINTED CIRCUIT BOARD 13
WIRING 14
SCHEMATIC DIAGRAM 15
PARTS LIST 16

MITSUBISHI ELECTRIC CORPORATION

www.hifiengine.com

Service Data

Item		Specification	Remarks
Input Sensitivity/ Impedance	PHONO 1	2.2 mV/ 50 Kohms	
	PHONO 2	2.2 mV/ 50 Kohms	
	TUNER	150 mV/ 60 Kohms	
	AUX	150 mV/ 60 Kohms	
	PLAY (Tape Monitor)	150 mV/ 60 Kohms	
Phono Overload Level	PHONO 1	270 mV	THD 0.1 %, 4 KHz
	PHONO 2	270 mV	THD 0.1 %, 4 KHz
Frequency Response	PHONO (RIAA)	30 - 15,000 Hz ± 0.2 dB	RIAA Equalization
	TUNER, AUX, PLAY	10 - 70,000 Hz $^{+0}_{-0.5}$ dB	
Total Harmonic Distortion		0.02 % (rated ouptput)	20 Hz to 20 KHz
		0.05 % (maximum output)	
Intermodulation Distortion		0.02 % (rated output)	60 Hz and 7 KHz, 4:1
Output Level/ Impedance	PRE OUT (50 Kohms)	1 V/ 600 ohms (rated output)	
		9 V/600 ohms (max. output)	
	REC OUT (50 Kohms)	150 mV/ 680 ohms	
	PHONES (8 ohms)	50 mV (PRE OUT 150 mV)	
Equivalent Input Noise Level	PHONO	-126 dB	input short-circuited,
	TUNER, AUX, PLAY	-106 dB	A-network weighted
Signal to Noise Ratio	PHONO	73 dB	input short-circuited,
	TUNER, AUX, PLAY	90 dB	A-network weighted
Channel Separation	PHONO	100 dB (1 KHz)	
		80 dB (20 KHz)	
	TUNER, AUX, PALY	100 dB (1 KHz)	
		85 dB (20 KHz)	

www.hifiengine.com

Tone Control	BASS TREBLE	± 10 dB (100 Hz) ± 10 dB (10 KHz)	
Subsonic Filter		18 Hz, 12 dB/oct.	
Power Consumption		18 W	
Dimensions		16-3/4 (W) x 6-3/4 (H) x 8 (D)"	425 x 170 x 204 m/m
Weight		13 lbs	5.8 kg
Circuits	(1) FET 3, Transistor 34, Diode 16 (2) Dual Monaural Construction		

www.hifiengine.com

COMPONENTS AND FUNCTIONS

Front Panel

SUBSONIC FILTER

The subsonic filter cuts a low band of not more than 18 Hz with 12dB/oct. in each channel. This is used for eliminating only an ultra-low band noise which causes cross modulation distortion when cone paper of the woofer moves back and forth in case of playing a warped record, thus causing no deterioration of sound quality.

LEVEL (Level Control Knob)

When this knob is turned in counter-clockwise direction from 'normal' position, volume in each channel is reduced. Normally, the knob is set to 'normal' position.

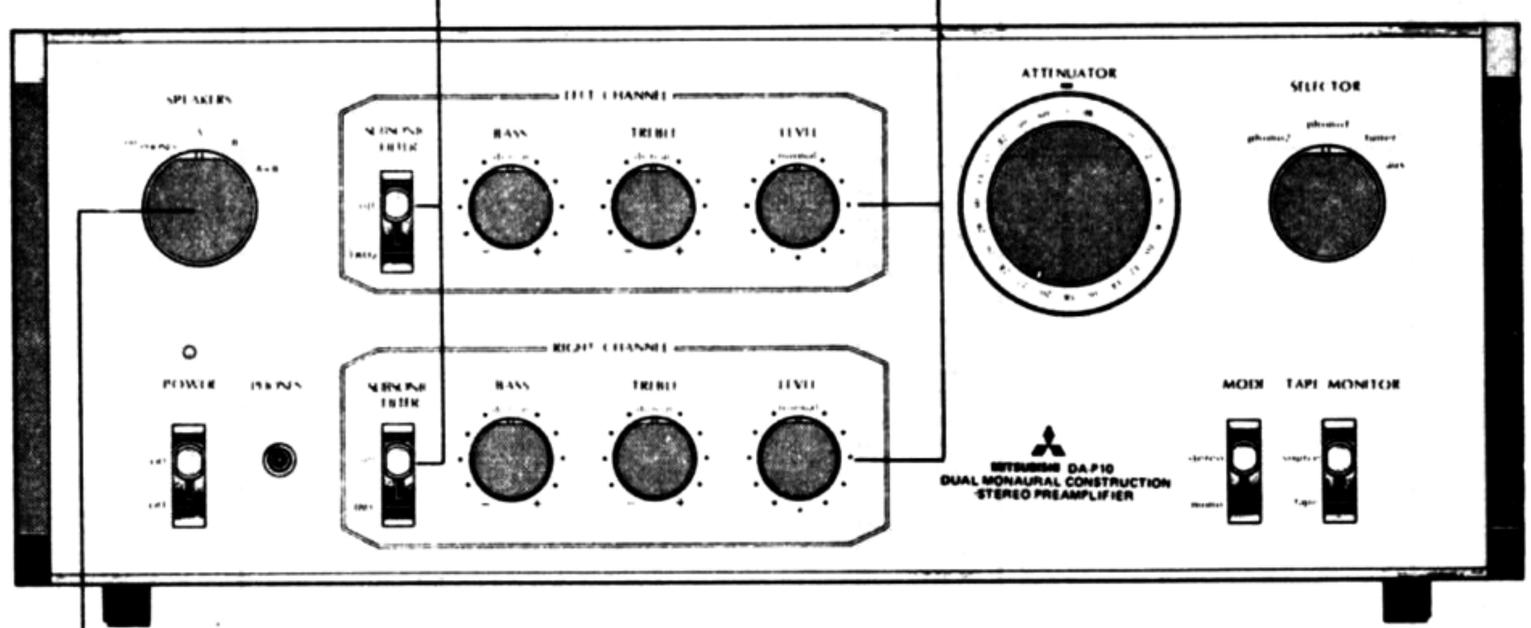

SPEAKERS (Speaker Selector)

When you use Mitsubishi DA-A10 or DA-A15 power amplifier, this selector can choose the required speaker systems connected to the power amplifer, using a speaker control cord provided.

off/PHONES	.....	Headphone listening (Speakers unused)
A	.....	Use of speaker connected to SPEAKERS A terminal of the power amplifier
B	.....	Use of speaker connected to SPEAKERS B terminal of the power amplifier

www.hifiengine.com

Side Panel

RIGHT SIDE

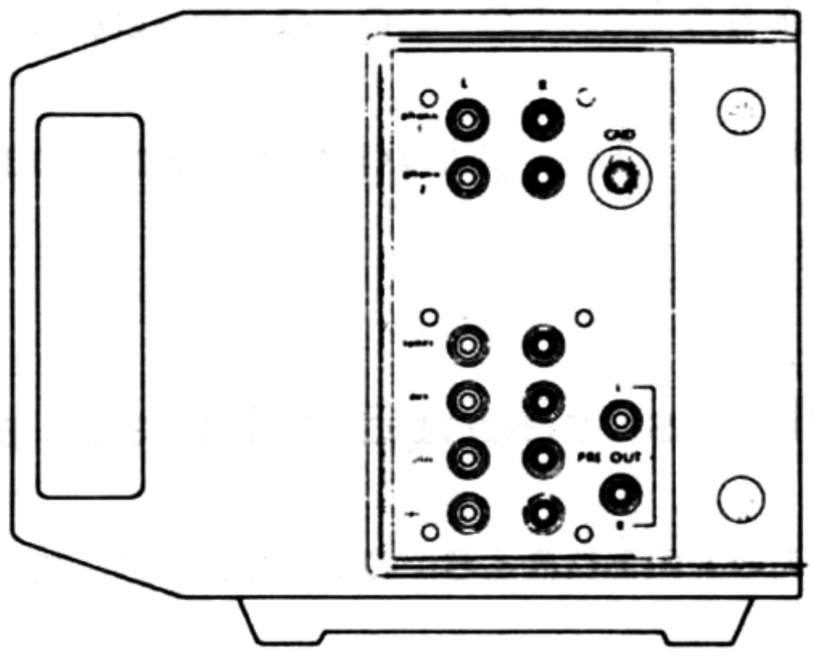

LEFT SIDE

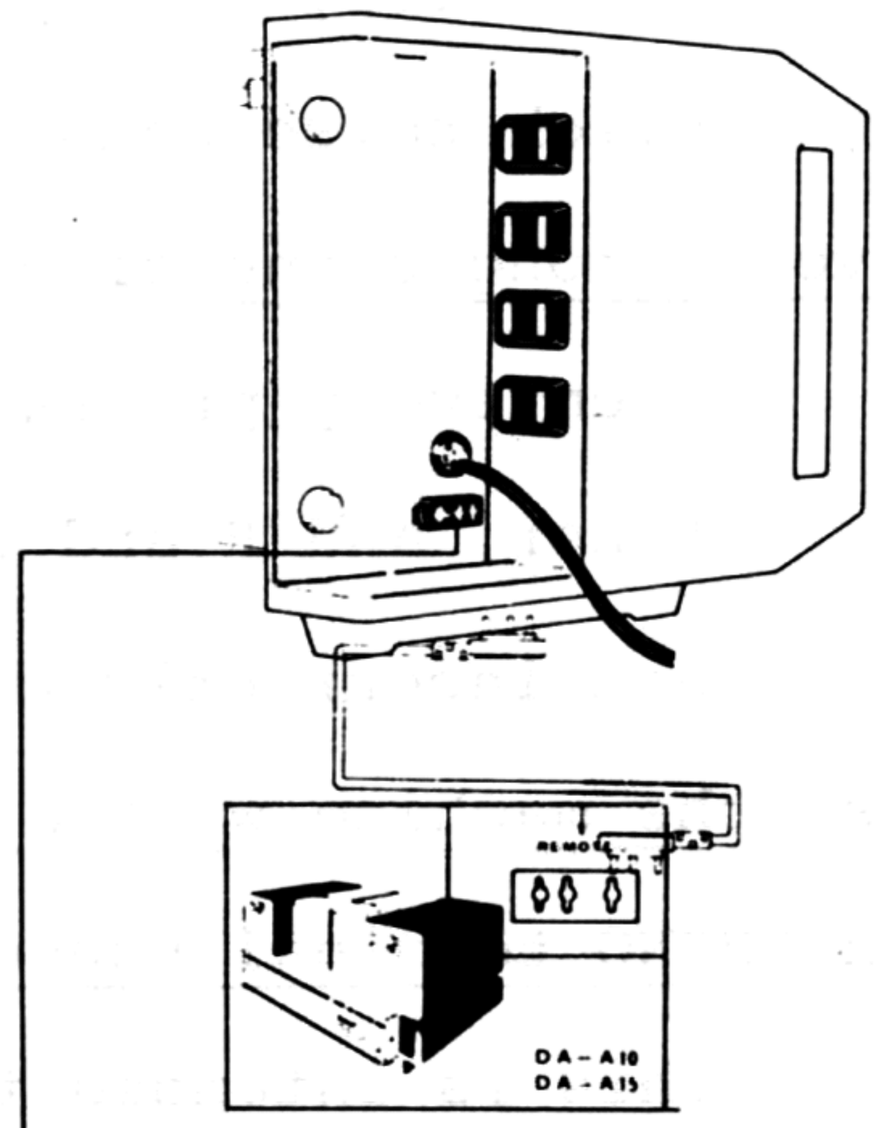

SPEAKER CONTROL (Speaker-Selecting Terminal)

When you use Mitsubishi power amplifier, connect SPEAKER CONTROL to REMOTE terminal of the power amplifier using the speaker control cable provided, thereby speaker selection can be made by this machine.

www.hifiengine.com

CONNECTING NOTES

Before connection, turn off the power supply at all times

Otherwise, the speakers are liable to be damaged by click noise caused when the cord is plugged in or out.

Avoid wrong connection

When every program source such as record player and tuner, and R and L of output terminals of this machine are incorrectly connected, stable sound cannot be produced.

Use the machine with a pin plug for short-circuiting use in PHONO terminal unused.

This is intended to prevent open noise,and click noise caused when the input selector`is switched without connecting a record player.

When you use Mitsubishi DA-A10 or DA-A15 in combination with this machine, power of the power amplifier must be supplied from SWTICHED plug sockets of this machine.

www.hifiengine.com

CONNECTION

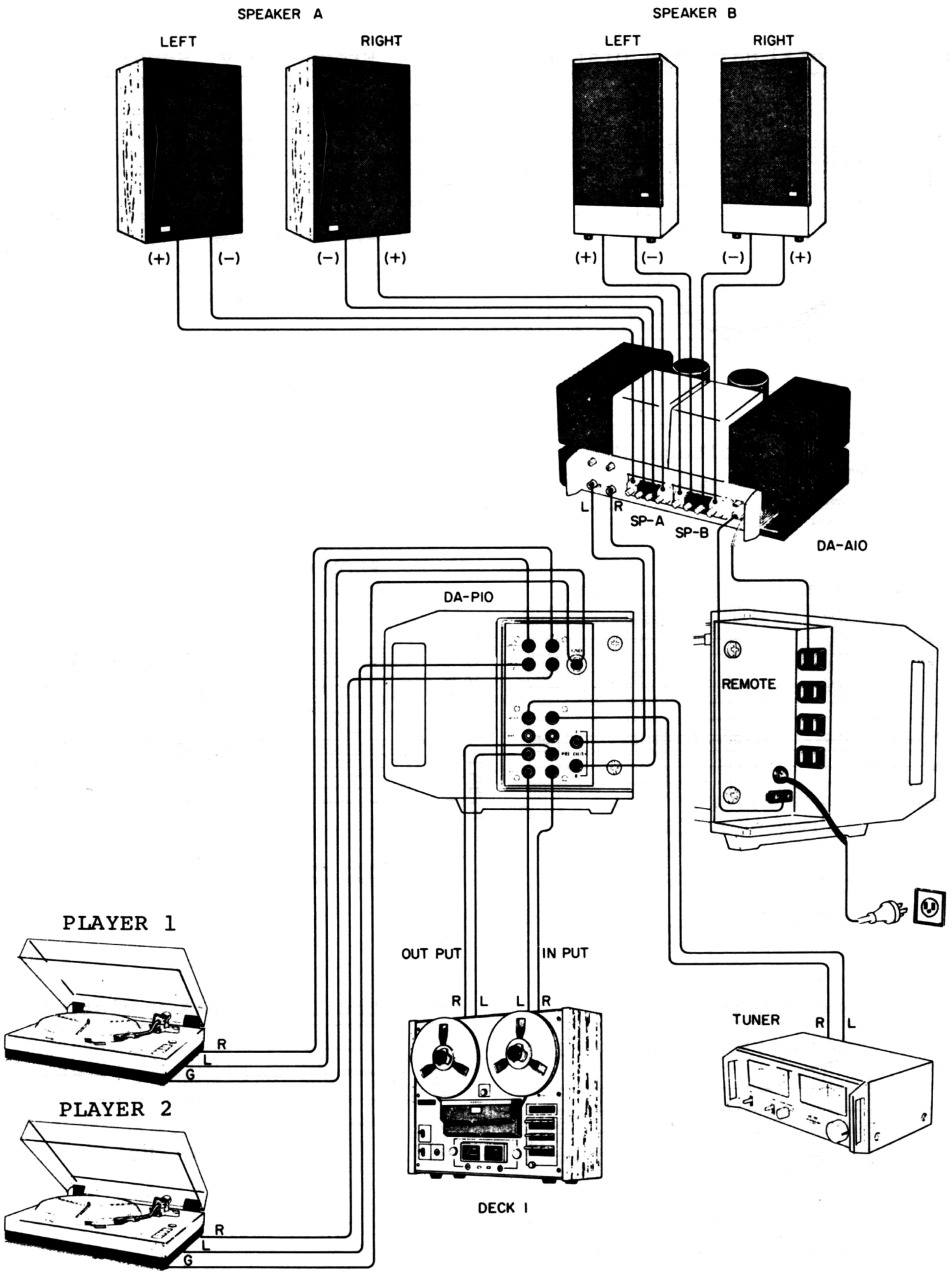

www.hifiengine.com

DA-P10 CHARACTERISTICS

Output V. Total Harmonic Distortion

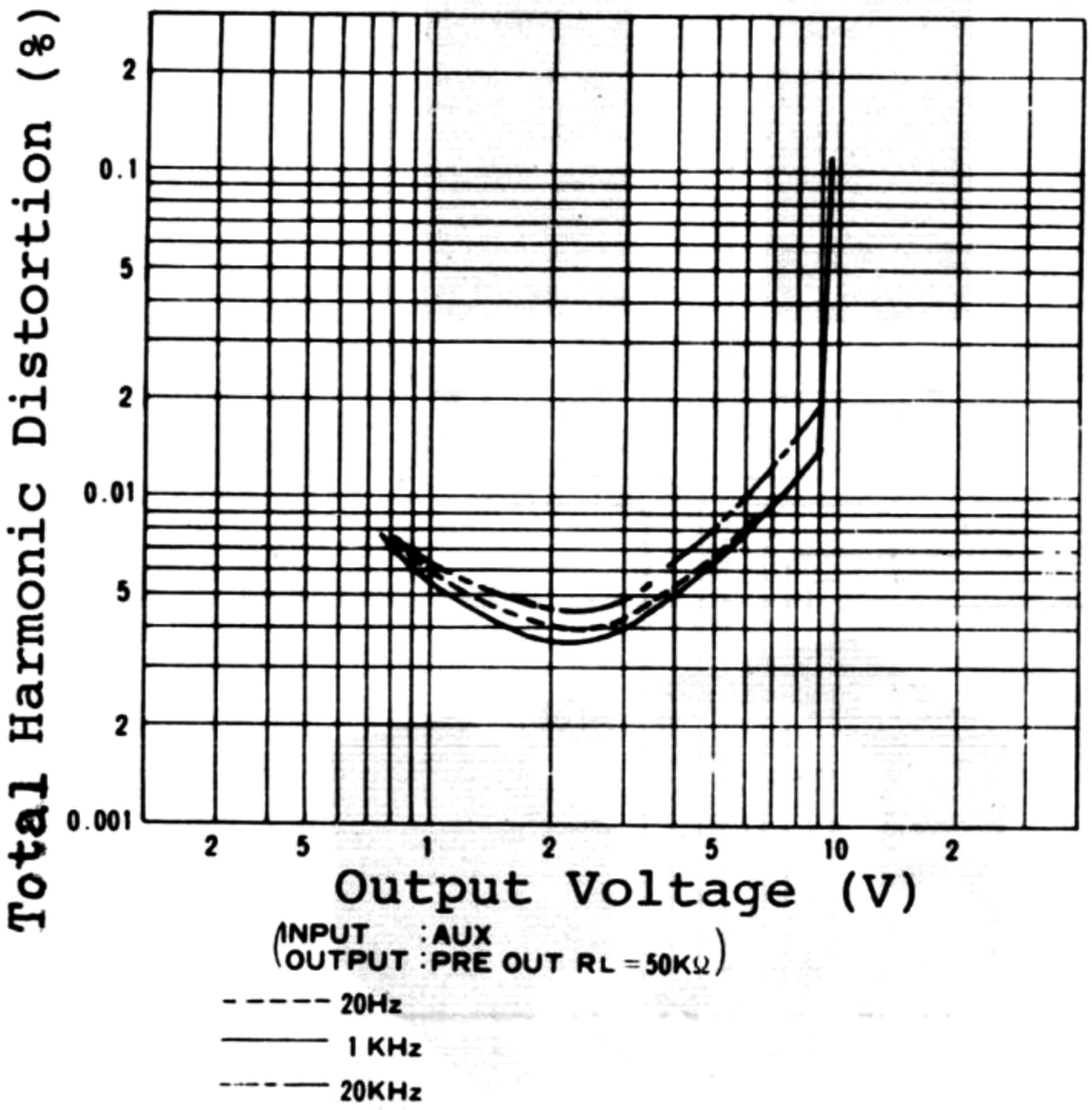

Frequency V. Separation

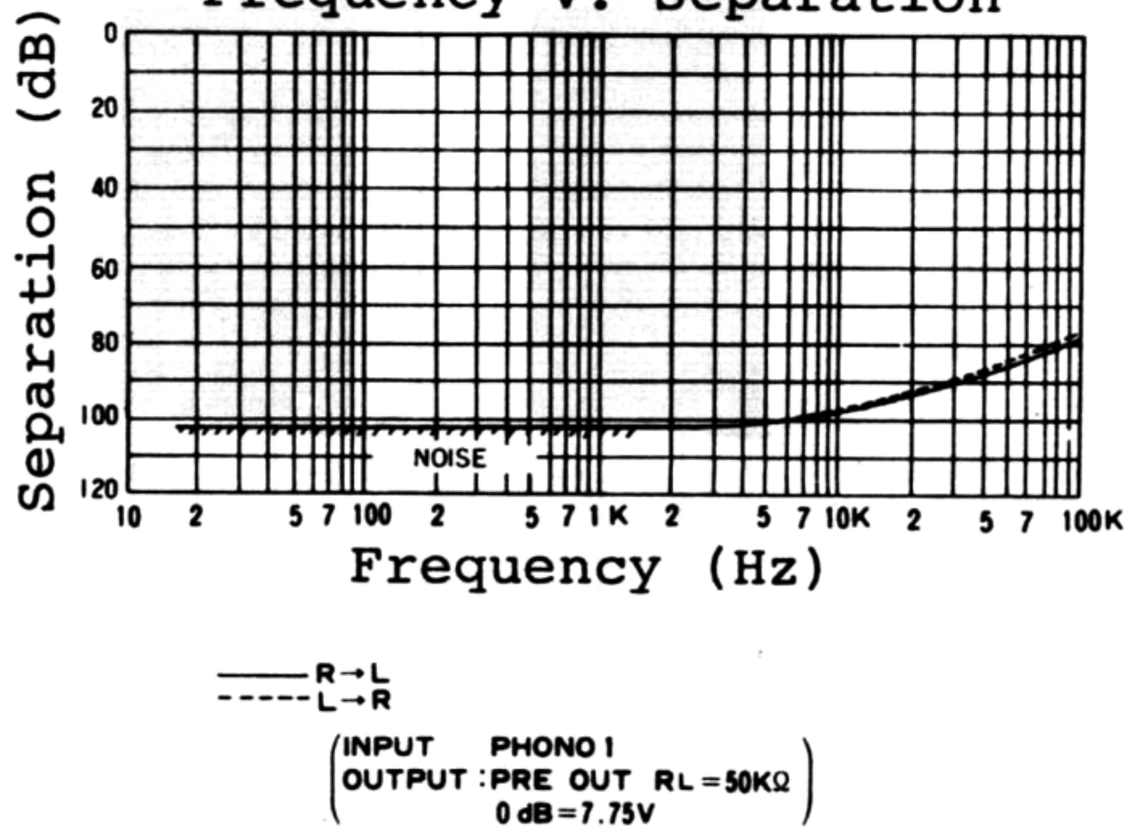

Frequency V. Separation

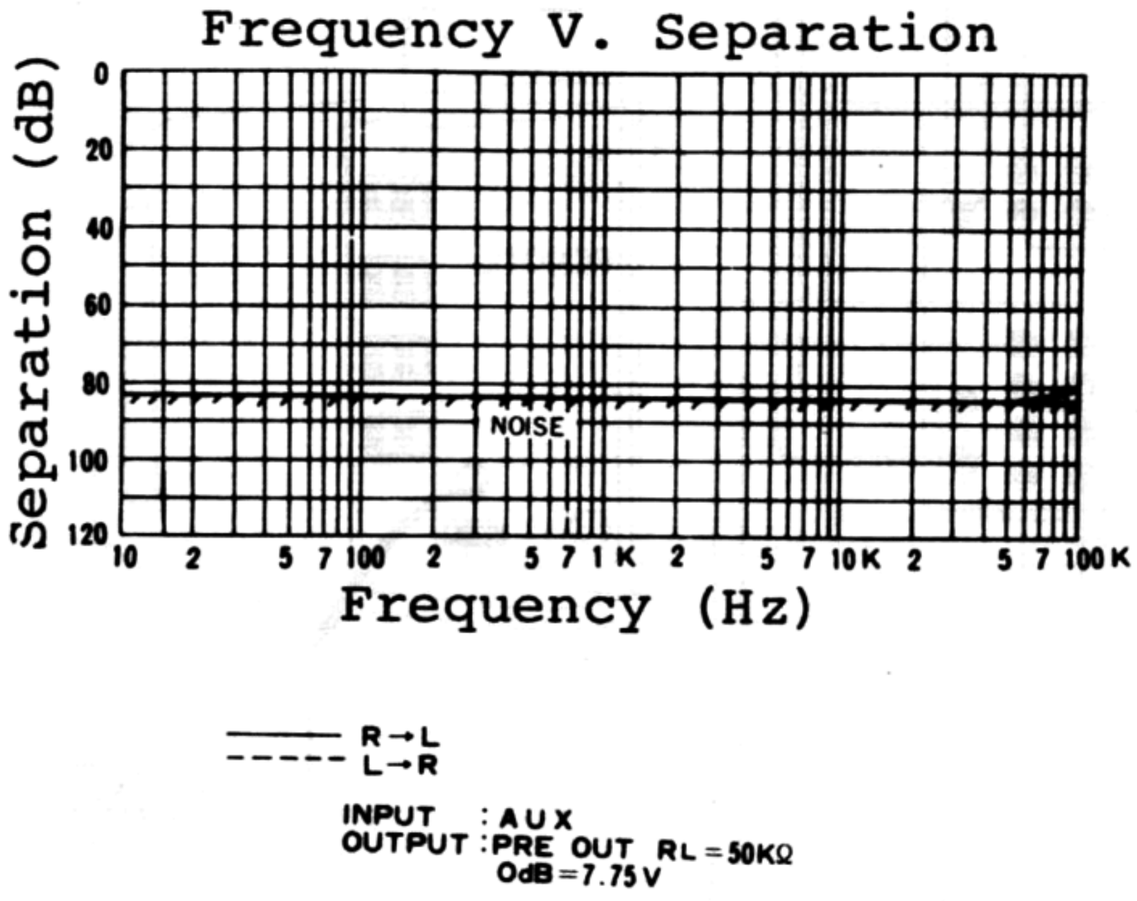

PHONO Input V. Total Harmonic Distortion

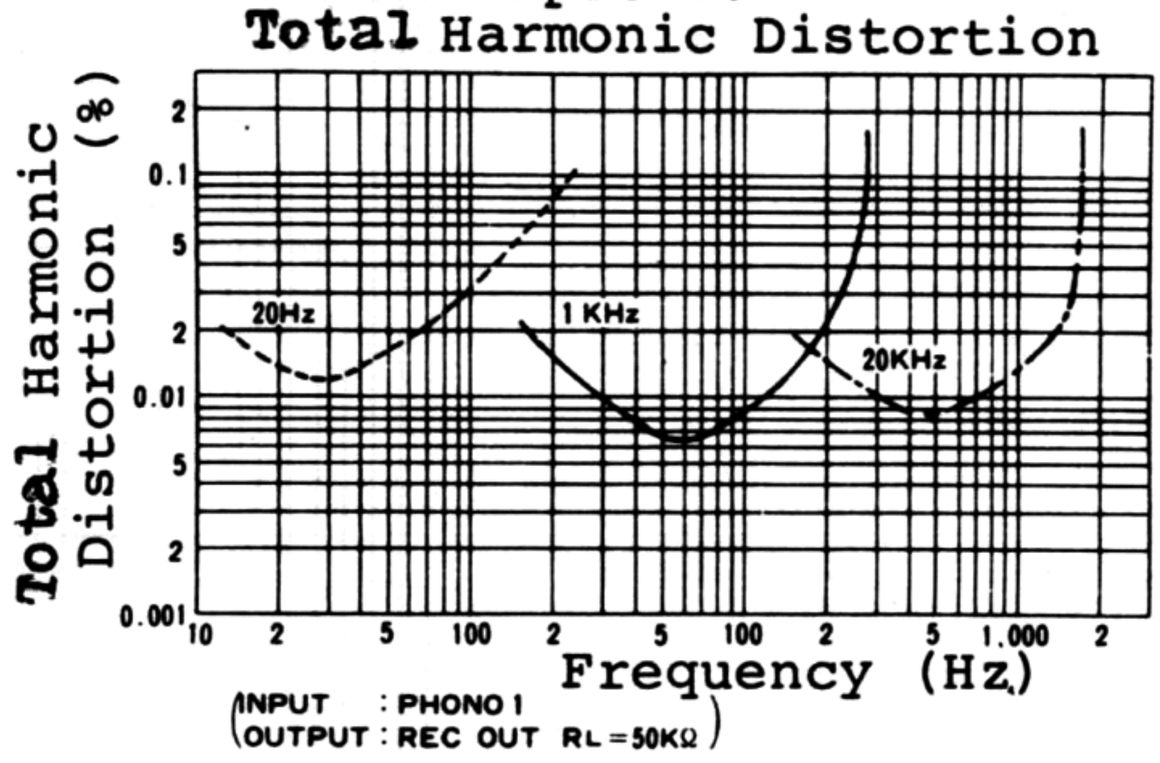

Tone Control Filter

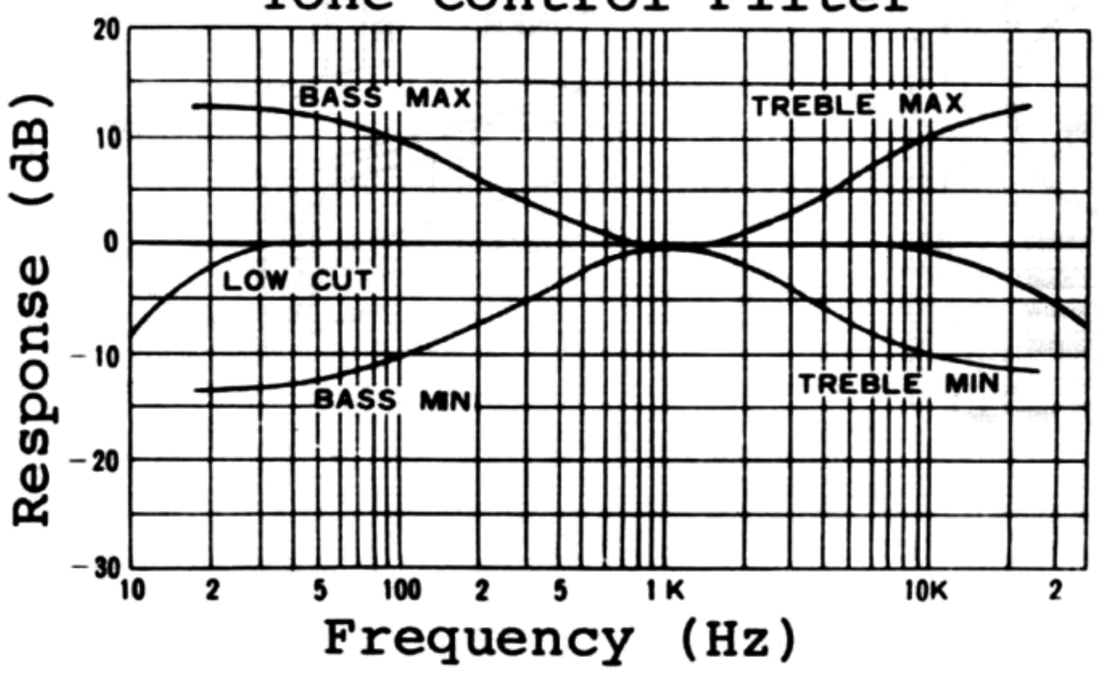

Equalizer RIAA Deviation

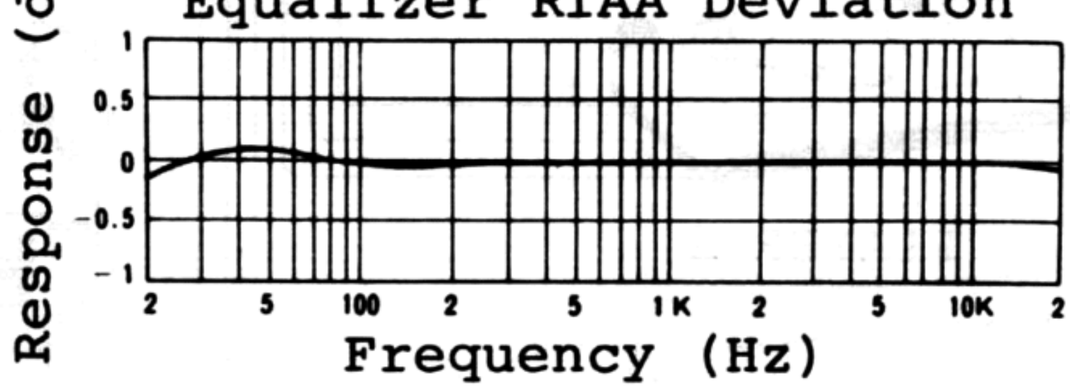

www.hifiengine.com

PARTIAL DISASSEMBLY

1. Top Cover Removal

1) Remove three screws as shown in Fig.1.

2) Withdraw a top cover in arrowed direction by sliding. [Screws: M4 x 14 with dowel, three pieces]

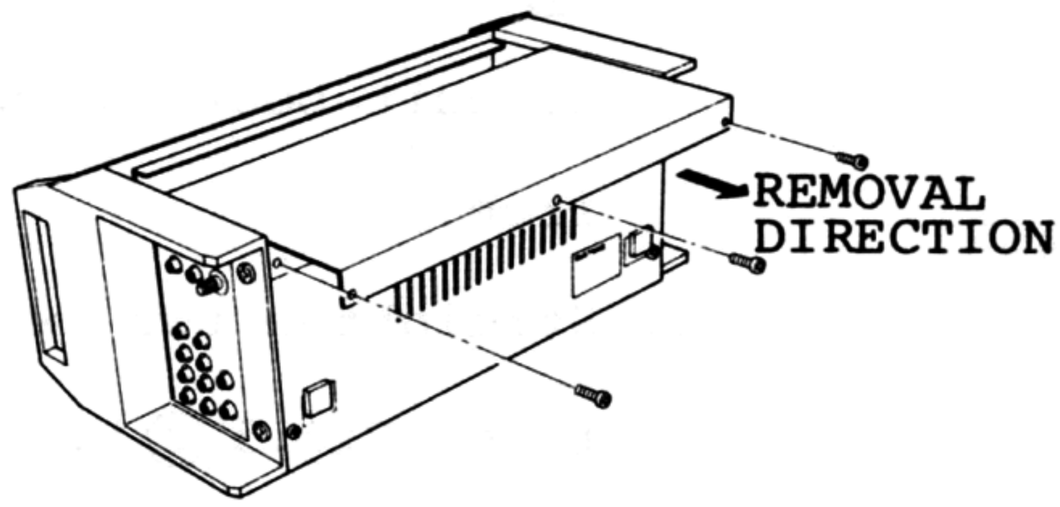

Fig.1

2. Rear Cover Removal

1) Remove the top cover as described in Item 1.

2) Remove 2 screws from the rear and four screws from the bottom as shown in Fig.2. [Screws: M4 x 14, six pieces]

3) Withdraw the L-shaped rear cover in arrowed direction.

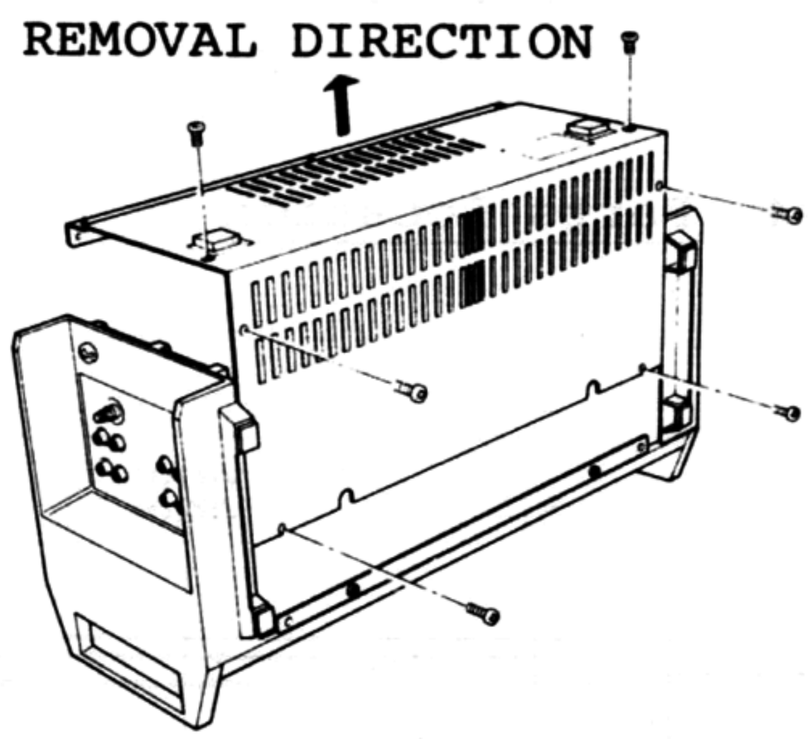

Fig.2

3. Shield Case Removal from Equalizer Printed Circuit Board

1) Remove the top cover and rear cover as described in Items 1 and 2.

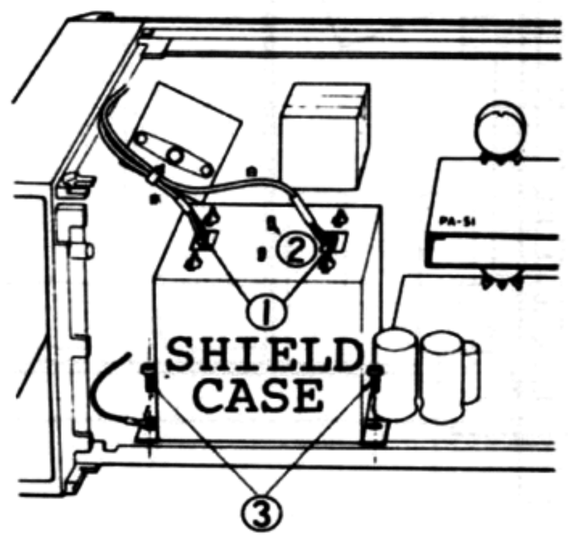

Fig.3

www.hifiengine.com

2) Unsolder two lead wires (Fig.3, ①) from a equalizer's printed circuit board using a soldering iron.

3) Straighten two twisted shield tips (Fig.3,②).

4) Remove two screws (Fig.3, ③).
   [Screws: M3 x 8, two pieces]

5) Lift up the shield case for removal.

4. Parts Location

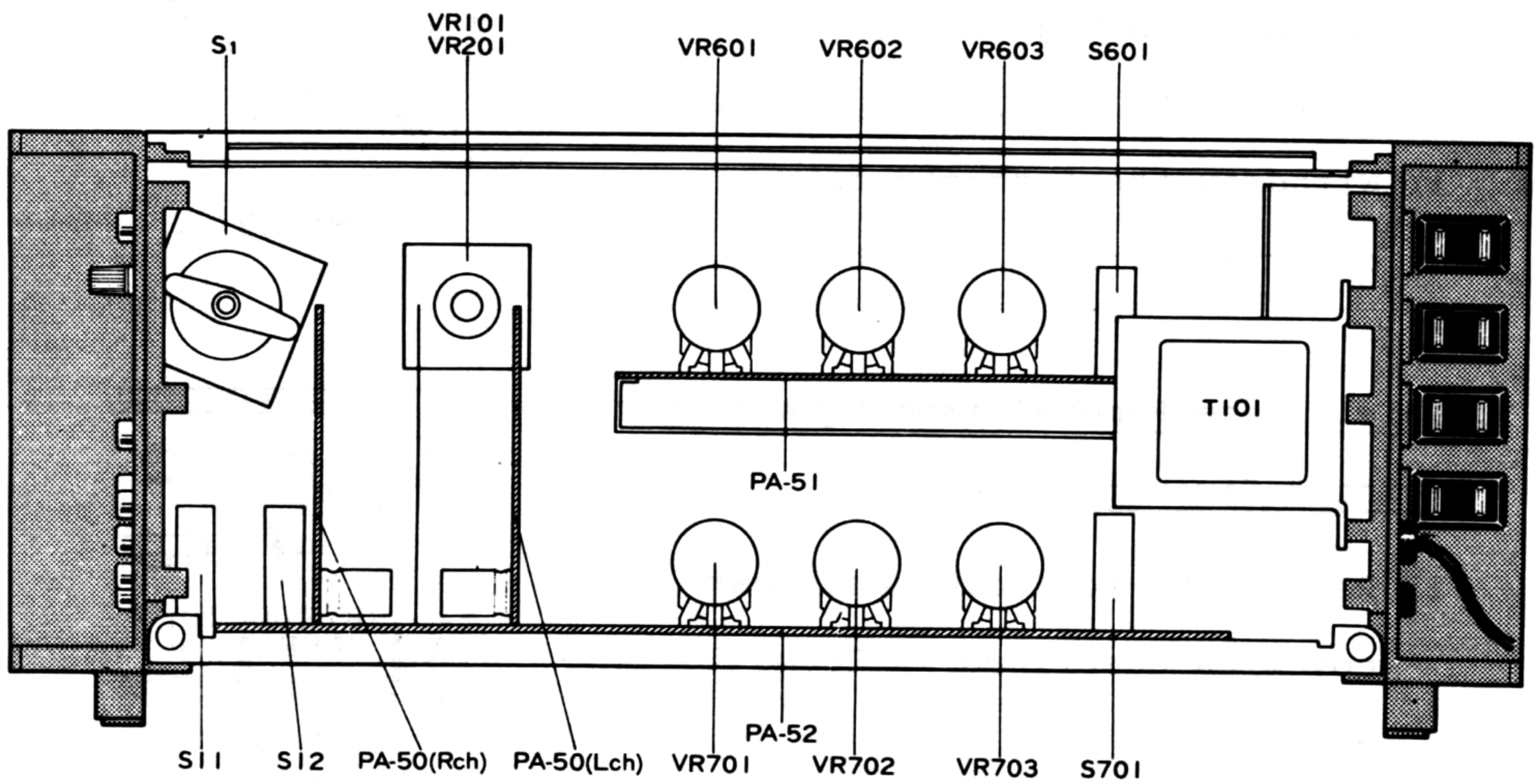

www.hifiengine.com

SERVICING NOTES

Before connection, turn off the power supply at all times

Otherwise, the speakers are liable to be damaged by click noise caused when the cord is plugged in or out.

Avoid wrong connection

When record player, tuner, and R and L of output terminals of this machine are incorrectly connected or short-circuited, stable sound production cannot be achieved.

Correctly make input terminal connection

When pin plug or earth wire of record player output cord is loosely connected or disconnected, hum occurs. Note that the speaker is liable to be damaged when such incorrect connection is not remedied.

Use shielded wire for input terminal connection

Use a shielded wire of not more than 2 m long for connections to record player and tuner. In this case, avoid the use of longer shielded wire which causes deterioration of high band characteristics and easy catching of hum and noise.

Use the machine with a pin plug for short-circuiting use in PHONO terminal unused

This is intended to prevent open noise, and click noise caused when the input selector is switched without connecting a record player.

www.hifiengine.com

When you use Mitsubishi DA-A10 or DA-A15 in combination with this machine, power of the power amplifier must be supplied from SWITCHED plug sockets of this machine.

The speaker control cord provided is used for only Mitsubishi power amplifiers.

www.hifiengine.com

DA - P10 PCB

DA-P10 PA-50(Rch·Lch)

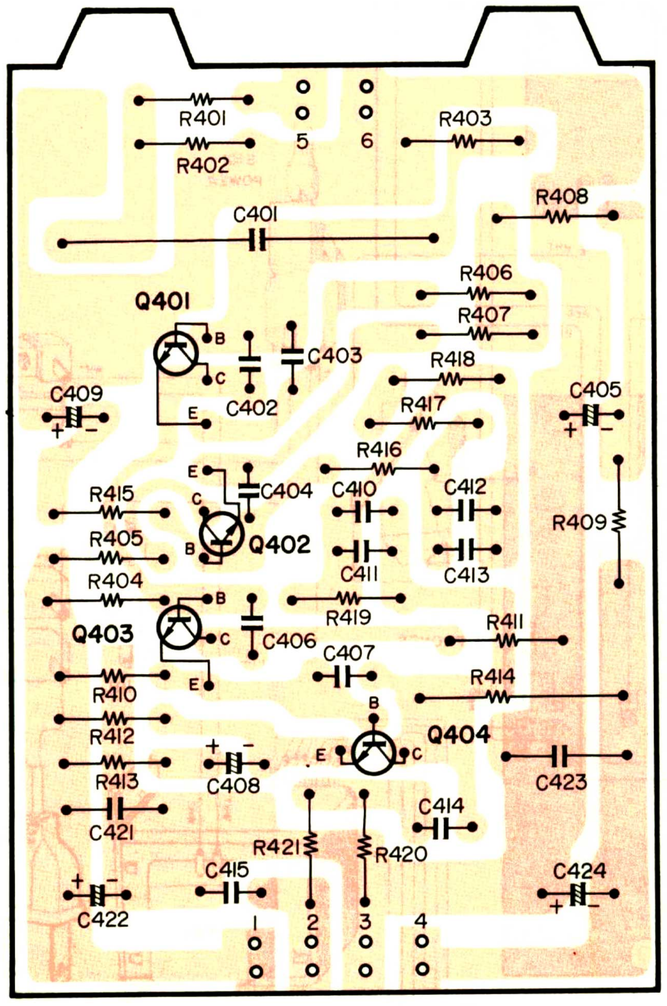

DA-P10 PA-51

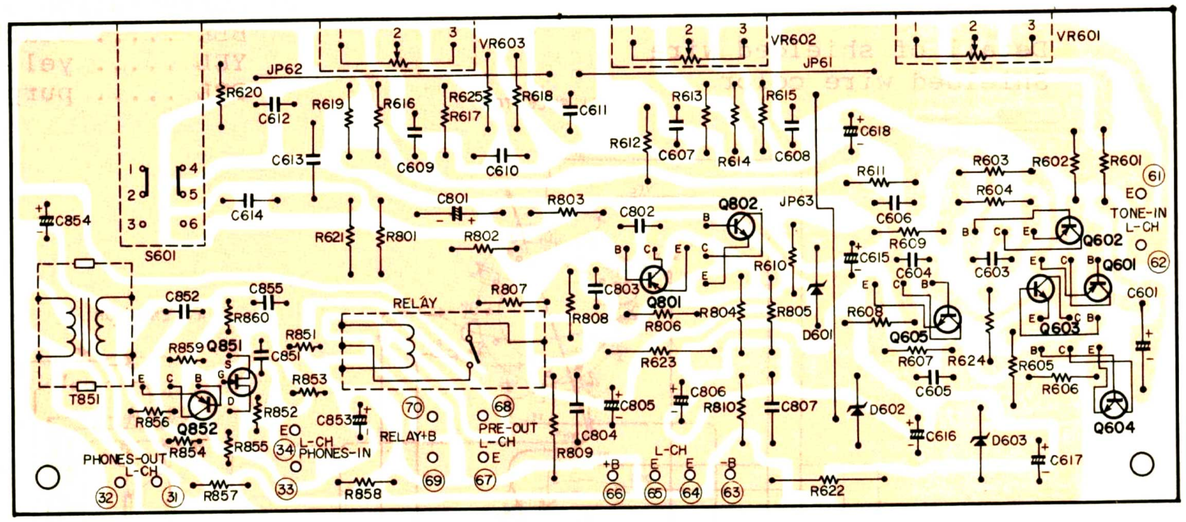

DA-P10 PA-52

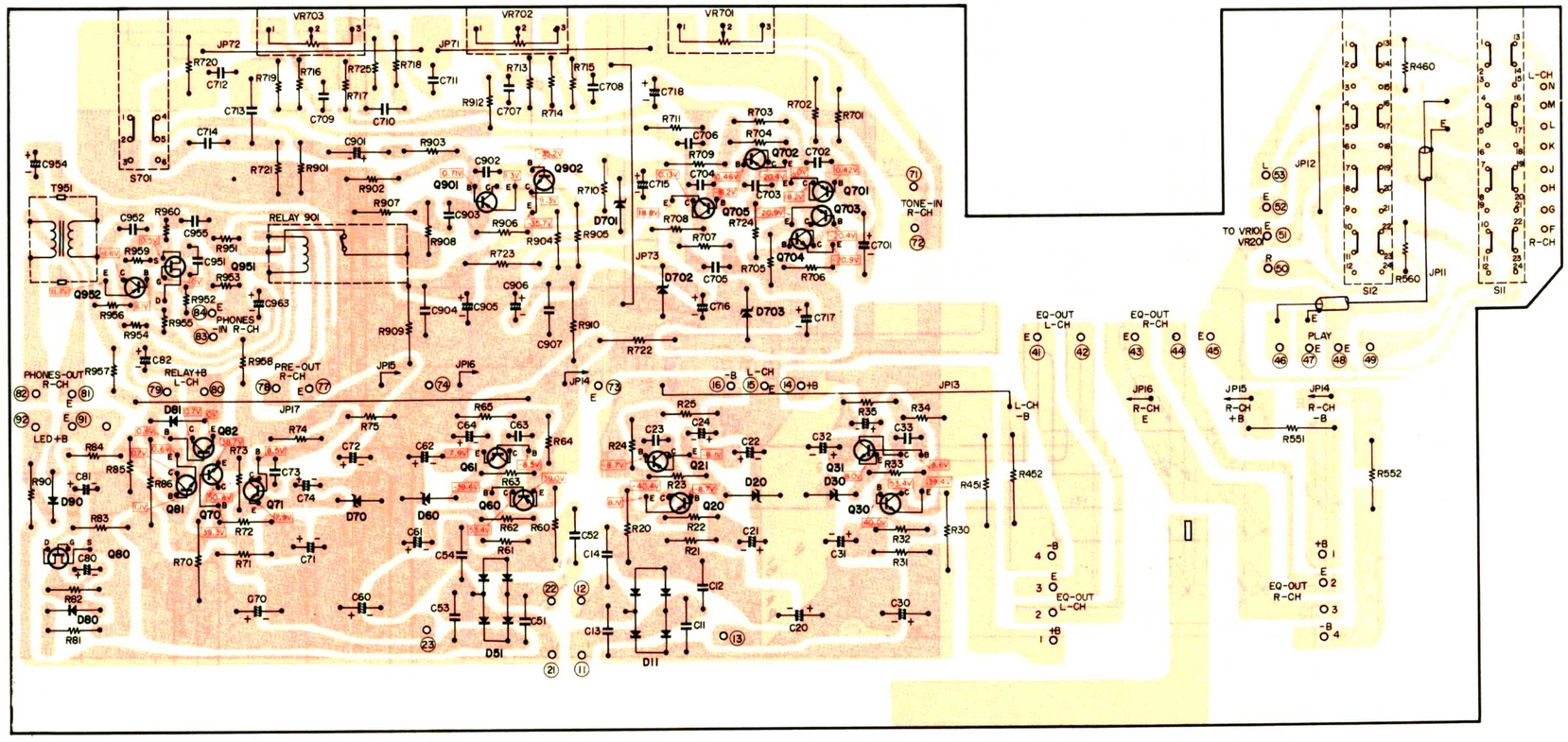

Notes: 1) Be sure that in some cases, these wire colors are different from actual wire colors.

2) Abbreviation of wire colors:

BLK	black	BRN	brown	ORG	orange
YEL	yellow	GRN	green	BLU	blue
PPL	purple	GRY	gray	WHT	white
				RED	red

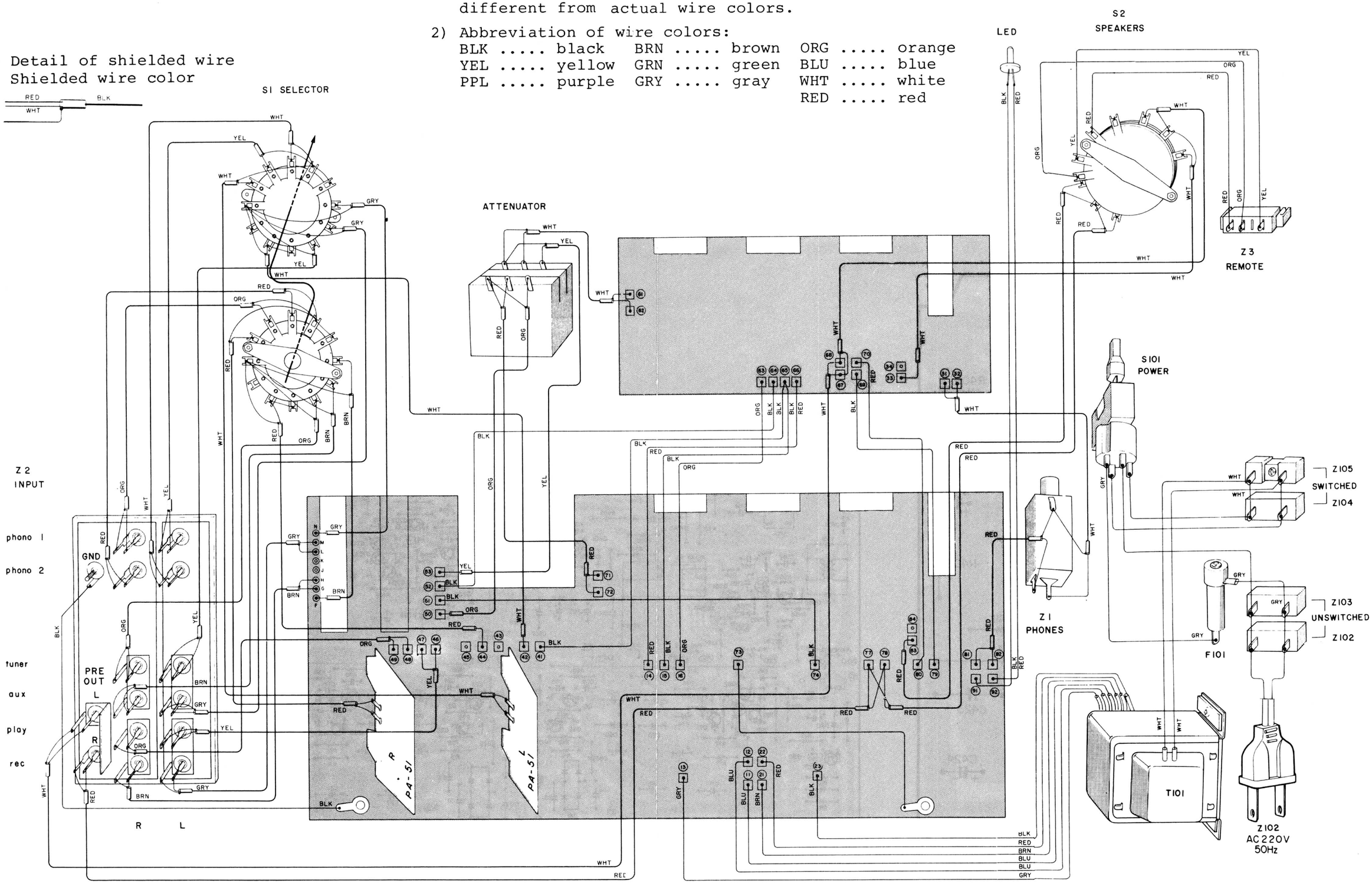

www.hifiengine.com

DA - P10 BASIC SCHEMATIC DIAGRAM

Notes:
1) Unit, resistance ....Ω
   capacitor.....F
2) Unless otherwise specified in circuit diagram, resistance value is 1/4W and capacitor value is 50V.
3) Rated voltage of capacitor is expressed in terms of capacity/rated voltage.
4) R451, R452, R551, R552, R20, R30
5) R60 and R70 indicate fuse resistance.
   NP and LN indicated on capacitors are:
   NP....Non-polarity type capacitor
   LN....low noise type capacitor

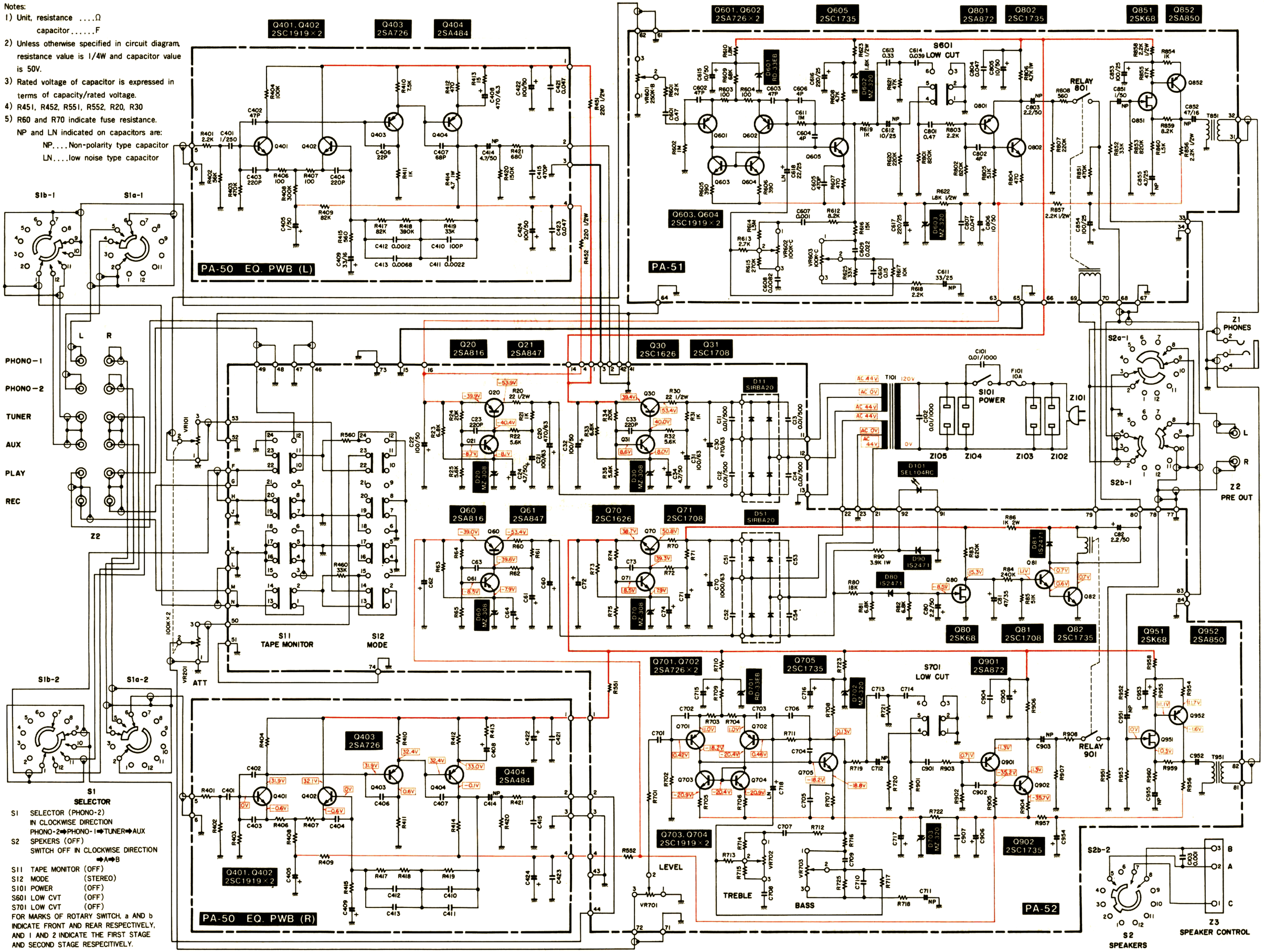

S1 SELECTOR

S1 SELECTOR (PHONO-2)
IN CLOCKWISE DIRECTION
PHONO-2➡PHONO-1➡TUNER➡AUX

S2 SPEKERS (OFF)
SWITCH OFF IN CLOCKWISE DIRECTION
➡A➡B

S11 TAPE MONITOR (OFF)
S12 MODE (STEREO)
S101 POWER (OFF)
S601 LOW CVT (OFF)
S701 LOW CVT (OFF)

FOR MARKS OF ROTARY SWITCH, a AND b INDICATE FRONT AND REAR RESPECTIVELY, AND 1 AND 2 INDICATE THE FIRST STAGE AND SECOND STAGE RESPECITIVELY.

www.hifiengine.com

DA - P10 PARTS LIST

PART NAME	PART NO.	SCHEMATIC DIA. NO.
Socket (Speaker Change)	M07139480	Z3
SW-Lever (POWER)	M07187450	S101
SW-Rotary (SPEAKER)	M07252450	S2
SW-Rotary (SELECTOR)	M07140450	S1
Diode SEL105RC	M07132320	D101
Jack (For Headphone)	M07077476	Z1
VR-W-DT100K25 (ATTENUATOR)	M07140400	VR101, VR201
SW-Lever (MODE • TAPE MONITOR)	M07140451	S11, S12
VR-STD B-250K25 (LEVEL)	M07140401	VR601, VR701
VR-STD C-100K25 (TREBLE)	M07140402	VR602, VR702
VR-STD C-100K25 (BASS)	M07140403	VR603, VR703
SW-Lever	M07139455	S601, S701
Relay	M07140465	RELAY801, RELAY901
Transistor 2SA726	M07071306	Q601, Q602, Q701, Q702
Transistor 2SC1919	M07113311	Q603, Q604, Q703, Q704
Transistor 2SC1735	M07128303	Q82, Q604, Q704
Transistor 2SA872A	M07139303	Q801, Q901
Transistor 2SK68A	M07139304	Q80, Q851, Q951
Transistor 2SA850	M07133304	Q852, Q952
Transistor 2SC1626	M07139305	Q30, Q70
Transistor 2SA816	M07139306	Q20, Q60
Transistor 2SC1708	M07113310	Q31, Q71, Q81
Transistor 2SA847	M07140303	Q21, Q61
Diode RD33EB	M07139320	D601, D701
Diode MZ320	M07138320	D602, D603, D702, D703

www.hifiengine.com

PART NAME	PART NO.	SCHEMATIC DIA. NO.
Diode S1RBA20	M07139321	D11, D51
Diode MZ308	M07133322	D20, D30, D60, D70
Diode 1S2471	M07113321	D80, D81, D90
R-Fuse 1/2W 220-K	M05085473	R451, R452, R551, R552
R-Fuse 1/2W 22-K	M07139411	R20, R30, R60, R70
Knob (SPEAKER, SELECTOR)	M07139210	
Knob (BASS, TREBLE, LEVEL)	M07139211	
Knob (ATTENUATOR)	M07139212	
Knob (POWER, LOW CUT, MODE, TAPE MONITOR)	M07139213	
Screw-Meta with Washer	M07139779	M6 x 16

MITSUBISHI ELECTRIC CORPORATION
HEAD OFFICE MITSUBISHI DENKI BLDG., MARUNOUCHI, TOKYO 100 TELEX J24532 CABLE MELCO TOKYO

SM-7022-IT,FR,SS PRINTED IN JAPAN

www.hifiengine.com