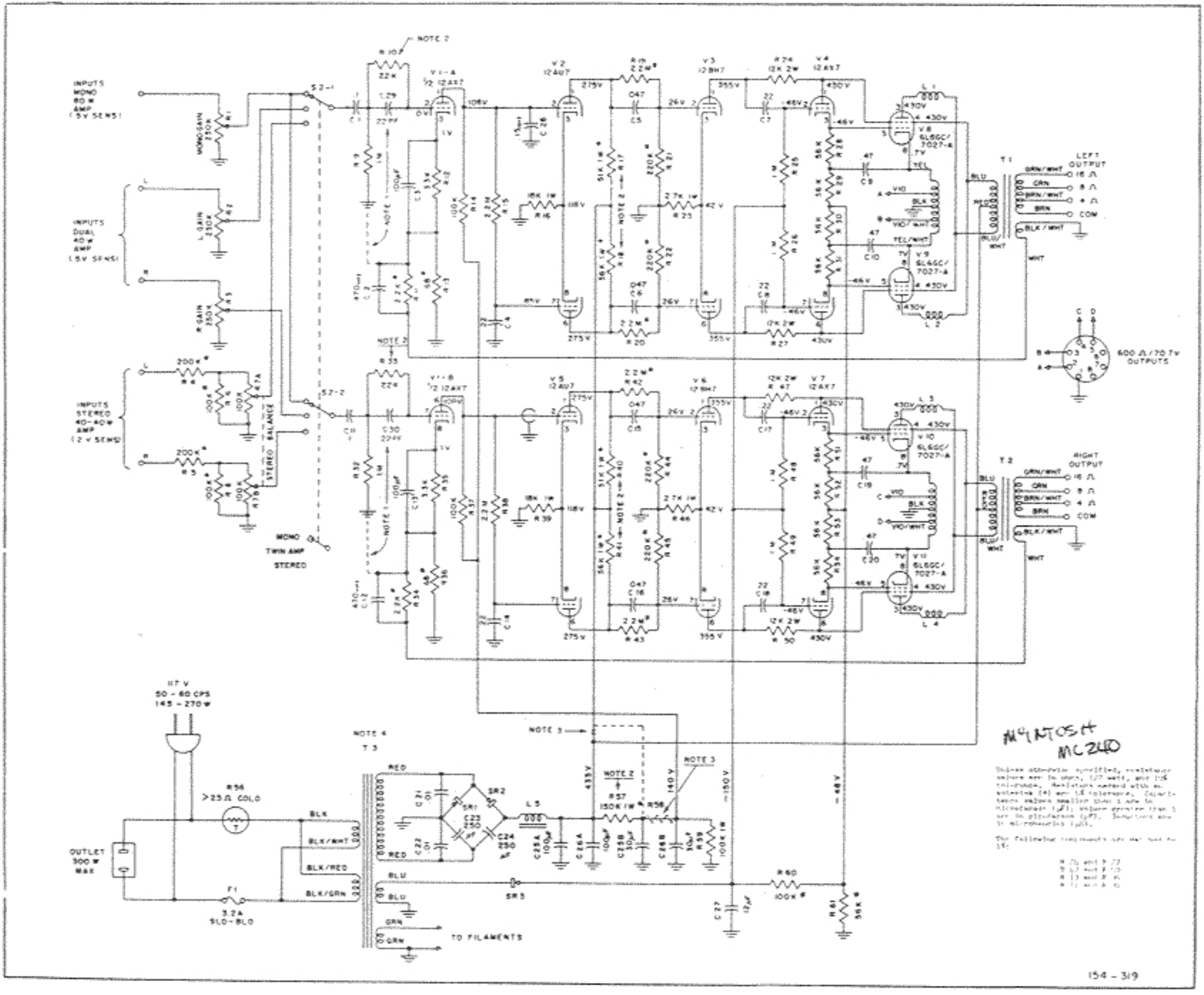
INPUTS MONO 80 W AMP (5 V SENS)
INPUTS DUAL 40 W AMP (5 V SENS)
INPUTS STEREO 40-40 W AMP (2 V SENS)
MONO TWIN AMP STEREO
STEREO BALANCE
LEFT OUTPUT
RIGHT OUTPUT
600 Ω/70.7 V OUTPUTS
117 V 50 - 60 CPS 145 - 270 W
OUTLET 300 W MAX
TO FILAMENTS
NOTE 2
NOTE 3
NOTE 4
MCINTOSH MC240

154 - 319