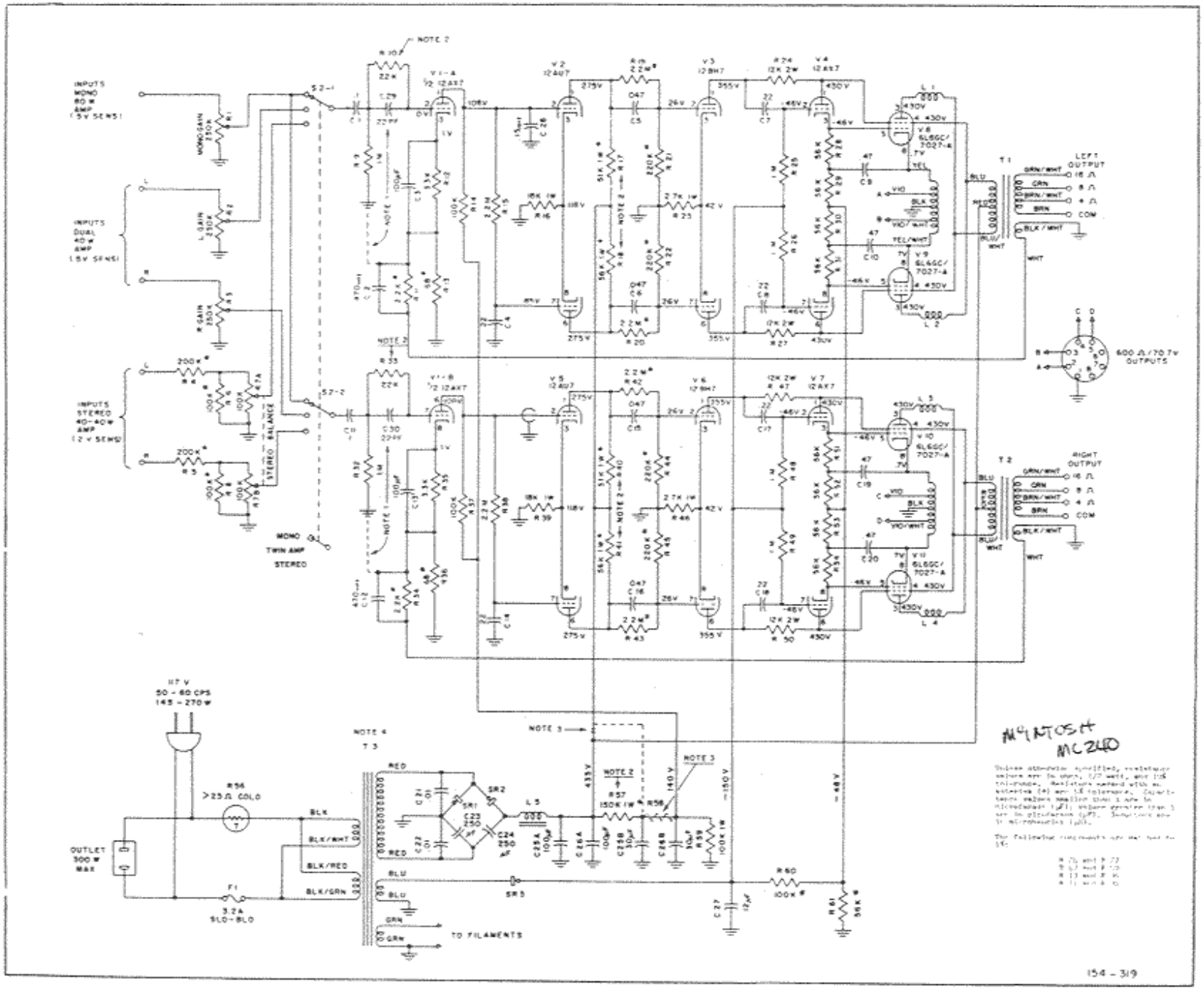
INPUTS MONO 80 W AMP (.5V SENS)
INPUTS DUAL 40 W AMP (.5V SENS)
INPUTS STEREO 40-40 W AMP (.2 V SENS)
MONO GAIN 250K
L GAIN 250K
R GAIN 250K
STEREO BALANCE
MONO
TWIN AMP
STEREO
S2-1
S2-2
NOTE 1
NOTE 2
NOTE 3
NOTE 4
V1-A 1/2 12AX7
V1-B 1/2 12AX7
V2 12AU7
V3 12BH7
V4 12AX7
V5 12AU7
V6 12BH7
V7 12AX7
V8 6L6GC/7027-A
V9 6L6GC/7027-A
V10 6L6GC/7027-A
V11 6L6GC/7027-A
T1
T2
T3
LEFT OUTPUT
RIGHT OUTPUT
600 Ω/70.7v OUTPUTS
117 V 50 - 60 CPS 145 - 270 W
OUTLET 300 W MAX
F1 3.2A SLO-BLO
R56 >25 Ω COLD
SR1
SR2
SR3
L5
TO FILAMENTS
MCINTOSH MC240
154 - 319