marantz®

Service Manual Ver. 2

AV Surround Receiver

NR1508

Click here!

Online service parts list

http://dmedia.dmglobal.com/Document/DocumentDetails/23156

Online Parts List (P5 to P7)

WEB owner's manual

NA: http://manuals.marantz.com/NR1508/NA/EN/index.php

EU: http://manuals.marantz.com/NR1508/EU/EN/index.php

AP: http://manuals.marantz.com/NR1508/AP/ZH/index.php

CAUTION IN SERVICING

ELECTRICAL

MECHANICAL

REPAIR INFORMATION

UPDATING

- For purposes of improvement, specifications and design are subject to change without notice.
- Please use this service manual with referring to the operating instructions without fail.
- Some illustrations using in this service manual are slightly different from the actual set.

Please refer to the MODIFICATION NOTICE.

Confidential

CAUTION IN SERVICING

SAFETY PRECAUTIONS

NOTE FOR SCHEMATIC DIAGRAM

NOTE FOR PARTS LIST

INSTRUCTIONS FOR HANDLING SEMICONDUCTORS AND OPTICAL UNIT

Online Parts List

Accessing the Parts List
Logging in to New SDI and Accessing the Parts List
Accessing the Part List from the Model Asset Screen
PRINTED CIRCUIT BOARDS Parts Table
Downloading the Parts List as an Excel File
Revision History
Searching Part Numbers or Ref. Numbers

CAUTION IN SERVICING.

Initializing This Unit
JIG FOR SERVICING

SAFETY PRECAUTIONS

The following items should be checked for continued protection of the customer and the service technician.

Leakage current check

Before returning the set to the customer, be sure to carry out either (1) a leakage current check or (2) a line to chassis resistance check. If the leakage current exceeds 0.5 milliamps, or if the resistance from chassis to either side of the power cord is less than 460 kohms, the set is defective.
Be sure to test for leakage current with the AC plug in both polarities, in addition, when the set's power is in each state (on, off and standby mode), if applicable.

CAUTION **Please heed the following cautions and instructions during servicing and inspection.**

◎ Heed the cautions!

Cautions which are delicate in particular for servicing are labeled on the cabinets, the parts and the chassis, etc. Be sure to heed these cautions and the cautions described in the handling instructions.

◎ Cautions concerning electric shock!

(1) An AC voltage is impressed on this set, so if you touch internal metal parts when the set is energized, you may get an electric shock. Avoid getting an electric shock, by using an isolating transformer and wearing gloves when servicing while the set is energized, or by unplugging the power cord when replacing parts, for example.
(2) There are high voltage parts inside. Handle with extra care when the set is energized.

◎ Caution concerning disassembly and assembly!

Through great care is taken when parts were manufactured from sheet metal, there may be burrs on the edges of parts. The burrs could cause injury if fingers are moved across them in some rare cases. Wear gloves to protect your hands.

◎ Use only designated parts!

The set's parts have specific safety properties (fire resistance, voltage resistance, etc.). Be sure to use parts which have the same properties for replacement. The burrs have the same properties. In particular, for the important safety parts that are indicated by the ⚠ mark on schematic diagrams and parts lists, be sure to use the designated parts.

◎ Be sure to mount parts and arrange the wires as they were originally placed!

For safety seasons, some parts use tapes, tubes or other insulating materials, and some parts are mounted away from the surface of printed circuit boards. Care is also taken with the positions of the wires by arranging them and using clamps to keep them away from heating and high voltage parts, so be sure to set everything back as it was originally placed.

◎ Make a safety check after servicing!

Check that all screws, parts and wires removed or disconnected when servicing have been put back in their original positions, check that no serviced parts have deteriorate the area around. Then make an insulation check on the external metal connectors and between the blades of the power plug, and otherwise check that safety is ensured.
(Insulation check procedure)
Unplug the power cord from the power outlet, disconnect the antenna, plugs, etc., and on the power. Using a 500V insulation resistance tester, check that the insulation resistance value between the inplug and the externally exposed metal parts (antenna terminal, headphones terminal, input terminal, etc.) is 1M Ω or greater. If it is less, the set must be inspected and repaired.

CAUTION **Concerning important safety parts**

Many of the electric and the structural parts used in the set have special safety properties. In most cases these properties are difficult to distinguish by sight, and the use of replacement parts with higher ratings (rated power and withstand voltage) does not necessarily guarantee that safety performance will be preserved. Parts with safety properties are indicated as shown below on the wiring diagrams and the parts list in this service manual. Be sure to replace them with the parts which have the designated part number.

(1) Schematic diagrams Indicated by the ⚠ mark.
(2) Parts lists Indicated by the ⚠ mark.
The use of parts other than the designated parts could cause electric shocks, fires or other dangerous situations.

NOTE FOR SCHEMATIC DIAGRAM

WARNING:

Parts indicated by the ⚠ mark have critical characteristics. Use ONLY replacement parts recommended by the manufacturer.

CAUTION:

Before returning the set to the customer, be sure to carry out either (1) a leakage current check or (2) a line to chassis resistance check. If the leakage current exceeds 0.5 milliamps, or if the resistance from chassis to either side of the power cord is less than 460 kohms, the set is defective.

WARNING:

DO NOT return the set to the customer unless the problem is identified and remedied.

NOTICE:

ALL RESISTANCE VALUES IN OHM. k=1,000 OHM / M=1,000,000 OHM
ALL CAPACITANCE VALUES ARE EXPRESSED IN MICRO FARAD, UNLESS OTHERWISE INDICATED. P INDICATES MICRO-MICRO FARAD. N INDICATES NANO FARAD. EACH VOLTAGE AND CURRENT ARE MEASURED AT NO SIGNAL INPUT CONDITION. CIRCUIT AND PARTS ARE SUBJECT TO CHANGE WITHOUT PRIOR NOTICE.

NOTE FOR PARTS LIST

1. Parts indicated by "**nsp**" on this table cannot be supplied.
2. When ordering a part, make a clear distinction between "1" and "I" (i) to avoid mis-supplying.
3. A part ordered without specifying its part number can not be supplied.
4. Part indicated by "**@**" mark is not illustrated in the exploded view.

WARNING: Parts indicated by the ⚠ mark have critical characteristics. Use ONLY replacement parts recommended by the manufacturer.

INSTRUCTIONS FOR HANDLING SEMICONDUCTORS AND OPTICAL UNIT

Electrostatic breakdown of the semi-conductors or optical pickup may occur due to a potential difference caused by electrostatic charge during unpacking or repair work.

1. Ground for Human Body

Be sure to wear a grounding band (1 M ohm) that is properly grounded to remove any static electricity that may be charged on the body.

2. Ground for Workbench

Be sure to place a conductive sheet or copper plate with proper grounding (1 M ohm) on the workbench or other surface, where the semi-conductors are to be placed. Because the static electricity charge on clothing will not escape through the body grounding band, be careful to avoid contacting semi-conductors with your clothing

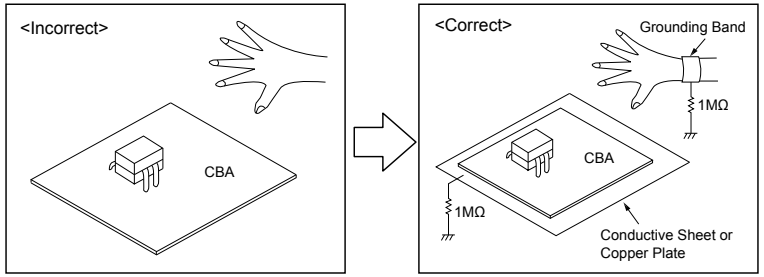

Online Parts List

Accessing the Parts List

(1) Click the URL link on the cover of the service manual.

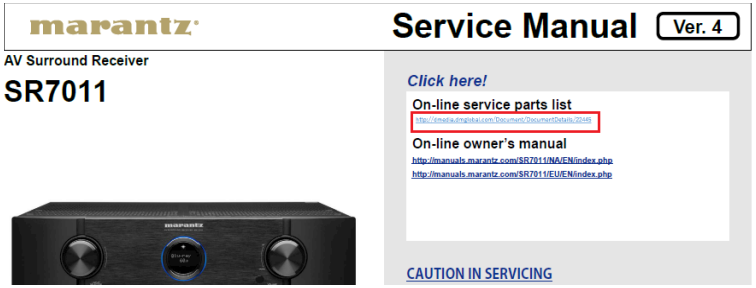

NOTE : If the web browser does not open automatically, copy the URL and paste it into the address bar of the web browser and then press Enter.

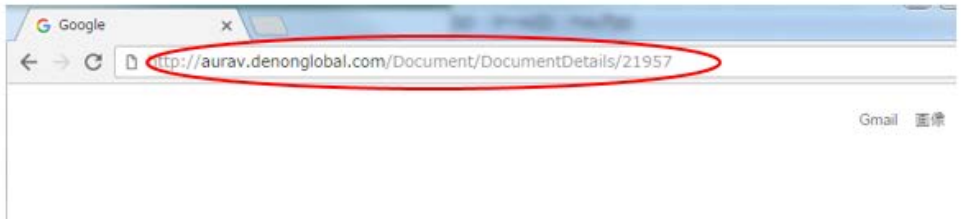

(2) When the login screen is displayed, enter your username and password.
(3) Enter the 5 letters shown as the blue CAPTCHA code as single-byte characters.
If the text is unclear, click "**Refresh**" to change the CAPTCHA code, and enter it again.

(4) Press the "**Login**" button.

Logging in to New SDI and Accessing the Parts List

(1) Access New SDI from the URL below.
<http://dmedia.dmglobal.com>

(2) When the login screen is displayed, enter your username and password.
(3) Enter the 5 letters shown as the blue CAPTCHA code as single-byte characters.
If the text is unclear, click "**Refresh**" to change the CAPTCHA code, and enter it again.

(4) Press the "**Login**" button.
(5) When the Home screen is displayed, click "**Advanced Search**".

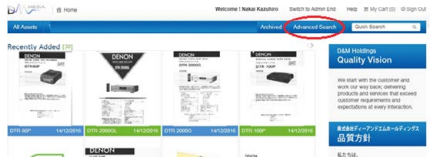

(6) Enter the following search conditions and click "**Search**".
Keyword : Model name Brand : brand name Asset Type : Part list

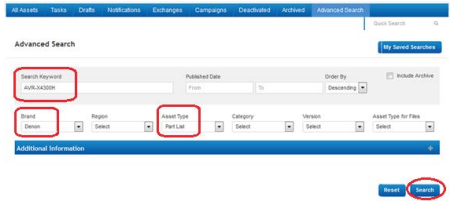

(7) Click the model name when the search results are displayed.

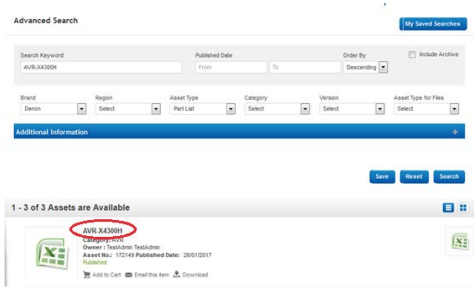

Accessing the Part List from the Model Asset Screen

(1) Display Model Asset from New SDI.
(2) Click the section displayed as ▼ Link to Part Lists under the model name.

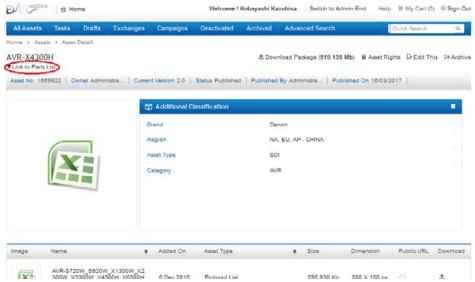

NOTE : If the ▼ Link to Parts List section is not displayed, download the parts table from the Asset list.

Downloading the Parts List as an Excel File

(1) Displays the Parts List. Click the Download icon.

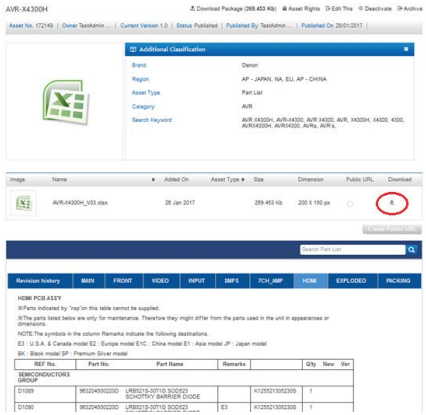

PRINTED CIRCUIT BOARDS Parts Table

(1) Display the Parts List. Click the PCB name in the blue bar to display the parts list for the board.

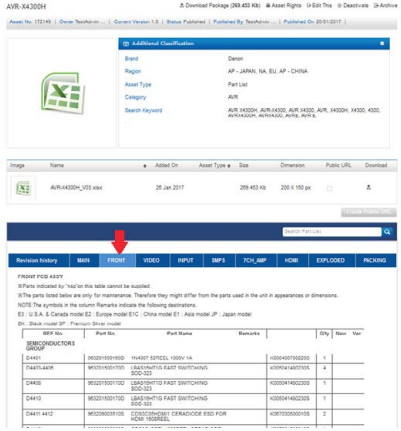

Revision History

(1) Click "**Revision history**" in the blue bar.

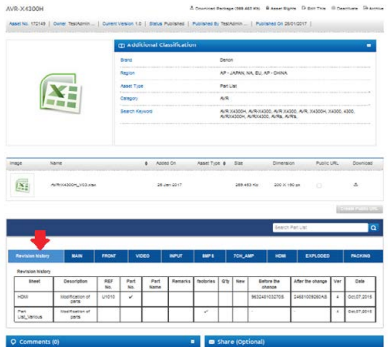

The following details are displayed.

Sheet : Name of the changed sheet
Description : Description of the changes
Remarks : Destination, color information
Factories : Factory number
Ver : Version number after revision if changes were made to the parts list
Date : Date of changes

Searching Part Numbers or Ref. Numbers

You can search a Parts List for part numbers or Ref. numbers.

(1) Enter the part number or Ref. number in the search window of the Parts List, and press the search button.

(2) The search results are displayed.
The name of the sheet in which the search part is used and the part's line are displayed.

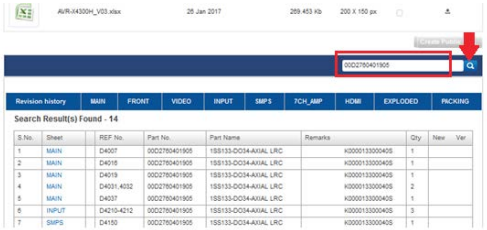

(3) Next, click the "**Sheet**" section of the search results.

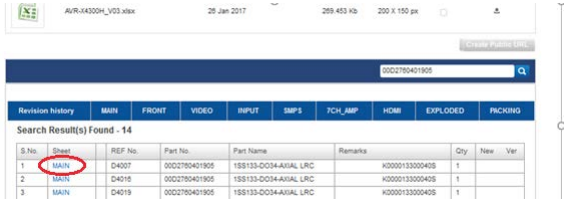

(4) The Board Part Table opens and the line on which the searched part number appears is highlighted.

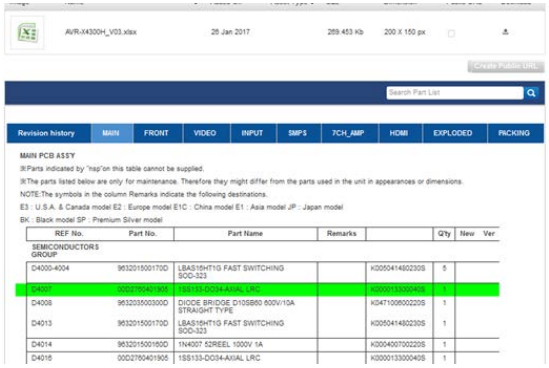

CAUTION IN SERVICING.

Initializing This Unit

Make sure to initialize this unit after replacing the microcomputer or any peripheral equipment, or the digital PCB.

1. Press the power button to turn off the power.
2. While holding down buttons "**TUNER PRESET CH +**" and "**INTERNET RADIO**" simultaneously, press the power button to turn on the power.
3. Release the buttons after confirming that the display flashes at 1-second intervals.
   ＊ The unit is initialized.
   Use network initialization mode to initialize the network related settings.

NOTE：
- If the unit fails to enter the service mode in step 3, repeat the procedure from step 1.
- Initializing the device restores the customized settings to the factory settings. Write down your settings in advance and reconfigure the settings after initialization.

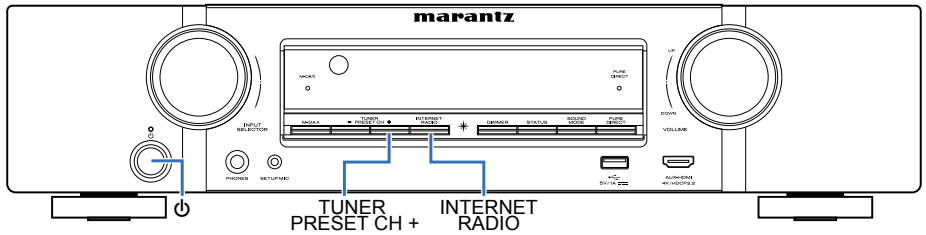

JIG FOR SERVICING

Use the following jigs (extension cable kit) when repairing the PCBs.
Order with your dealer for the jigs your dealer if necessary.

8U-110084S ： EXTENSION UNIT KIT ： 1 Set
(See JIG FOR SERVICING)

ELECTRICAL

SCHEMATIC DIAGRAMS

SCH01_MN864787
SCH02_MN864788
SCH03_ADV7623
SCH04_CPU
SCH05_CPU LEVEL CHG
SCH06_DIGITAL CNT
SCH07_DIR APLD
SCH08_MAIN DAC
SCH09_DSP
SCH10_NET PHY
SCH11_D SUPPLY
SCH12_SPK
SCH13_SIDE_CNT
SCH14_INPUT
SCH15_VIDEO
SCH16_TUNER
SCH17_F_HDMI
SCH18_FRONT
SCH19_AMP1
SCH20_AMP2
SCH21_SMPS
SCH22_REG
SCH23_FRONT CNT

PRINTED CIRCUIT BOARDS

DIGITAL, F HDMI
AV
SPK, SIDE CNT, HDMI GUIDE A, HDMI GUIDE B
AMP, FRONT, MC HP, USB
REG, GUIDE L, FRONT CNT, REG CNT, SMPS

LEVEL DIAGRAM

FRONT ch
CENTER, SURROUND, SURR.BCK ch
SUBWOOFER ch
SURROUND ch
ZONE2(LEGO) ch

BLOCK DIAGRAM

ANALOG AUDIO DIAGRAM
DIGITAL AUDIO DIAGRAM
VIDEO DIAGRAM

POWER DIAGRAM

WIRING DIAGRAM

SEMICONDUCTORS

1. IC's
2. FL DISPLAY

SCH01_MN864787

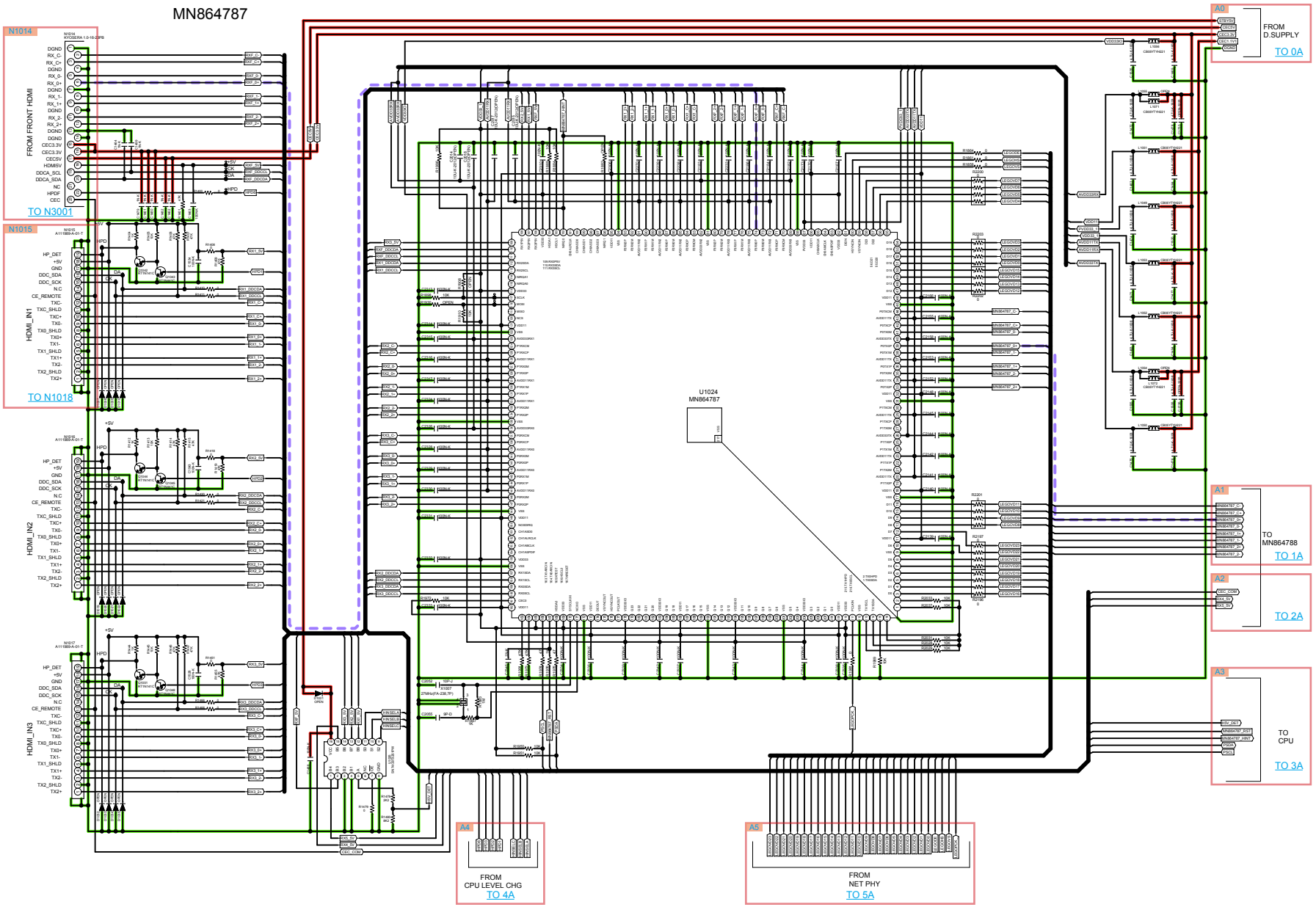

GND LINE | POWER+ LINE | POWER- LINE | ANALOG AUDIO | DIGITAL AUDIO | TMDS SIGNAL | VIDEO SIGNAL | COMPONENT (Y)

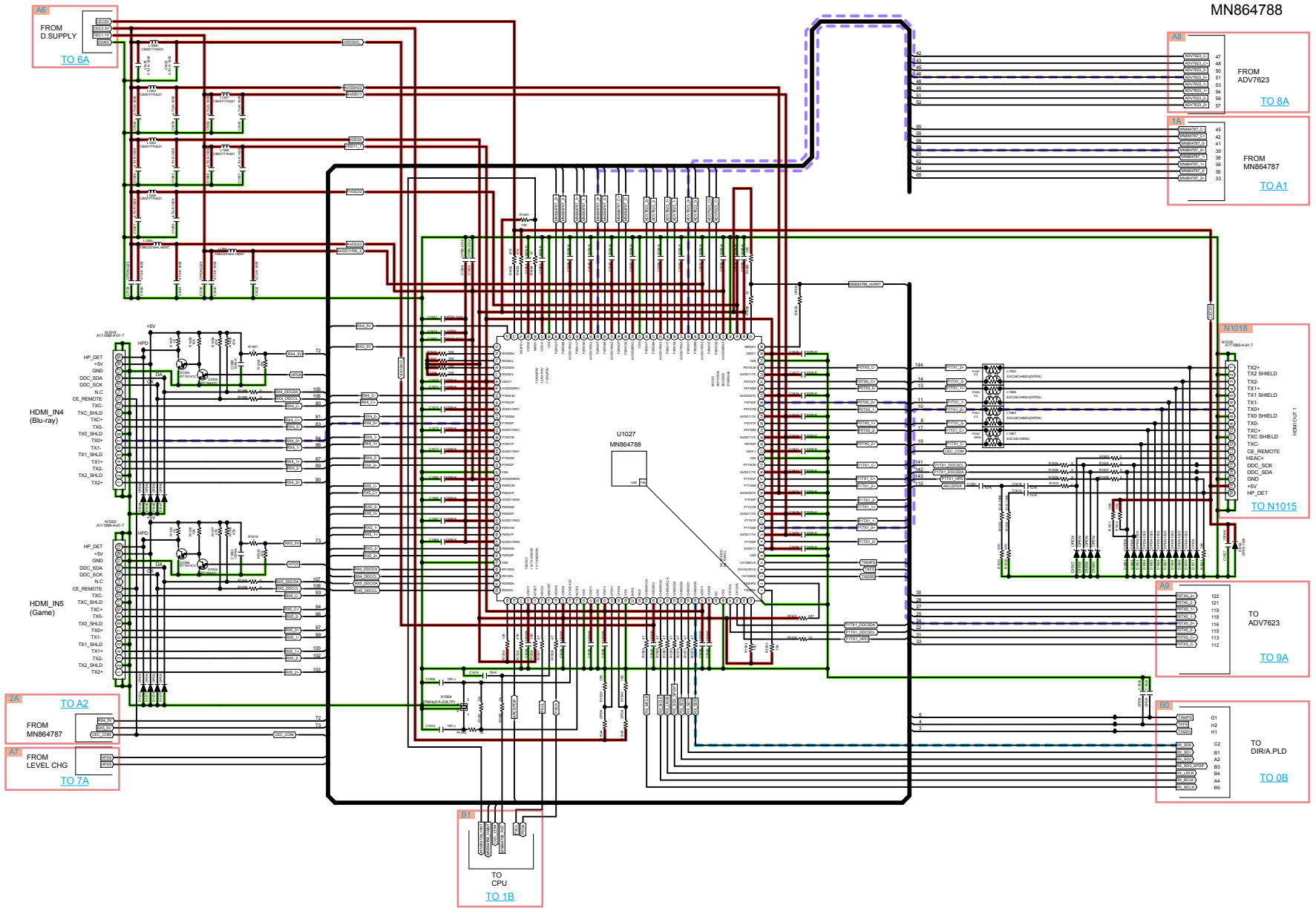

GND LINE POWER+ LINE POWER- LINE ANALOG AUDIO DIGITAL AUDIO TMDS SIGNAL VIDEO SIGNAL COMPONENT (Y)

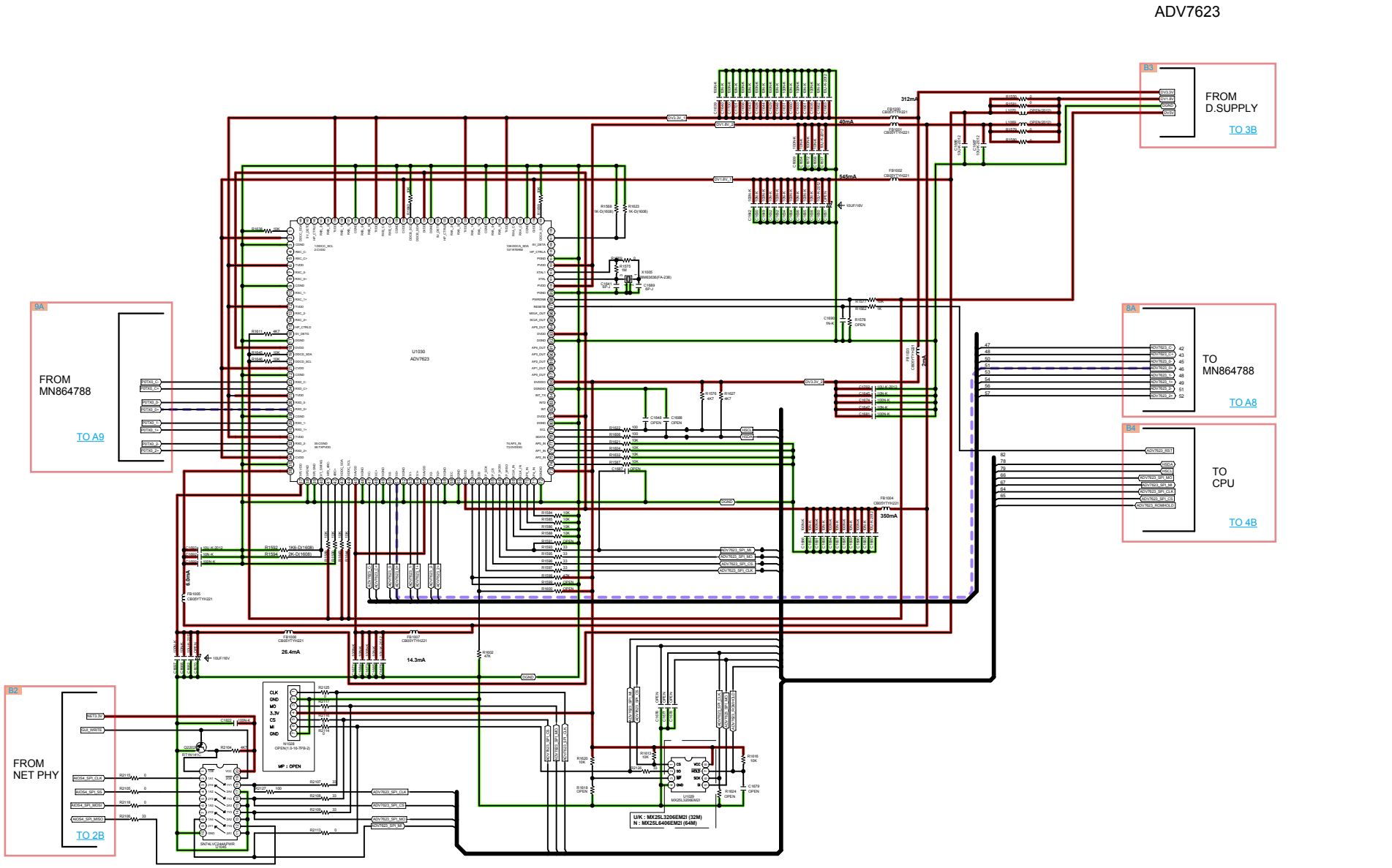

GND LINE | POWER+ LINE | POWER- LINE | ANALOG AUDIO | DIGITAL AUDIO | TMDS SIGNAL | VIDEO SIGNAL | COMPONENT (Y)

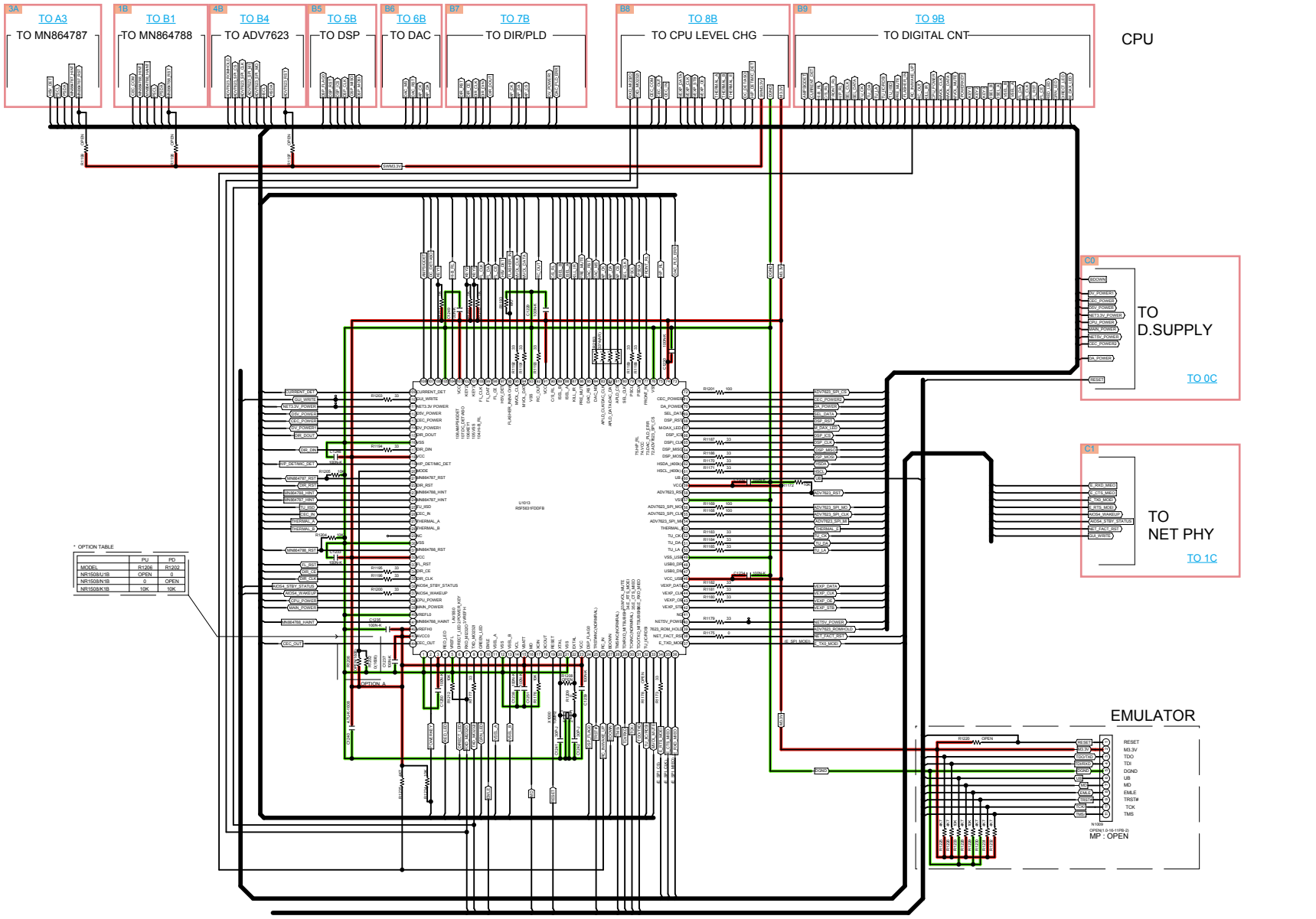

GND LINE POWER+ LINE POWER- LINE ANALOG AUDIO DIGITAL AUDIO TMDS SIGNAL VIDEO SIGNAL COMPONENT (Y)

SCH05_CPU LEVEL CHG

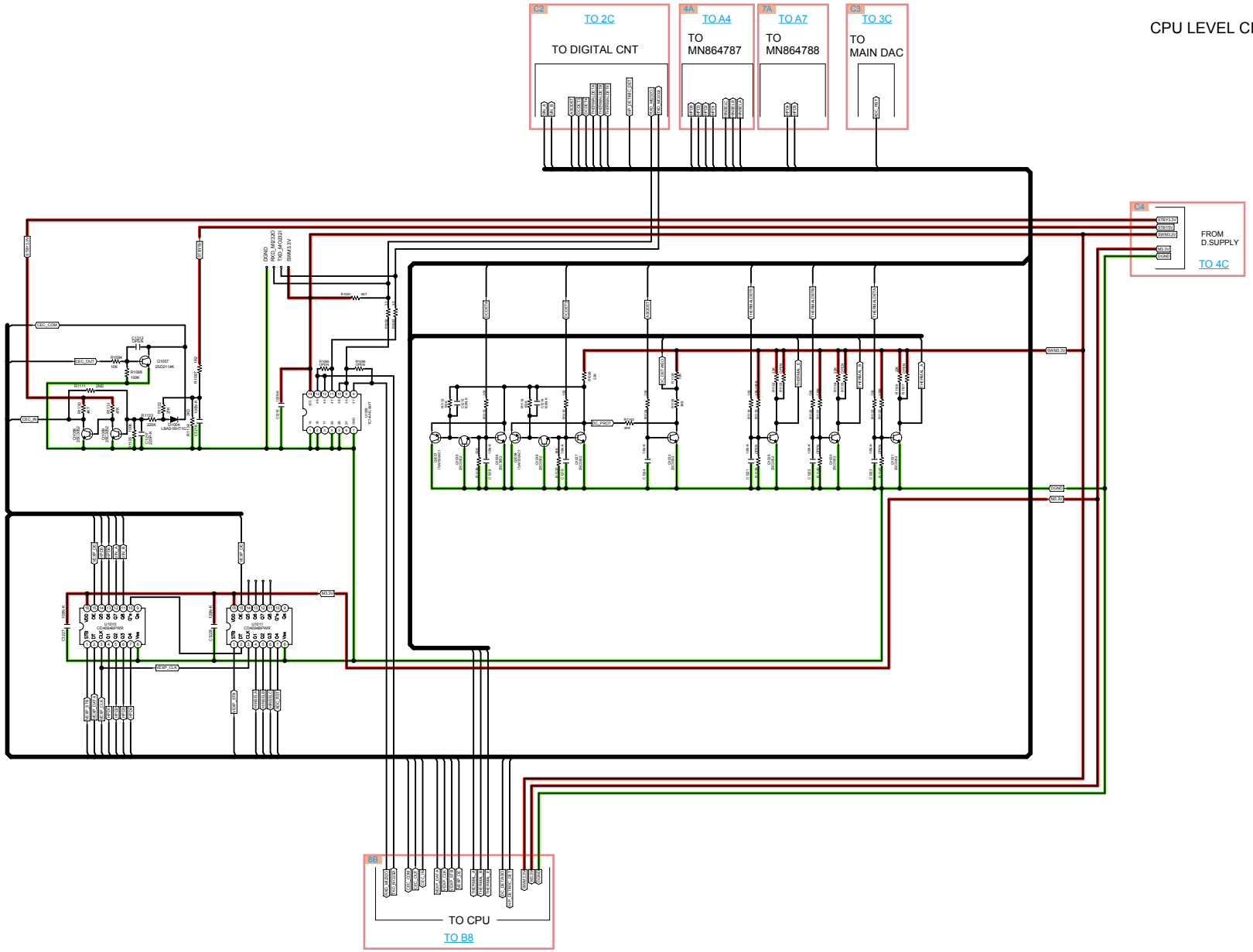

GND LINE | POWER+ LINE | POWER- LINE | ANALOG AUDIO | DIGITAL AUDIO | TMDS SIGNAL | VIDEO SIGNAL | COMPONENT (Y)

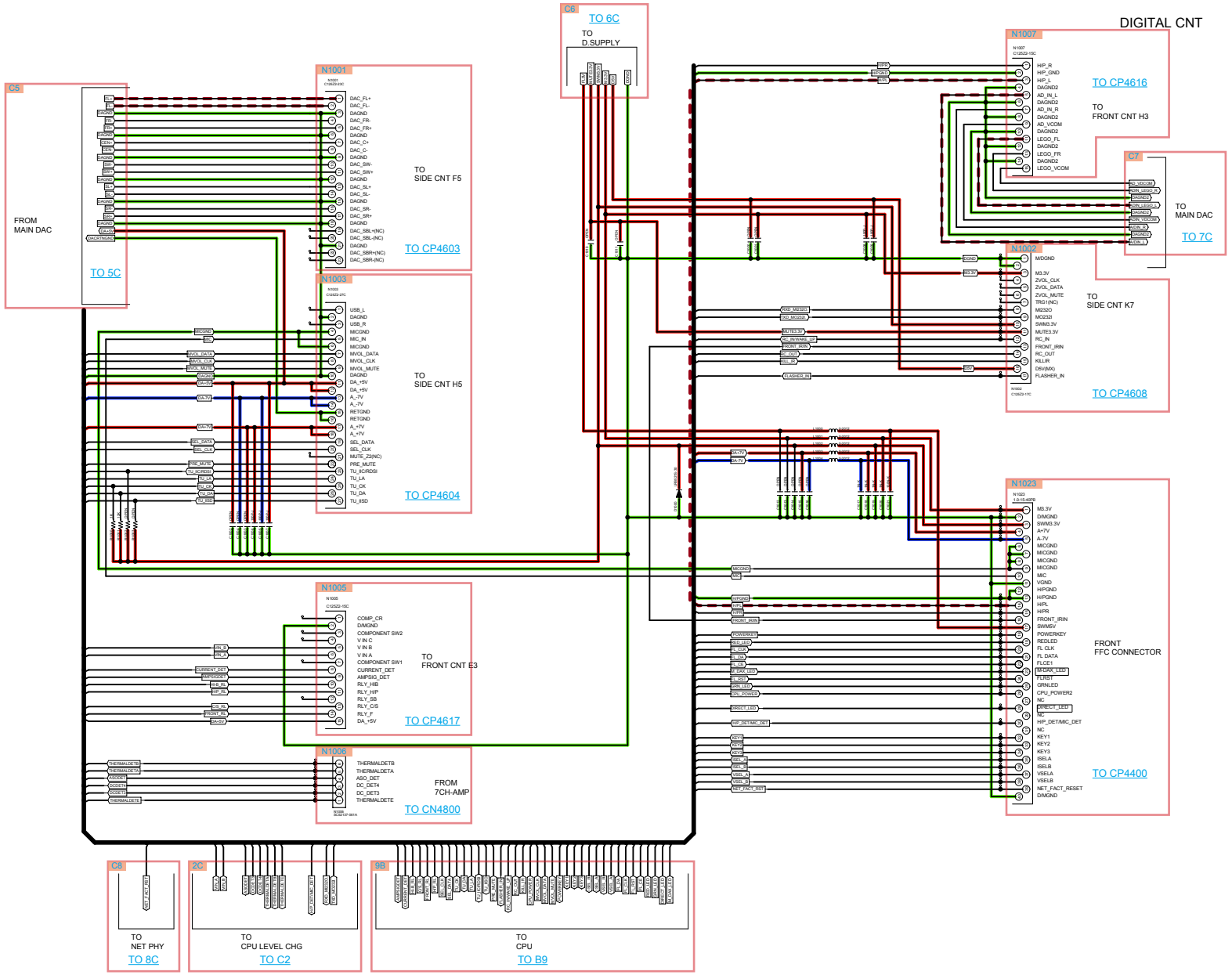

GND LINE POWER+ LINE POWER- LINE ANALOG AUDIO DIGITAL AUDIO TMDS SIGNAL VIDEO SIGNAL COMPONENT (Y)

SCH07_DIR APLD

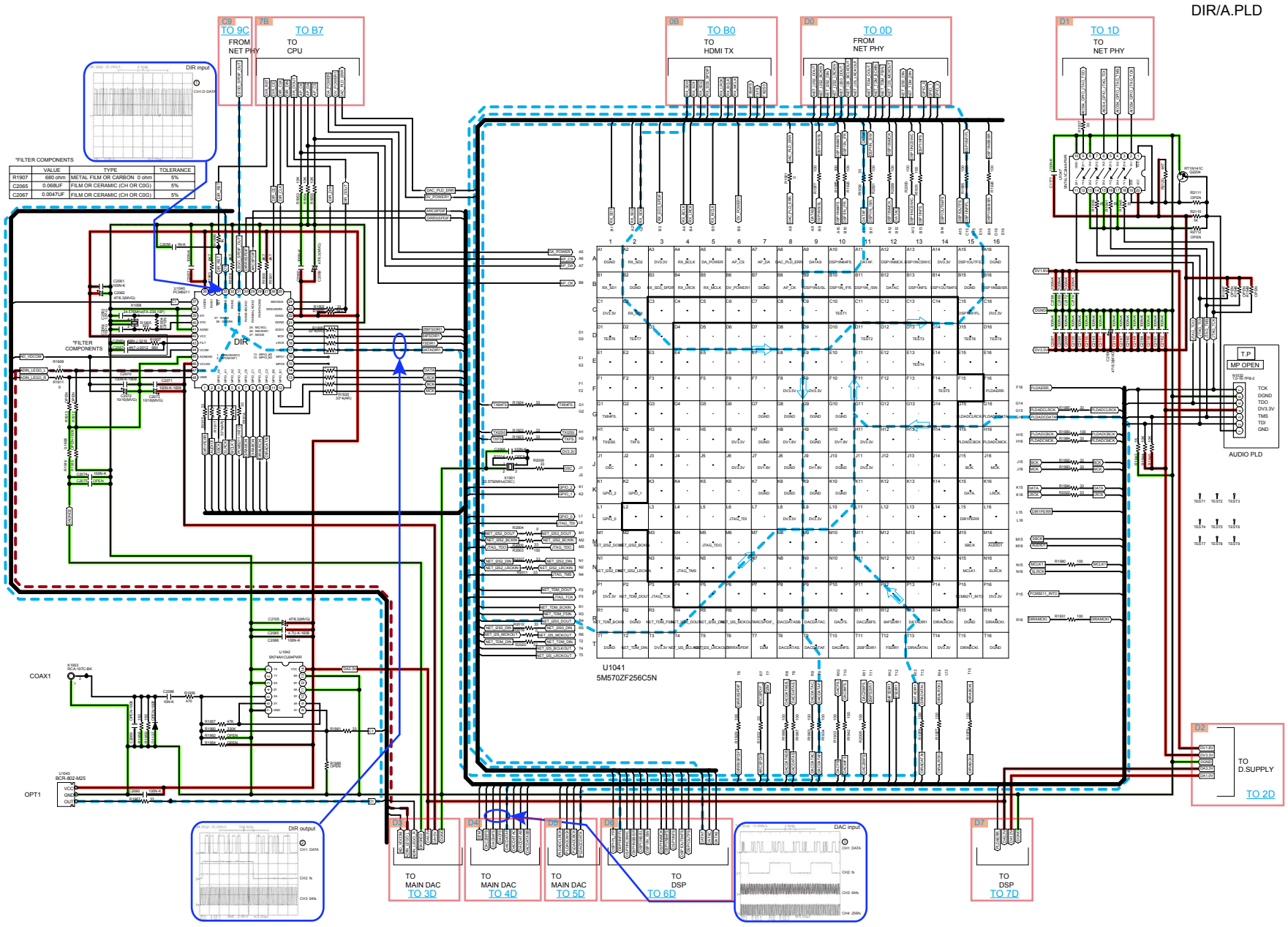

GND LINE | POWER+ LINE | POWER- LINE | ANALOG AUDIO | DIGITAL AUDIO | TMDS SIGNAL | VIDEO SIGNAL | COMPONENT (Y)

SCH08_MAIN DAC

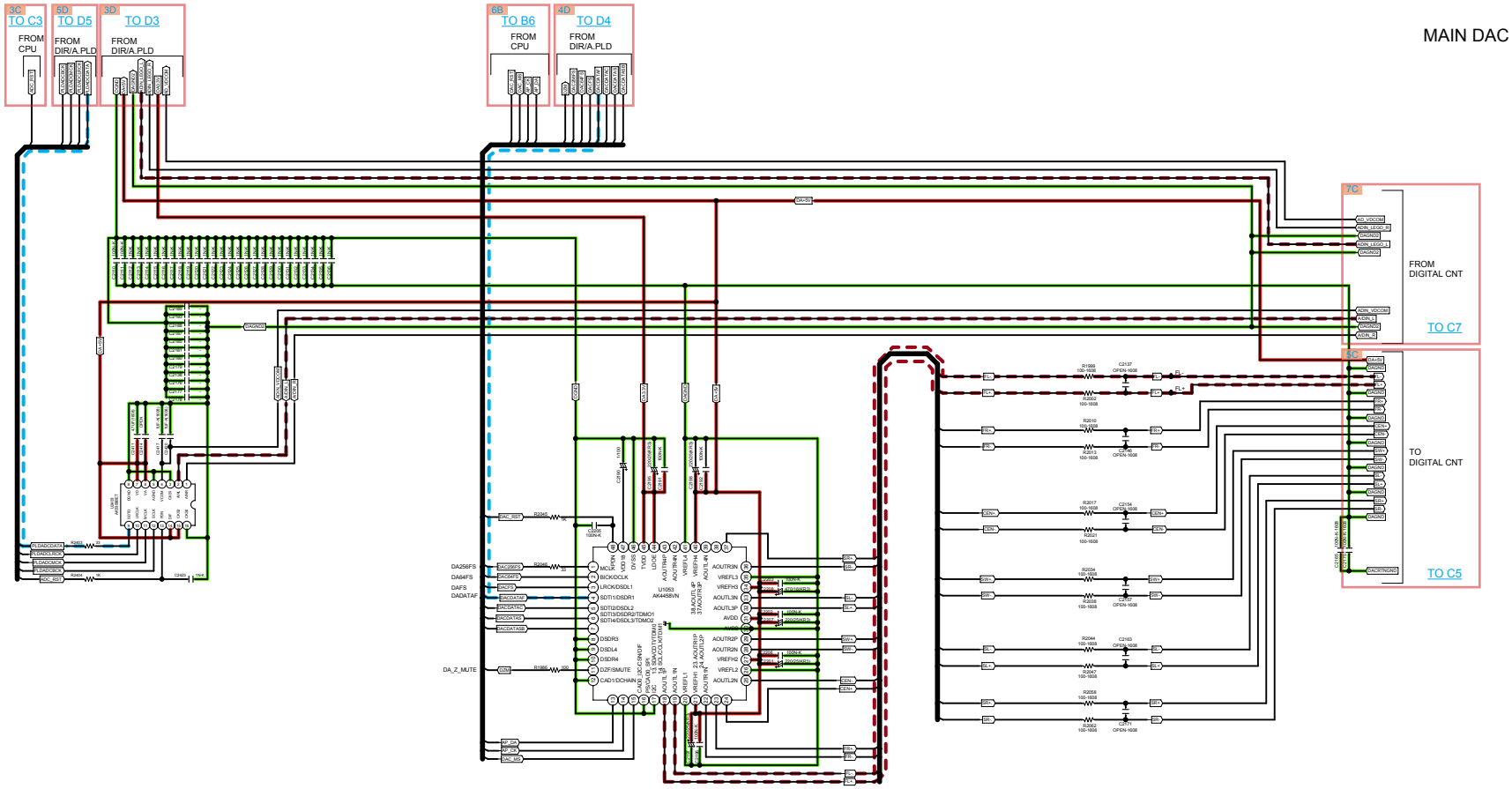

GND LINE POWER+ LINE POWER- LINE ANALOG AUDIO DIGITAL AUDIO TMDS SIGNAL VIDEO SIGNAL COMPONENT (Y)

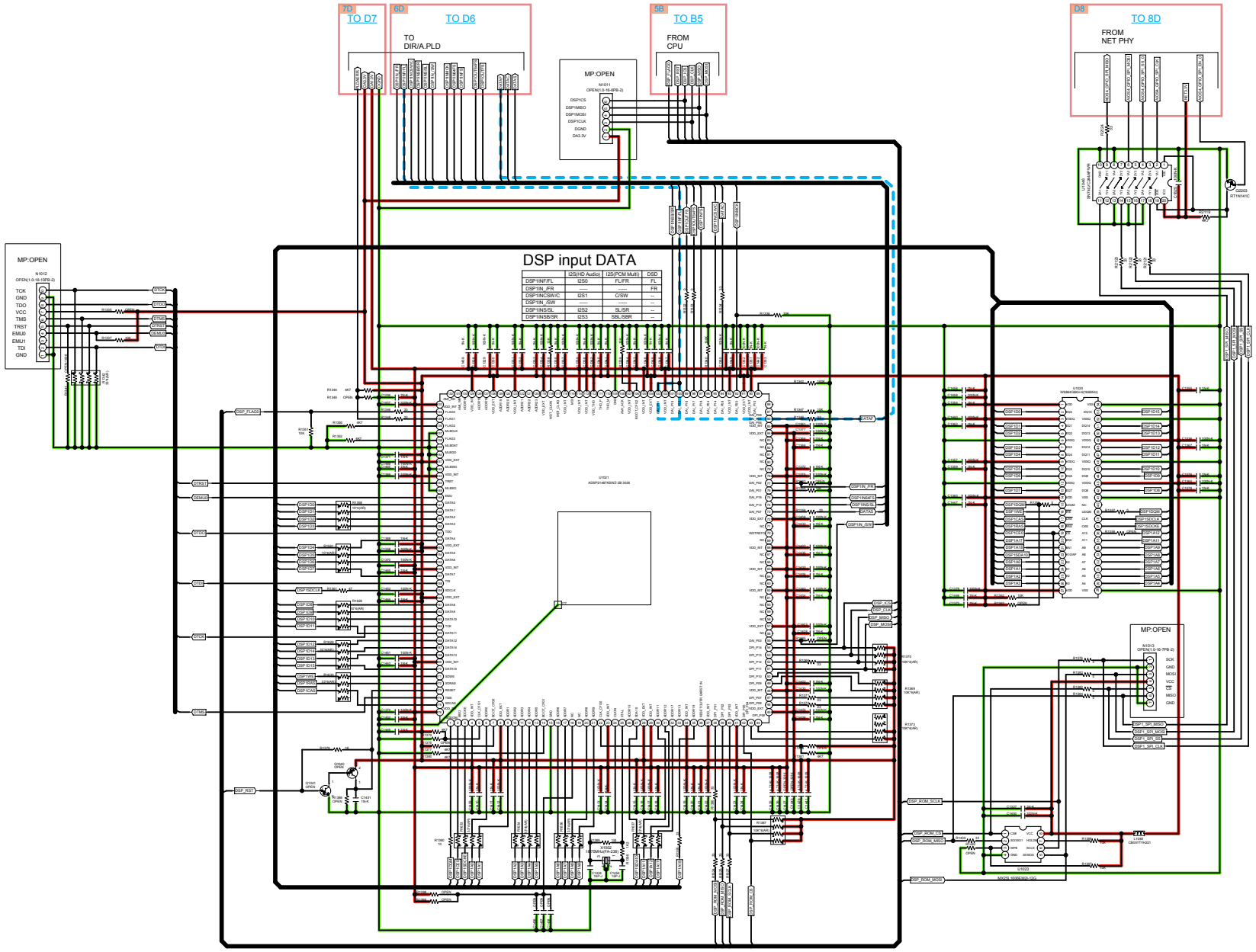

GND LINE POWER+ LINE POWER- LINE ANALOG AUDIO DIGITAL AUDIO TMDS SIGNAL VIDEO SIGNAL COMPONENT (Y)

SCH10_NET PHY

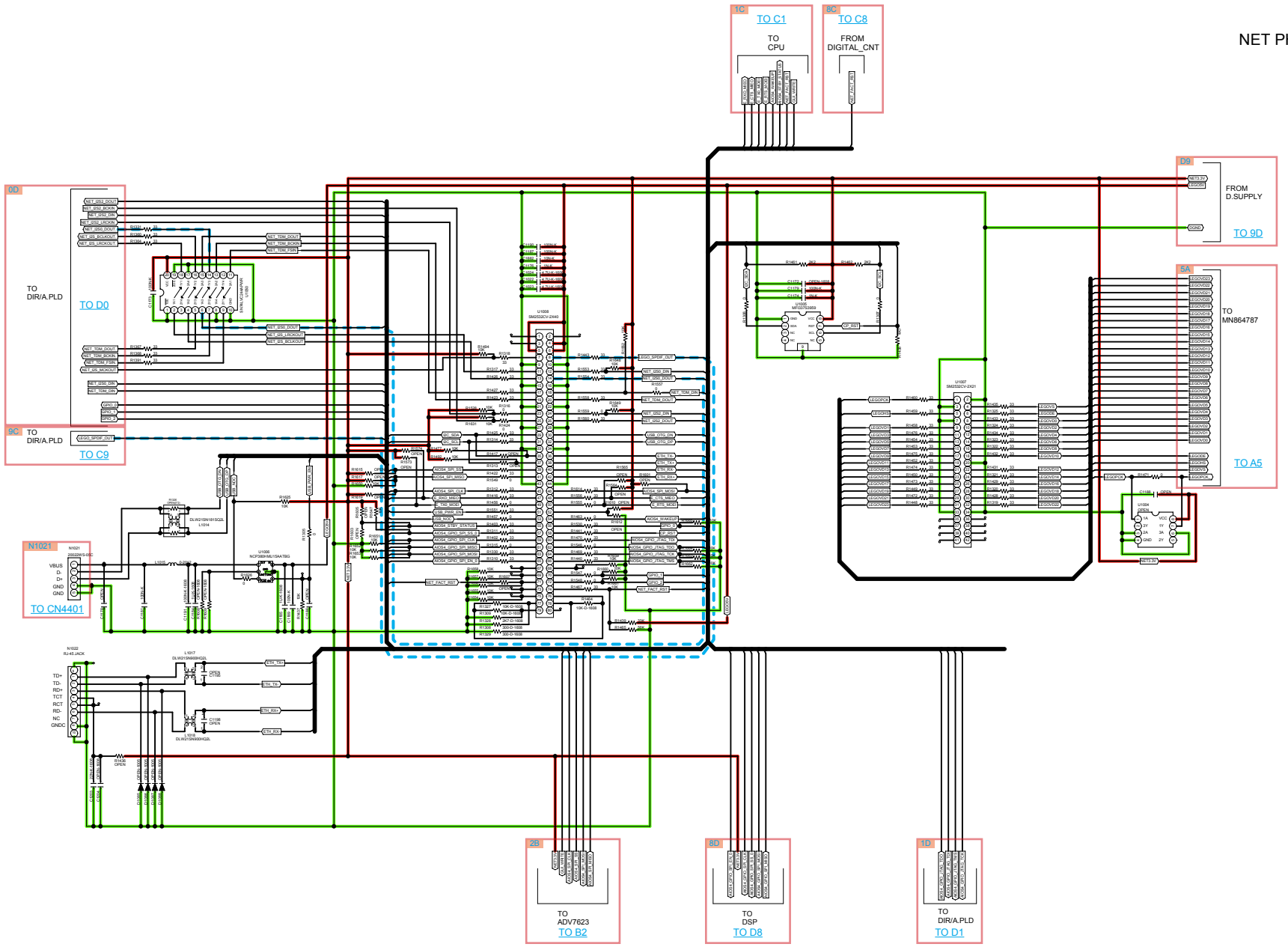

SCH11_D SUPPLY

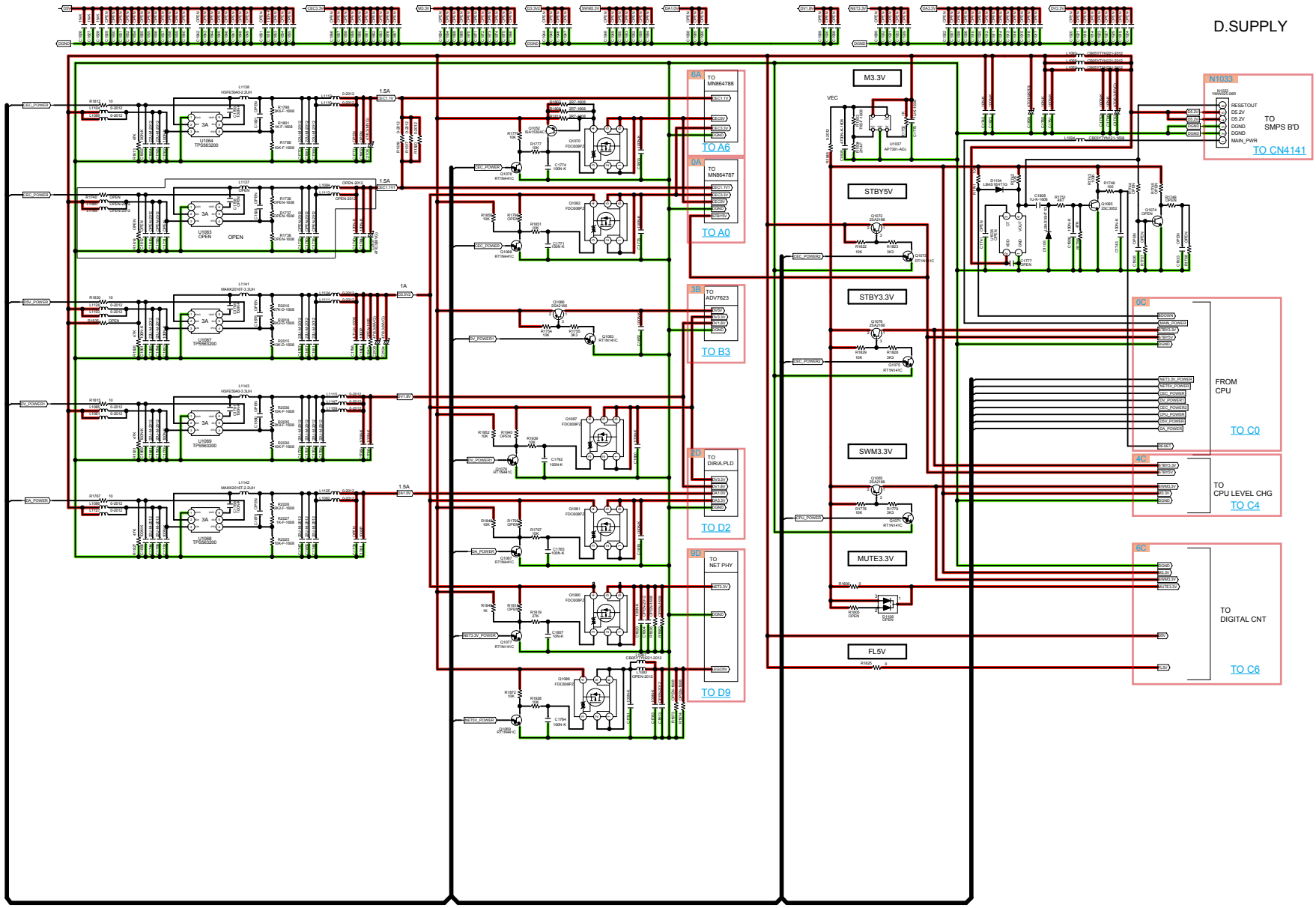

GND LINE POWER+ LINE POWER- LINE ANALOG AUDIO DIGITAL AUDIO TMDS SIGNAL VIDEO SIGNAL COMPONENT (Y)

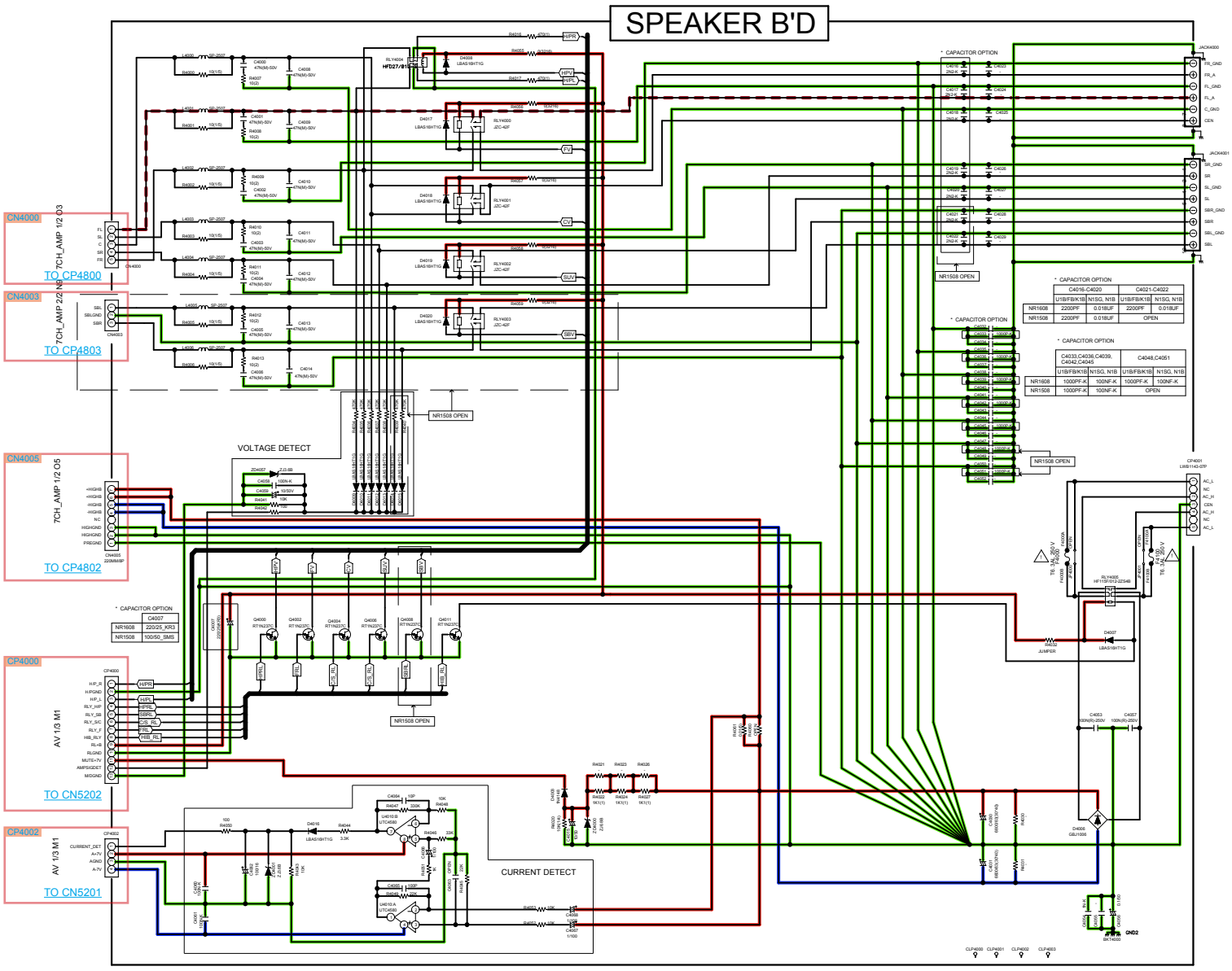

SPK_SCNT 1/2
MP

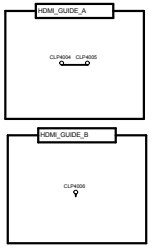

GND LINE POWER+ LINE POWER- LINE ANALOG AUDIO DIGITAL AUDIO TMDS SIGNAL VIDEO SIGNAL COMPONENT (Y)

SIDE CONNECTOR

SPK_SCNT 2/2
MP

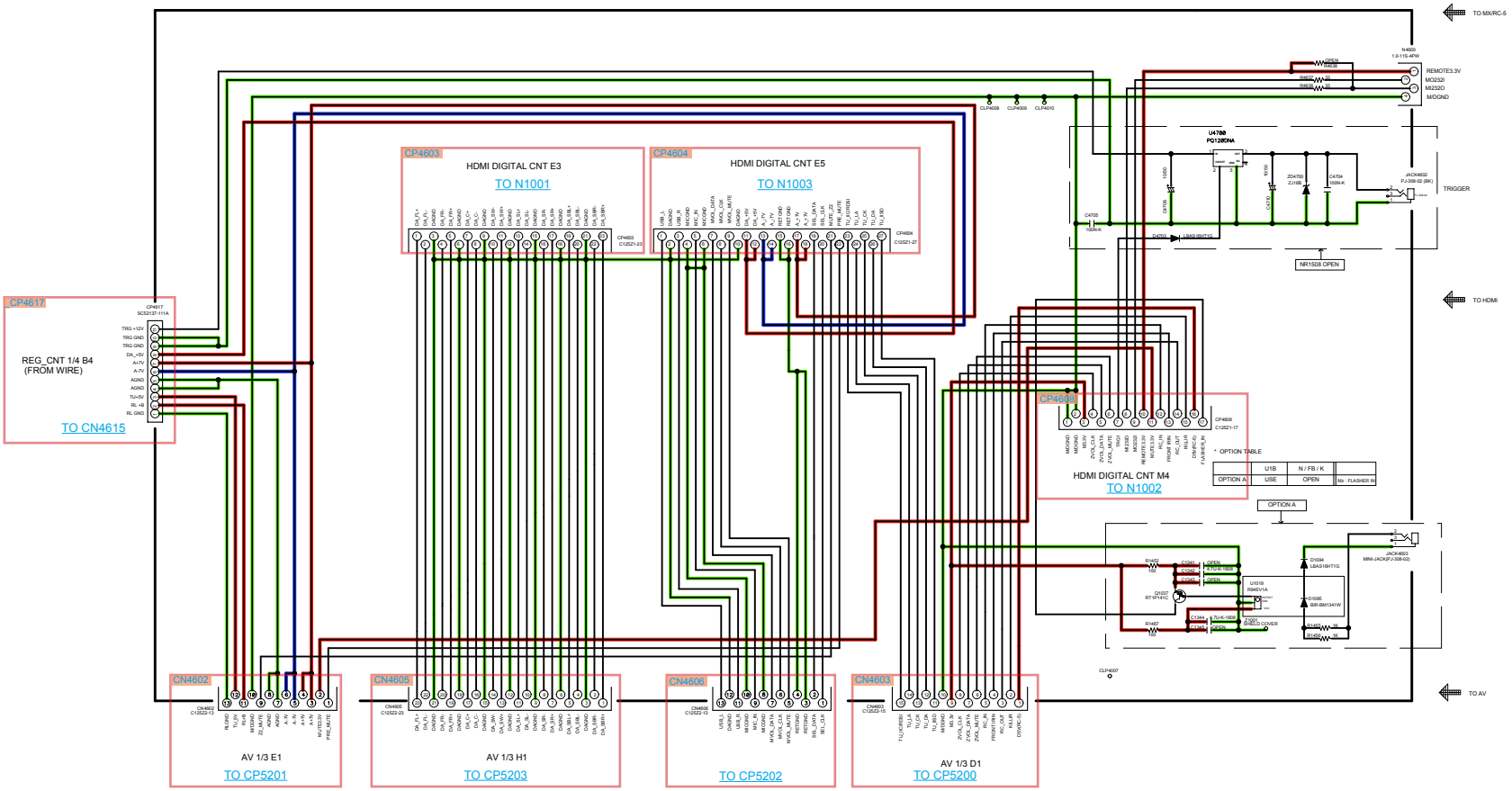

GND LINE | POWER+ LINE | POWER- LINE | ANALOG AUDIO | DIGITAL AUDIO | TMDS SIGNAL | VIDEO SIGNAL | COMPONENT (Y)

SCH14_INPUT

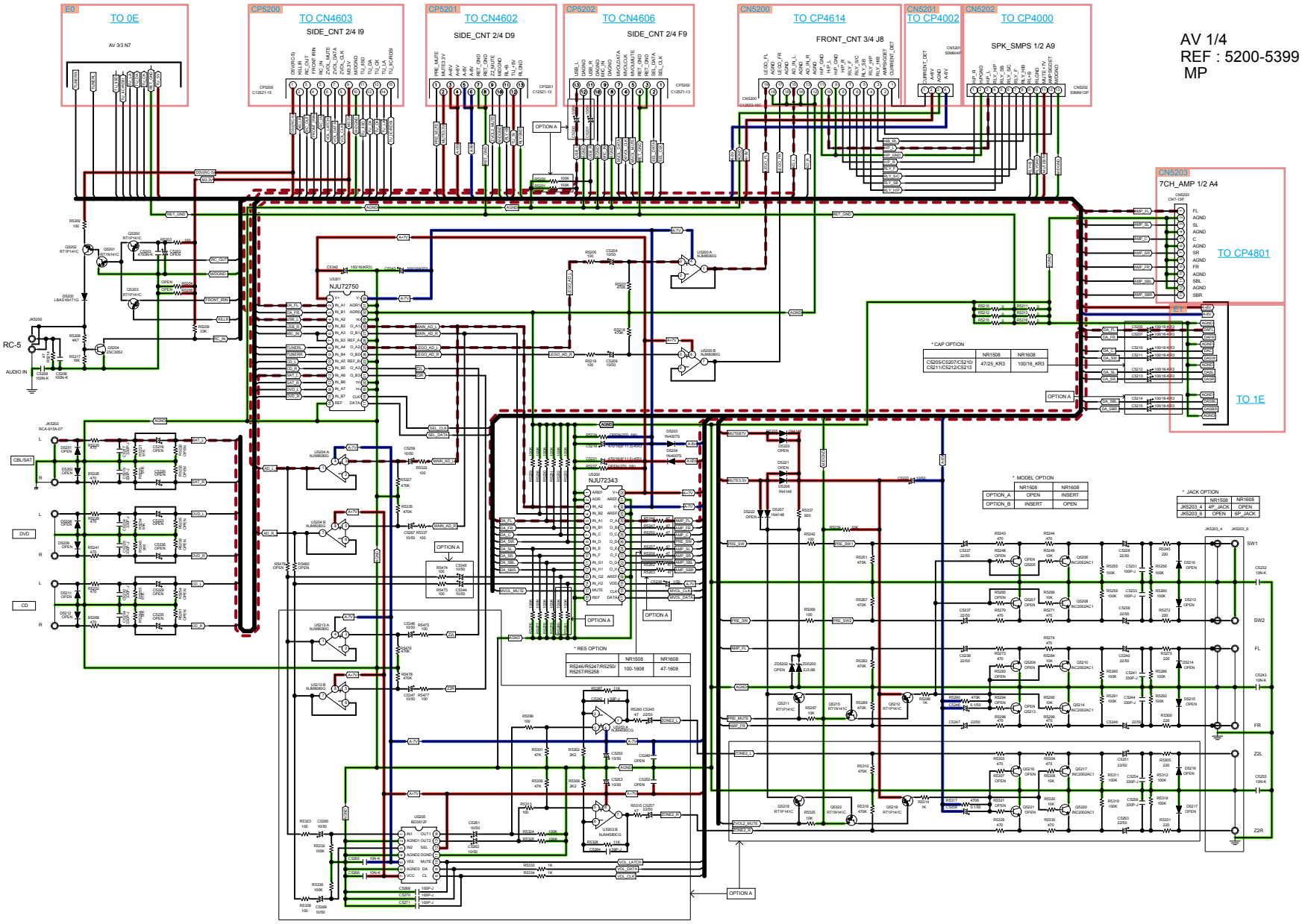

GND LINE POWER+ LINE POWER- LINE ANALOG AUDIO DIGITAL AUDIO TMDS SIGNAL VIDEO SIGNAL COMPONENT (Y)

SCH15_VIDEO

AV 2/4
REF : 5400-5499
MP

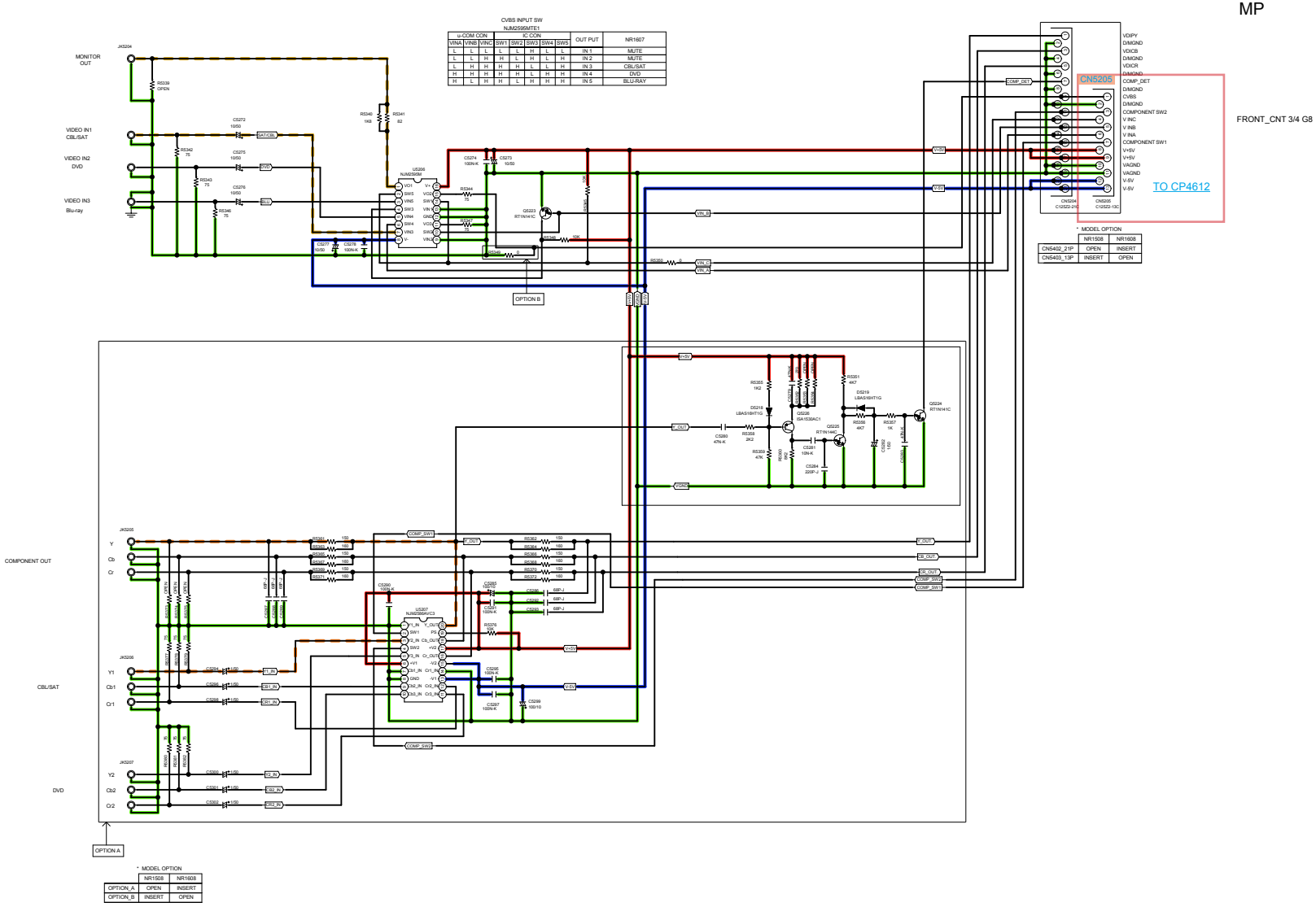

GND LINE POWER+ LINE POWER- LINE ANALOG AUDIO DIGITAL AUDIO TMDS SIGNAL VIDEO SIGNAL COMPONENT (Y)

AV 3/4
REF : 5500-5599
MP

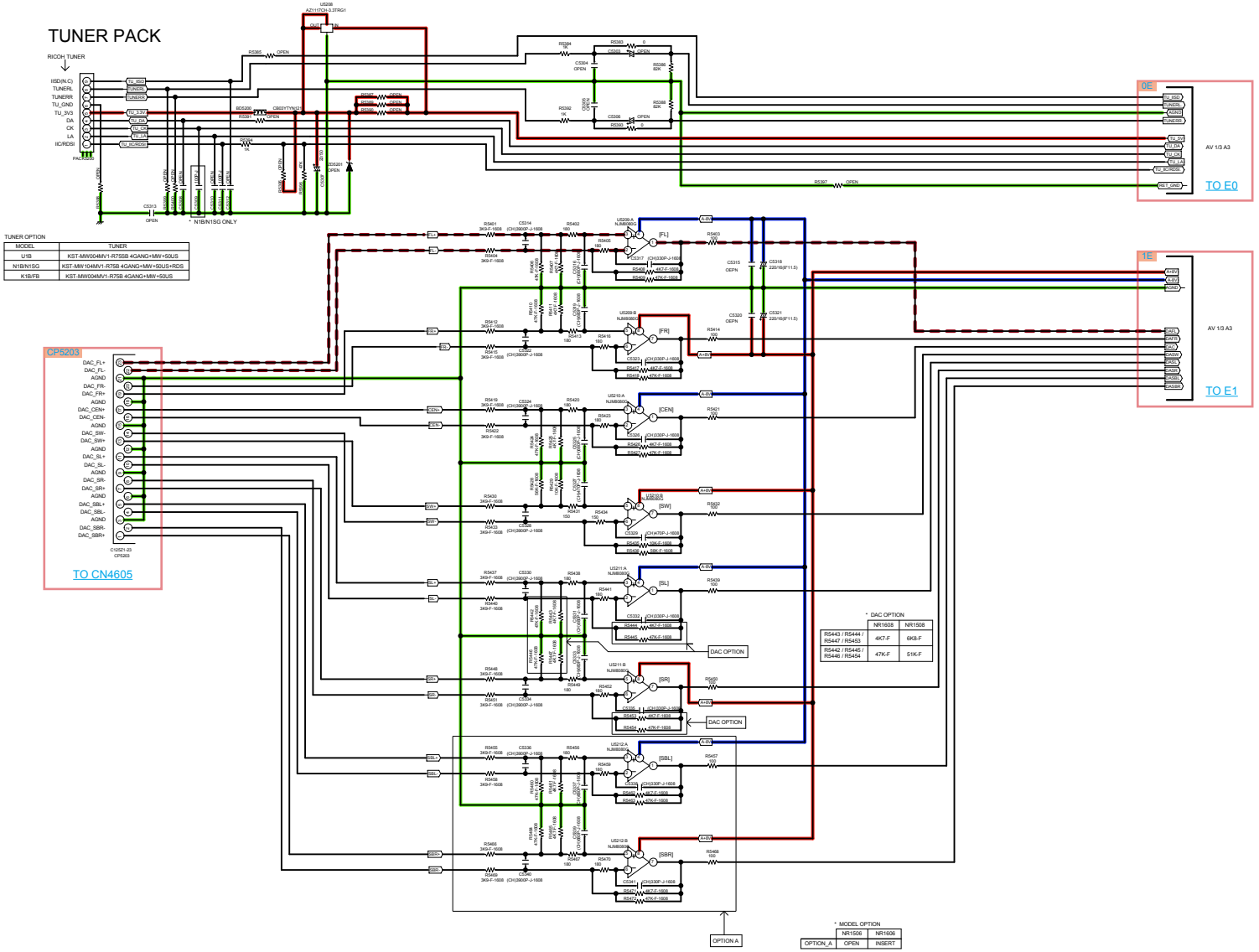

GND LINE POWER+ LINE POWER- LINE ANALOG AUDIO DIGITAL AUDIO TMDS SIGNAL VIDEO SIGNAL COMPONENT (Y)

SCH17_F_HDMI

AV 4/4
REF : 3000-3099
MP

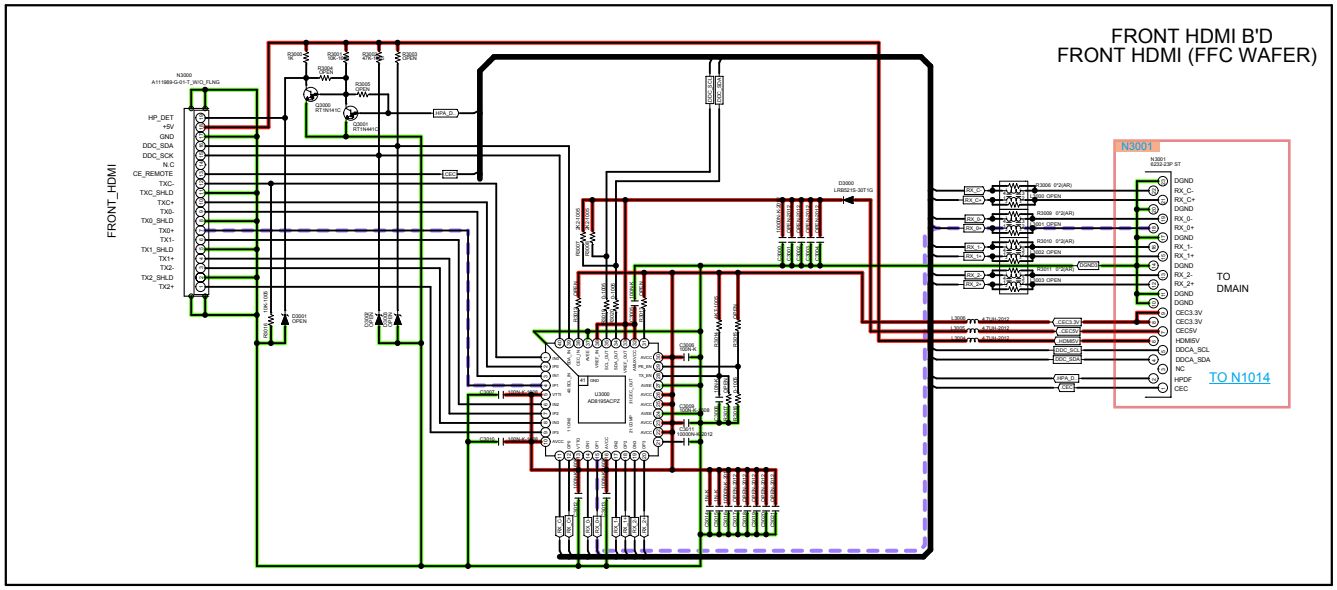

GND LINE POWER+ LINE POWER- LINE ANALOG AUDIO DIGITAL AUDIO TMDS SIGNAL VIDEO SIGNAL COMPONENT (Y)

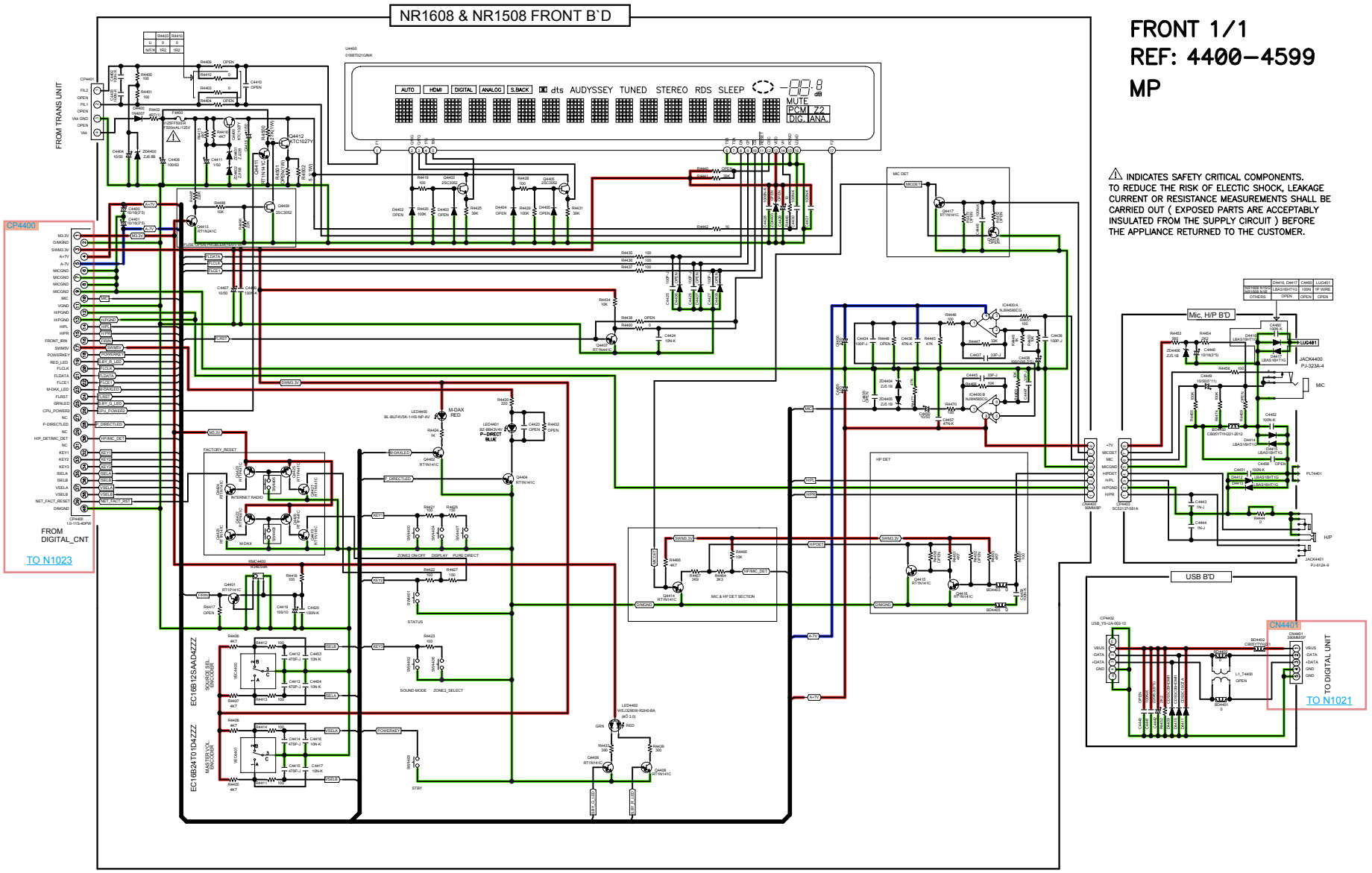

GND LINE | POWER+ LINE | POWER- LINE | ANALOG AUDIO | DIGITAL AUDIO | TMDS SIGNAL | VIDEO SIGNAL | COMPONENT (Y)

7CH_AMP 1/2
REF : 4800-5199
MP

NR1608, NR1508 AMP B'D 1/2

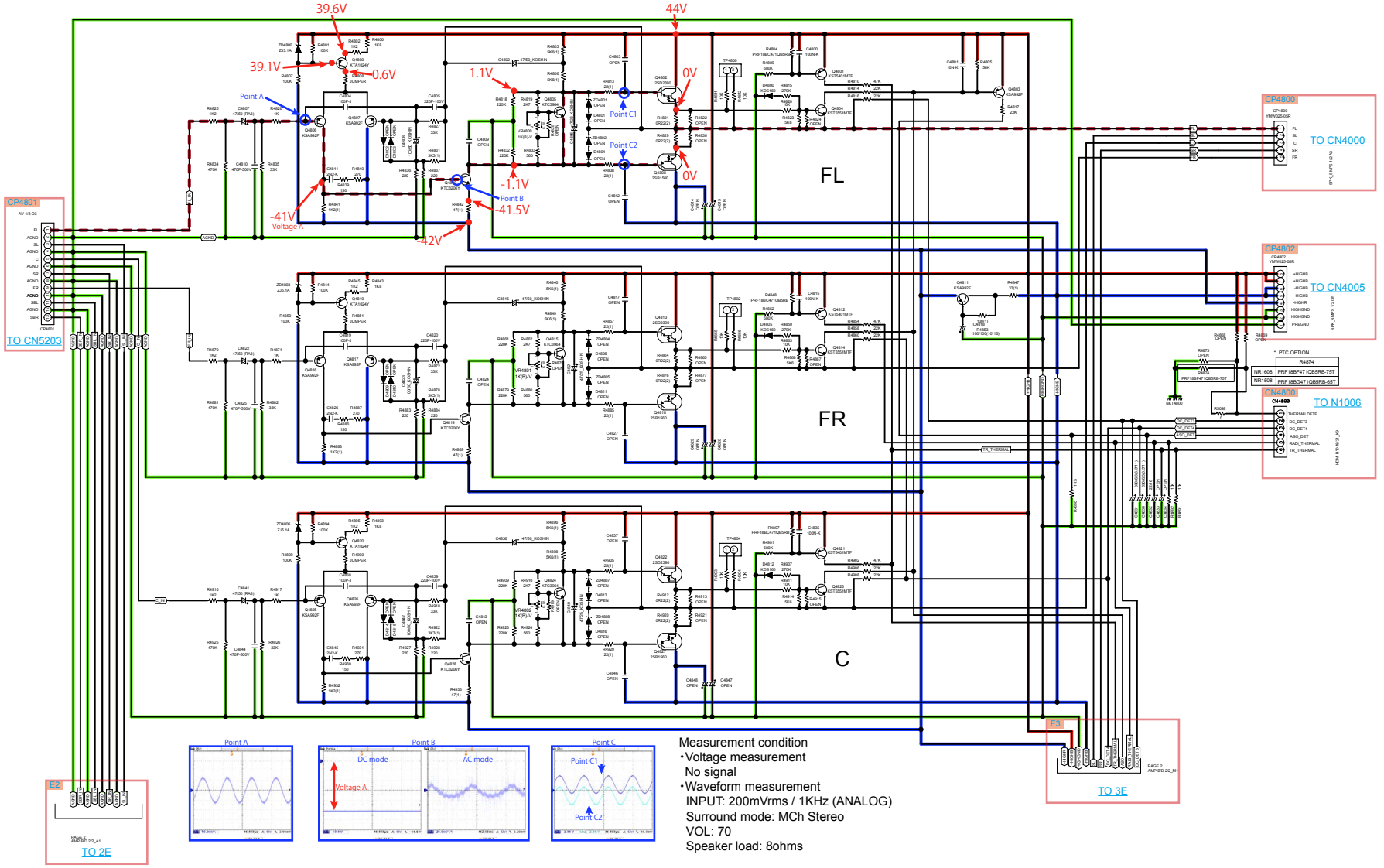

Measurement condition
・Voltage measurement
No signal
・Waveform measurement
INPUT: 200mVrms / 1KHz (ANALOG)
Surround mode: MCh Stereo
VOL: 70
Speaker load: 8ohms

GND LINE POWER+ LINE POWER- LINE ANALOG AUDIO DIGITAL AUDIO TMDS SIGNAL VIDEO SIGNAL COMPONENT (Y)

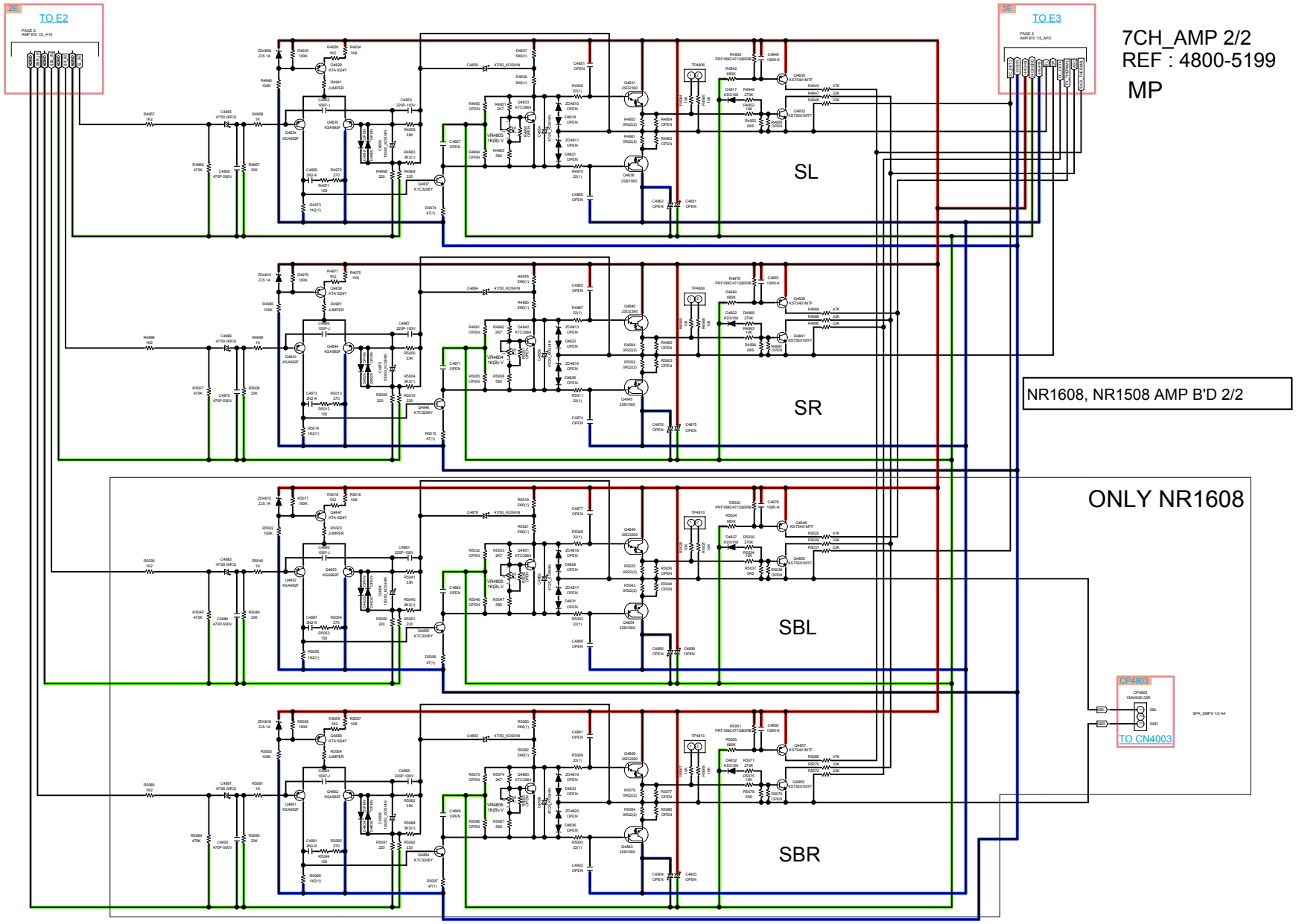

7CH_AMP 2/2
REF : 4800-5199
MP

NR1608, NR1508 AMP B'D 2/2

ONLY NR1608

GND LINE POWER+ LINE POWER- LINE ANALOG AUDIO DIGITAL AUDIO TMDS SIGNAL VIDEO SIGNAL COMPONENT (Y)

SMPS_REG_FCNT 1/3
MP

SMPS B'D

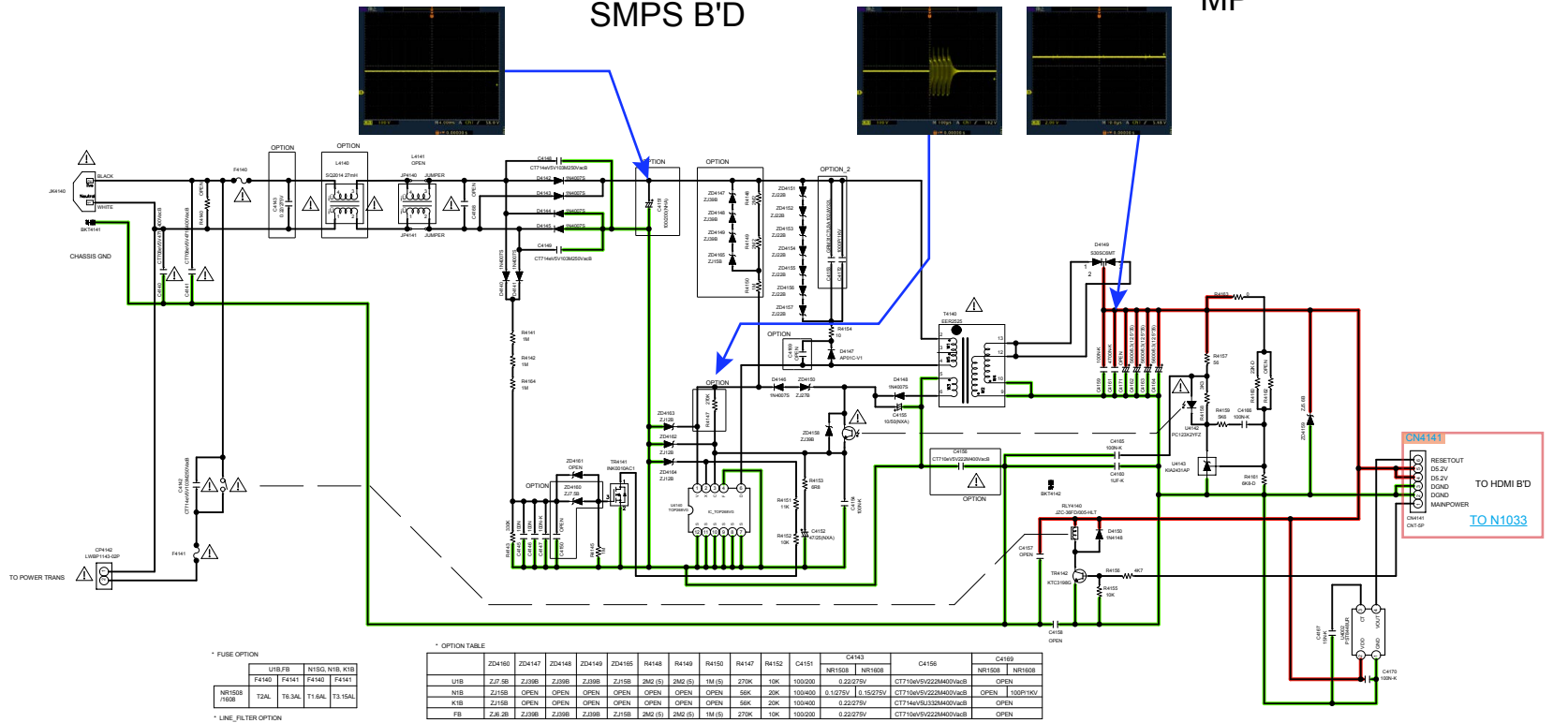

* FUSE OPTION

	U1B,FB		N1SG, N1B, K1B	
	F4140	F4141	F4140	F4141
NR1508 /1608	T2AL	T6.3AL	T1.6AL	T3.15AL

* LINE_FILTER OPTION

	U1B,FB	N1SG, N1B,K1B
	L4140	L4140
NR1508 /1608	27mH	50mH

* OPTION TABLE

	ZD4160	ZD4147	ZD4148	ZD4149	ZD4165	R4148	R4149	R4150	R4147	R4152	C4151	C4143		C4156	C4169	
												NR1508	NR1608		NR1508	NR1608
U1B	ZJ7.5B	ZJ39B	ZJ39B	ZJ39B	ZJ15B	2M2 (5)	2M2 (5)	1M (5)	270K	10K	100/200	0.22/275V		CT710eV5V222M400VacB	OPEN	
N1B	ZJ15B	OPEN	OPEN	OPEN	OPEN	OPEN	OPEN	OPEN	56K	20K	100/400	0.1/275V	0.15/275V	CT710eV5V222M400VacB	OPEN	100P/1KV
K1B	ZJ15B	OPEN	OPEN	OPEN	OPEN	OPEN	OPEN	OPEN	56K	20K	100/400	0.22/275V		CT714eV5U332M400VacB	OPEN	
FB	ZJ6.2B	ZJ39B	ZJ39B	ZJ39B	ZJ15B	2M2 (5)	2M2 (5)	1M (5)	270K	10K	100/200	0.22/275V		CT710eV5V222M400VacB	OPEN	

* OPTION_2

	C4153	C4172
NR1508	GRM31C7U3A102JW32L	OPEN
NR1608	OPEN	1000P/1KV

⚠ INDICATES SAFETY CRITICAL COMPONENTS.
TO REDUCE THE RISK OF ELECTIC SHOCK, LEAKAGE CURRENT OR RESISTANCE MEASUREMENTS SHALL BE CARRIED OUT (EXPOSED PARTS ARE ACCEPTABLY INSULATED FROM THE SUPPLY CIRCUIT) BEFORE THE APPLIANCE RETURNED TO THE CUSTOMER.

GND LINE POWER+ LINE POWER- LINE ANALOG AUDIO DIGITAL AUDIO TMDS SIGNAL VIDEO SIGNAL COMPONENT (Y)

SMPS_REG_FCNT 2/3

MP

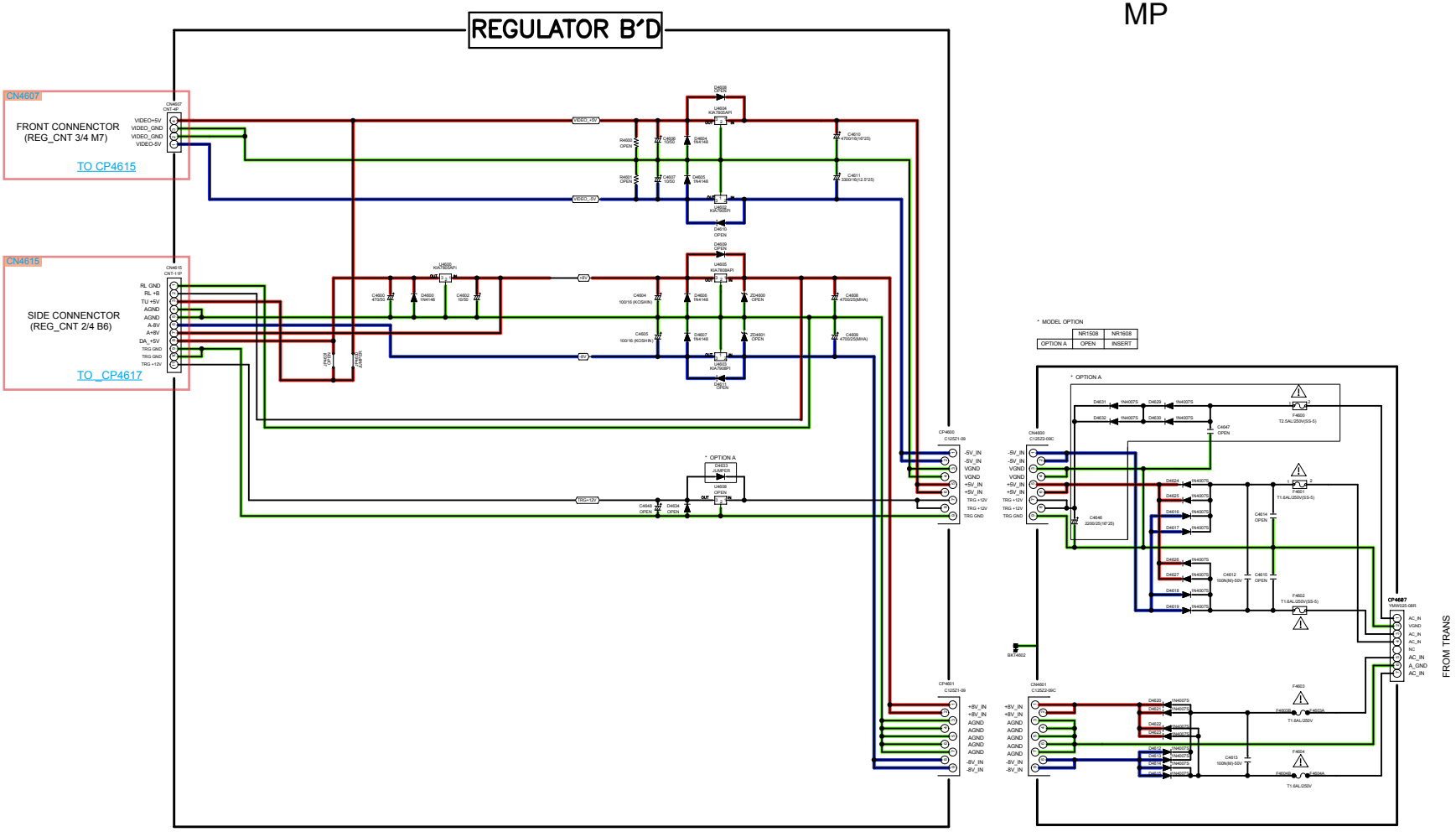

⚠ INDICATES SAFETY CRITICAL COMPONENTS.
TO REDUCE THE RISK OF ELECTIC SHOCK, LEAKAGE CURRENT OR RESISTANCE MEASUREMENTS SHALL BE CARRIED OUT (EXPOSED PARTS ARE ACCEPTABLY INSULATED FROM THE SUPPLY CIRCUIT) BEFORE THE APPLIANCE RETURNED TO THE CUSTOMER.

GND LINE | POWER+ LINE | POWER- LINE | ANALOG AUDIO | DIGITAL AUDIO | TMDS SIGNAL | VIDEO SIGNAL | COMPONENT (Y)

FRONT CONNECTOR

SMPS_REG_FCNT 3/3
MP

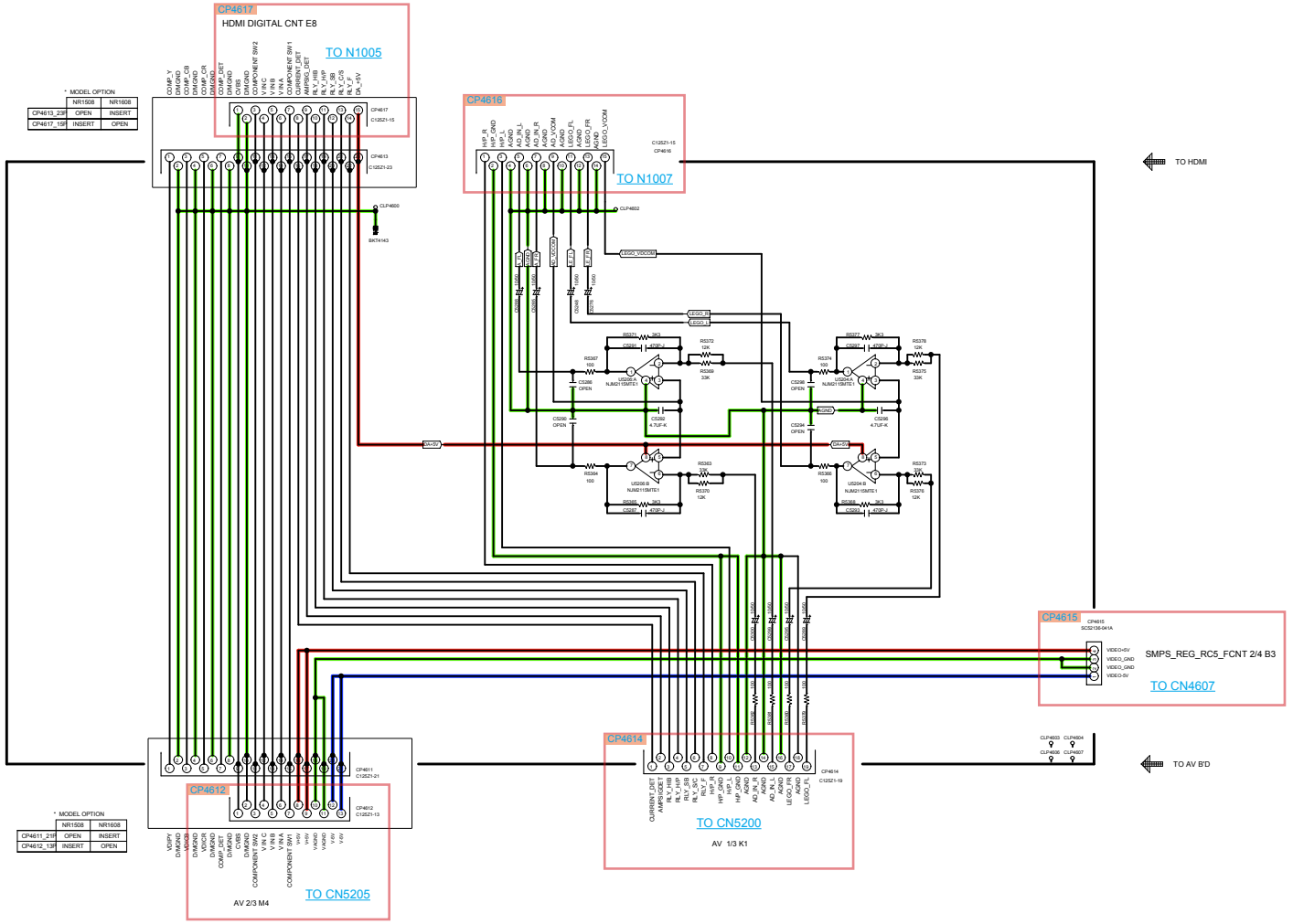

GND LINE | POWER+ LINE | POWER- LINE | ANALOG AUDIO | DIGITAL AUDIO | TMDS SIGNAL | VIDEO SIGNAL | COMPONENT (Y)

DIGITAL, F HDMI

Lead-free Solder
When soldering, use the Lead-free Solder (Sn-Ag-Cu).

DIGITAL (A SIDE)

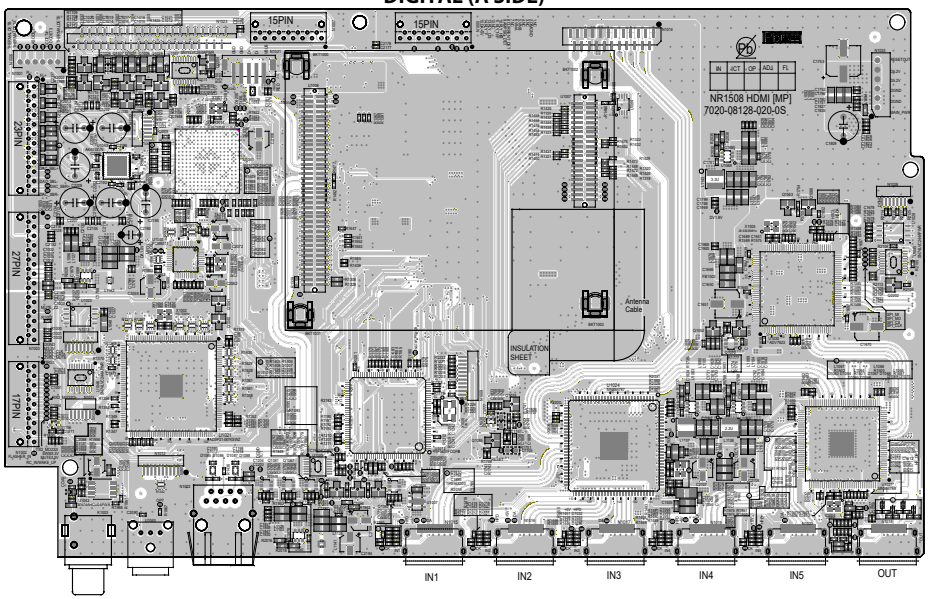

DIGITAL (B SIDE)

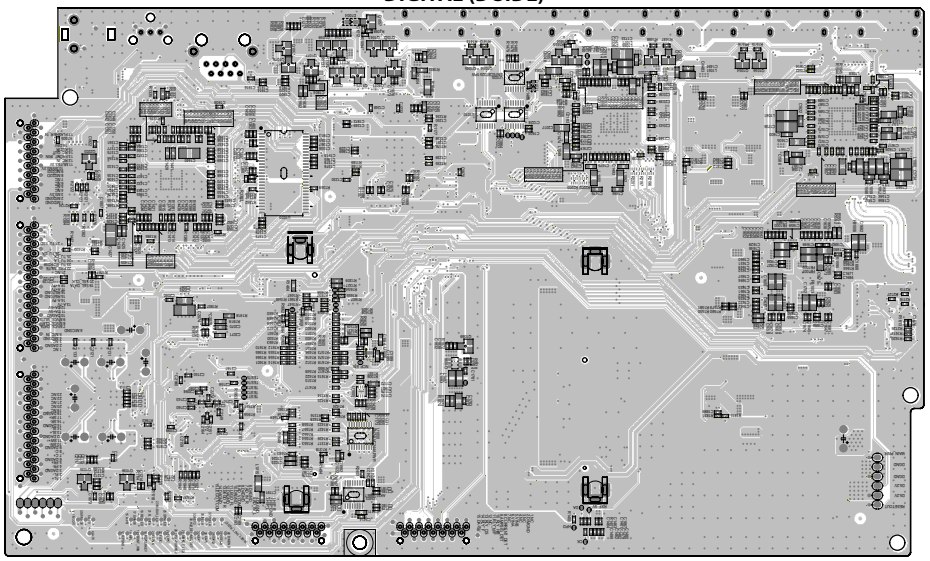

F HDMI (A SIDE)

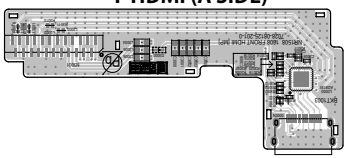

F HDMI (B SIDE)

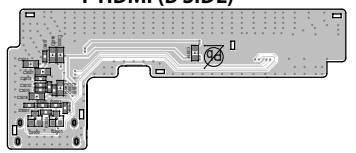

AV (A SIDE)

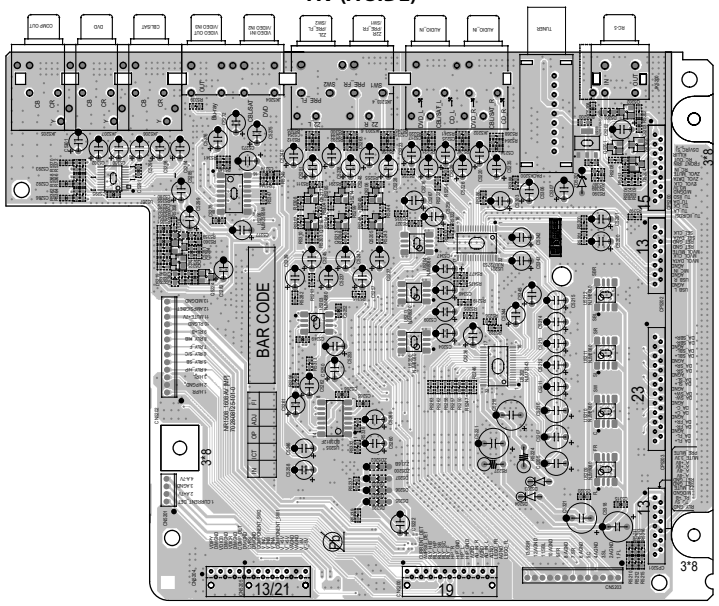

AV (B SIDE)

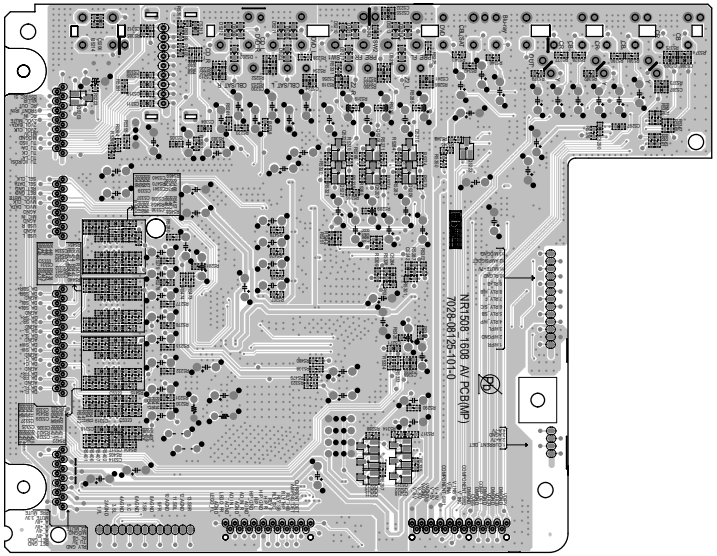

SPK, SIDE CNT, HDMI GUIDE A, HDMI GUIDE B

SPK (A SIDE)

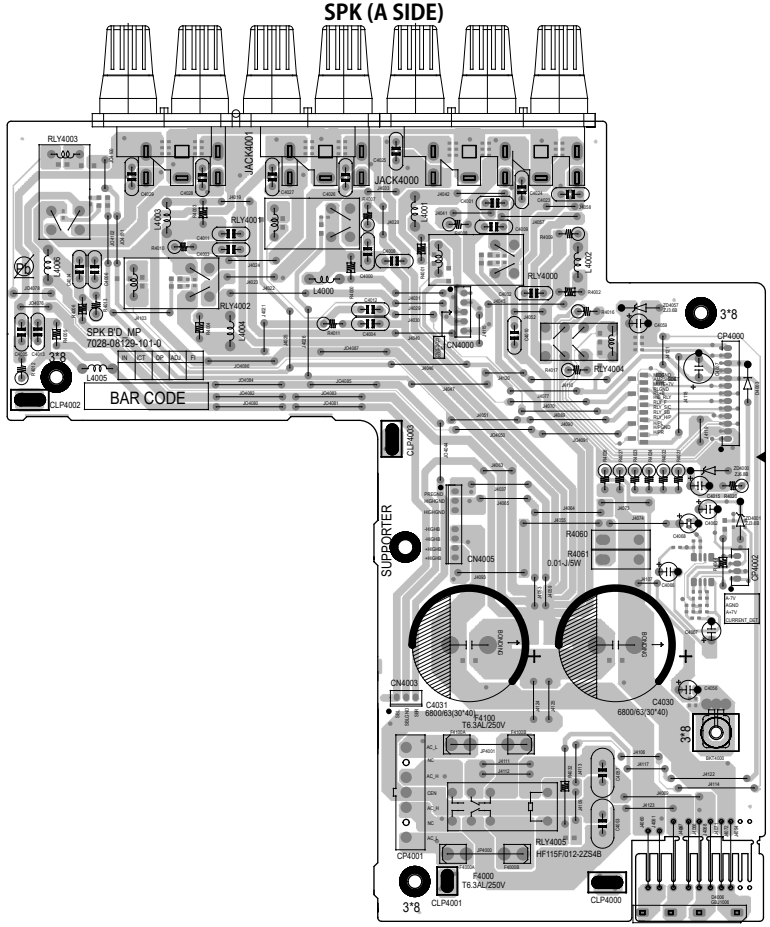

SPK (B SIDE)

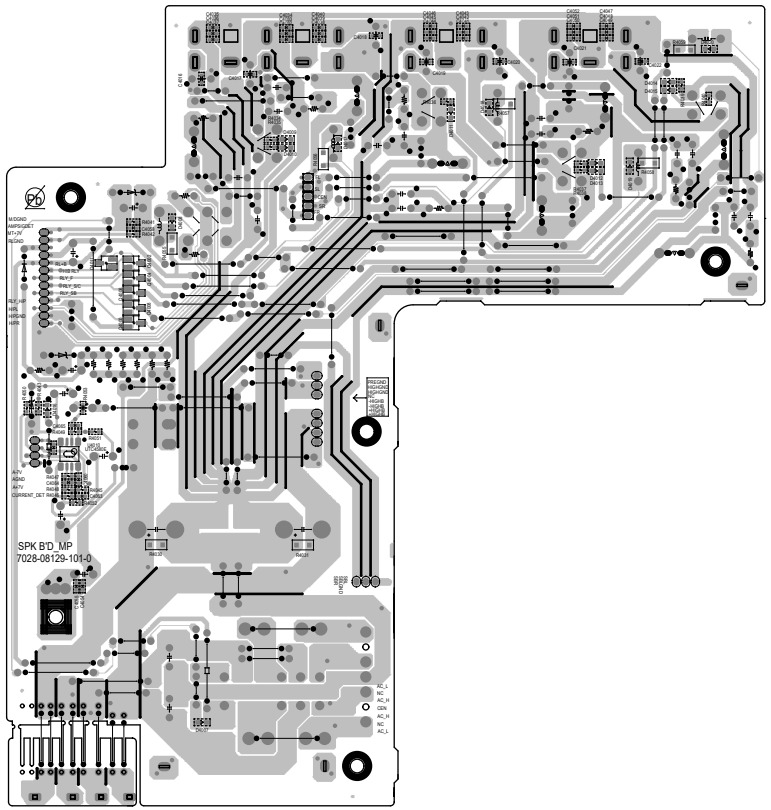

HDMI_GUIDE_A (A SIDE)

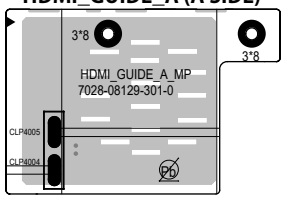

SIDE CNT (A SIDE)

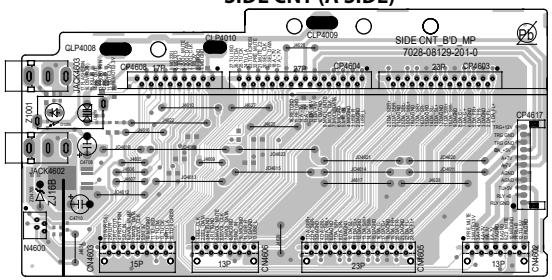

SIDE CNT (B SIDE)

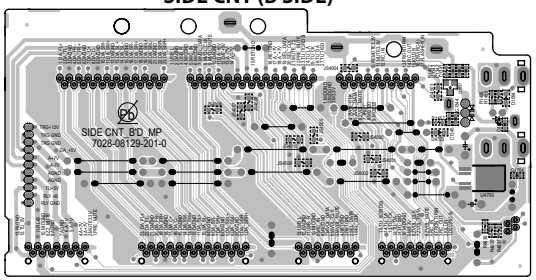

HDMI_GUIDE_B (A SIDE)

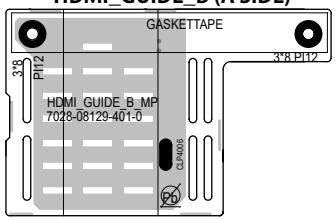

AMP (A SIDE)

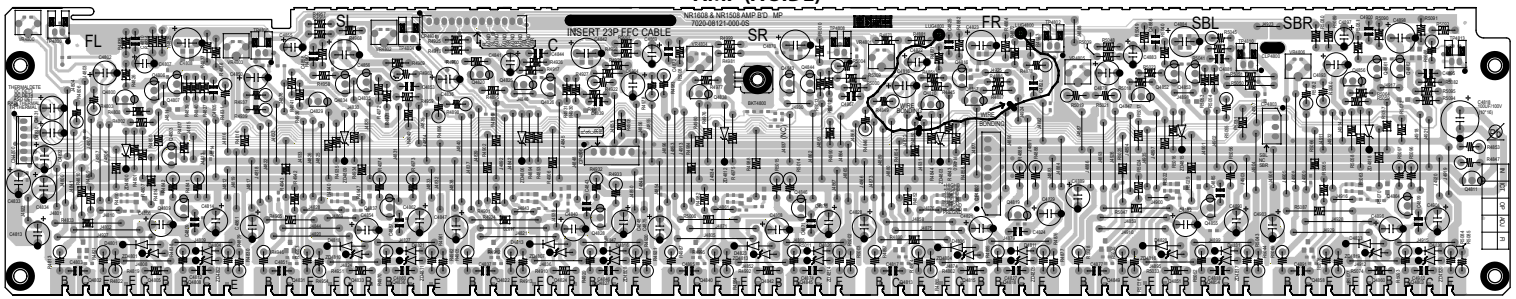

AMP (B SIDE)

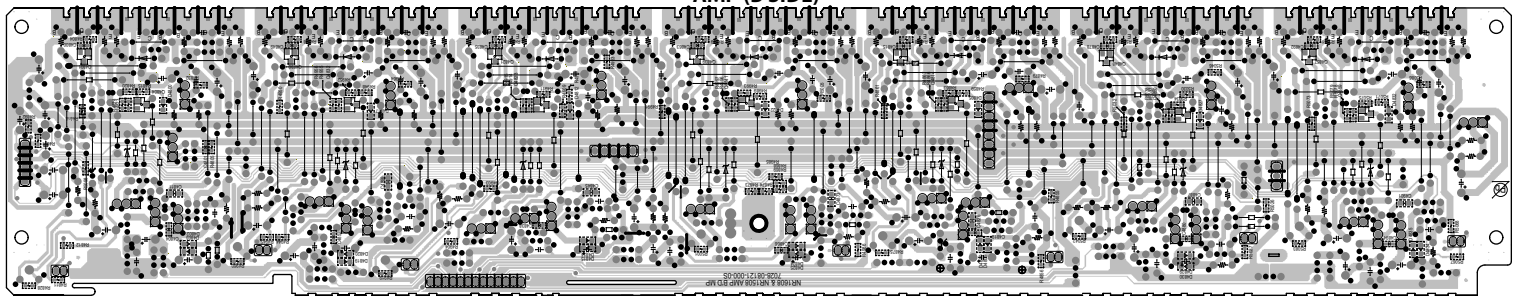

FRONT (A SIDE)

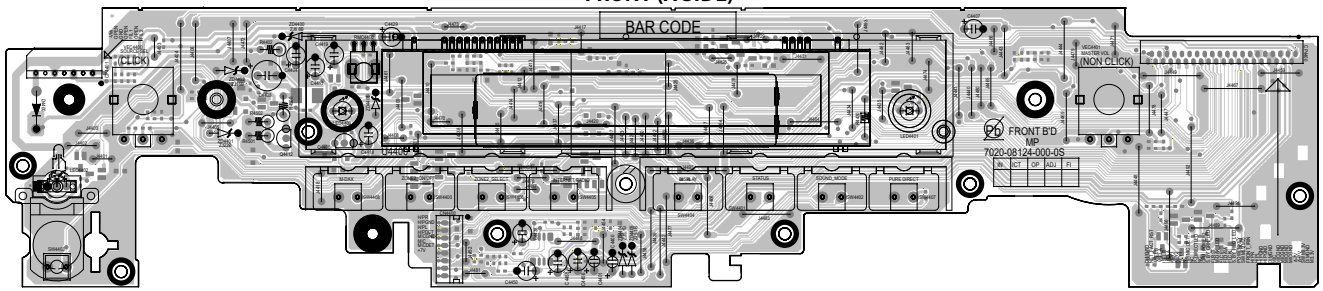

MC HP (A SIDE)

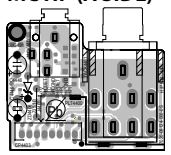

MC HP (B SIDE)

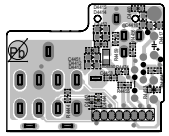

FRONT (B SIDE)

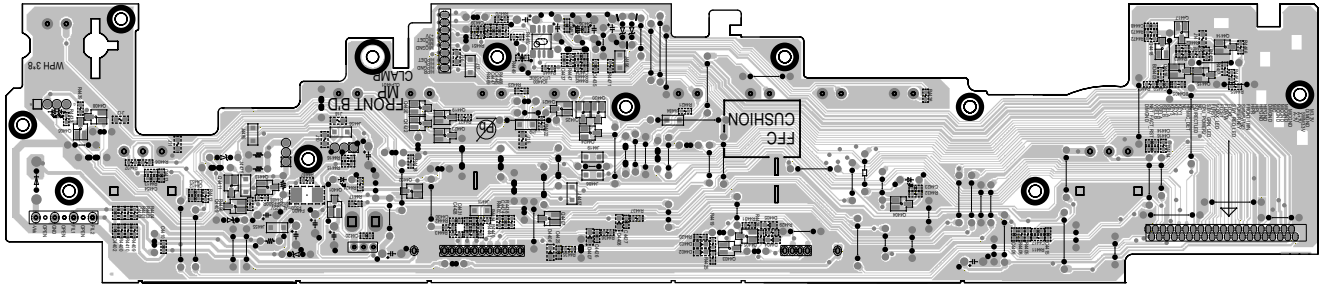

USB (A SIDE)

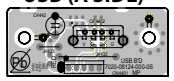

USB (B SIDE)

REG, GUIDE L, FRONT CNT, REG CNT, SMPS

REG (A SIDE)

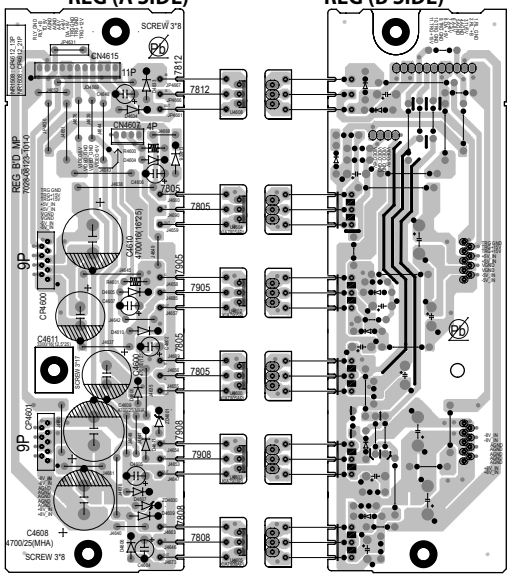

REG (B SIDE)

GUIDE L (A SIDE)

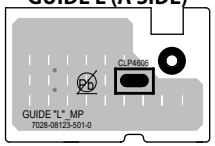

FRONT CNT (A SIDE)

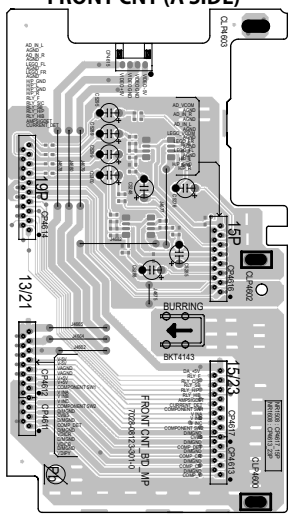

FRONT CNT (B SIDE)

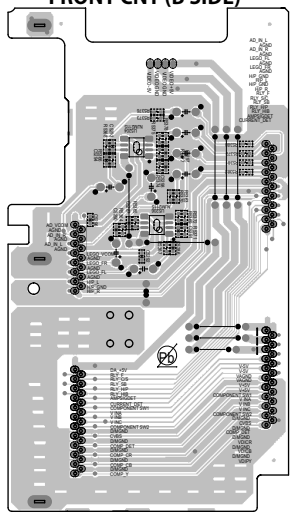

REG CNT (A SIDE)

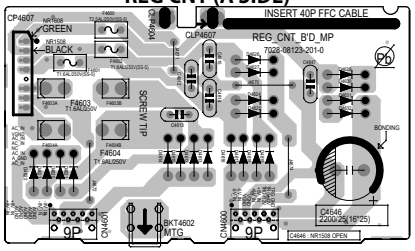

REG CNT (B SIDE)

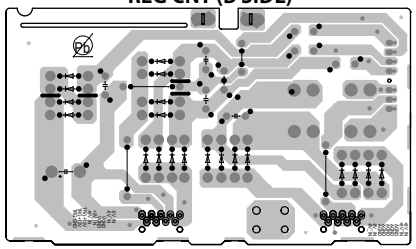

SMPS (A SIDE)

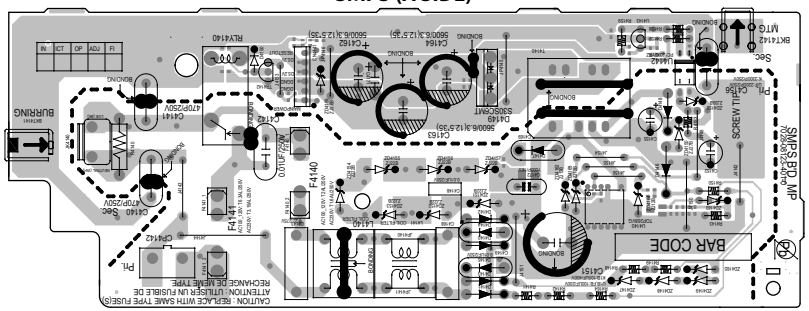

SMPS (B SIDE)

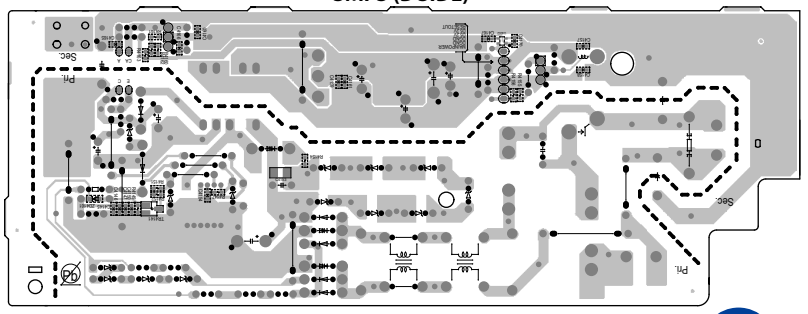

FRONT ch

NR1508
LEVEL DIAGRAM
FRONT ch

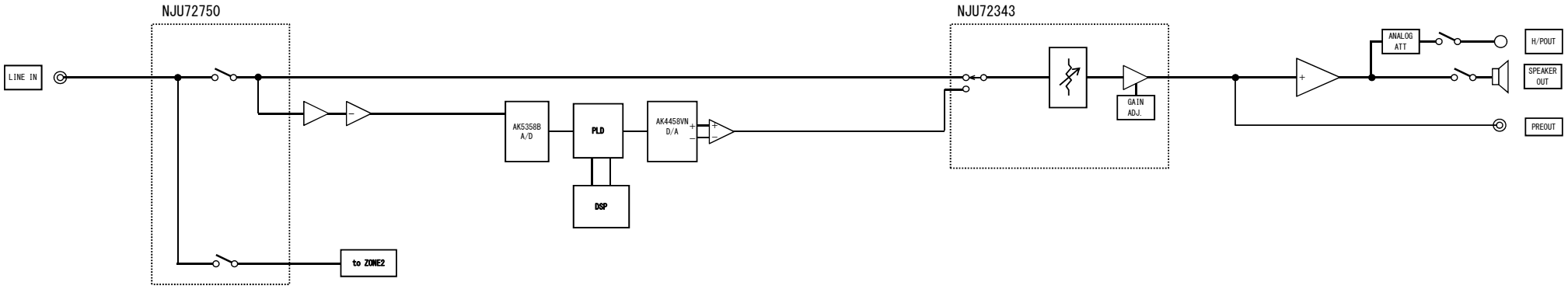

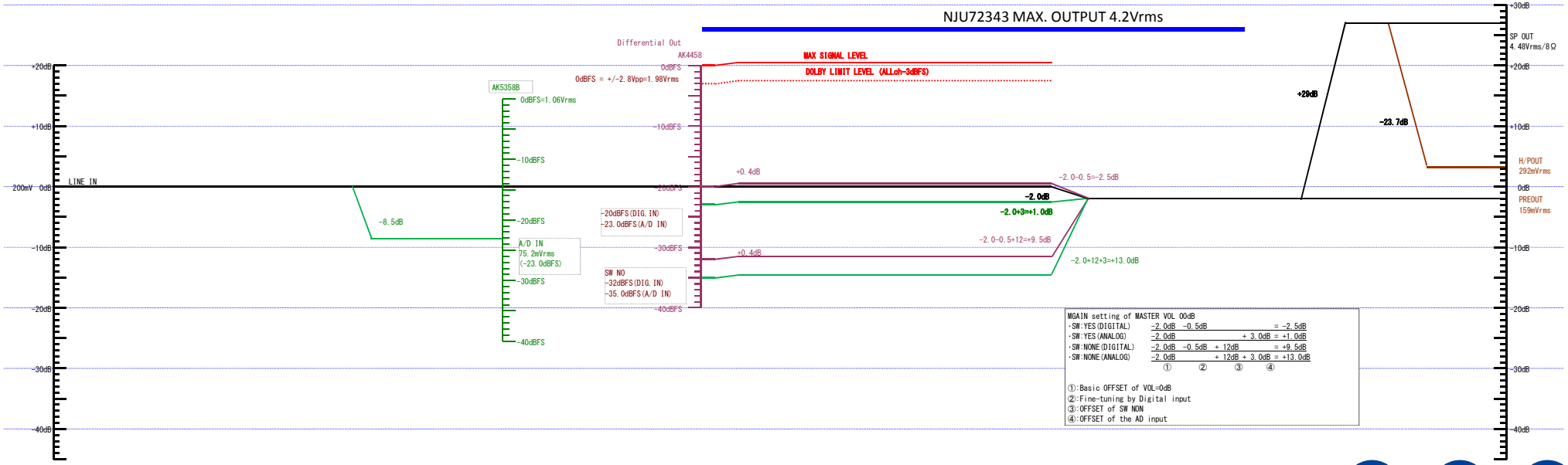

NR1508
LEVEL DIAGRAM
CENTER ch
SURROUND ch
SURR.BCK ch

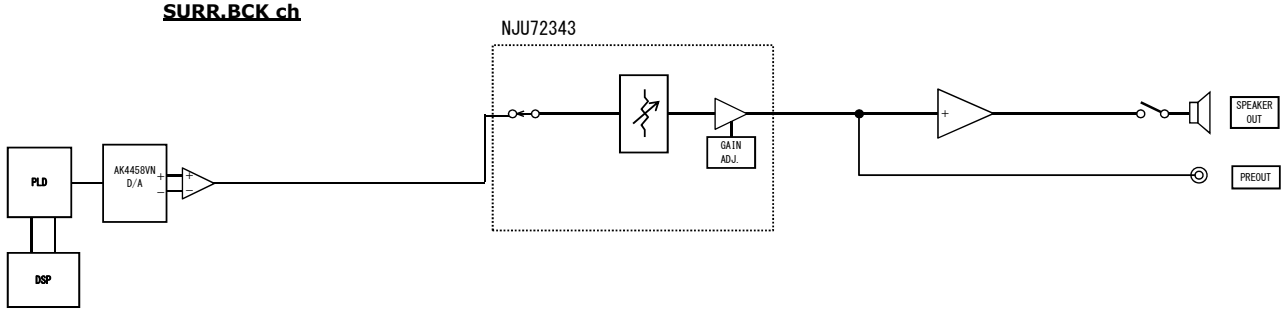

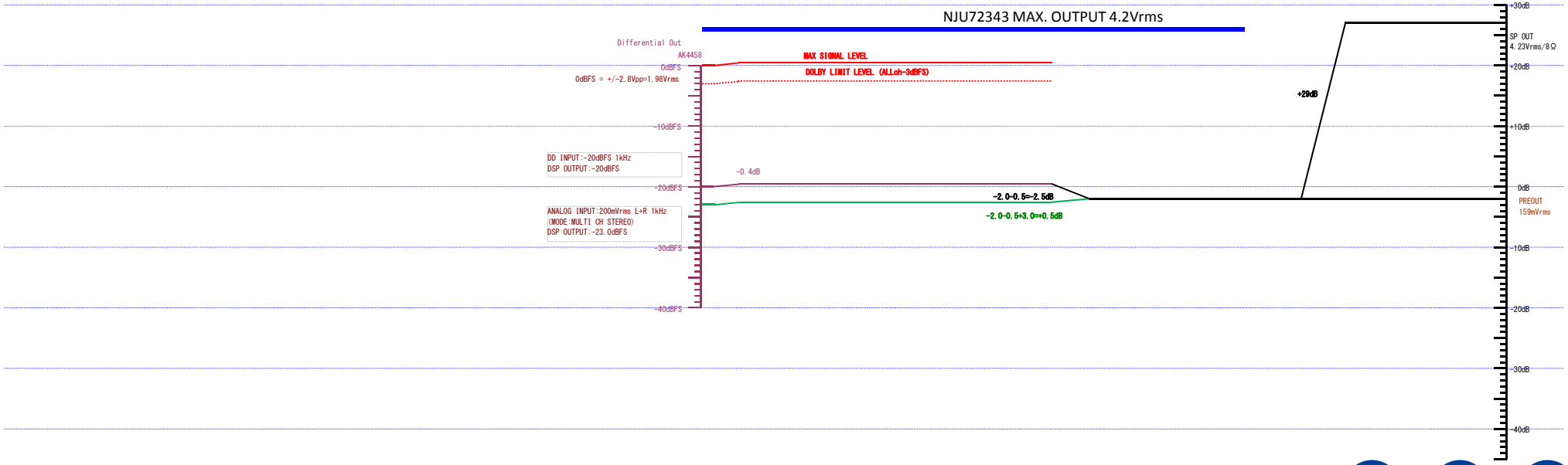

NR1508
LEVEL DIAGRAM
SUBWOOFER ch

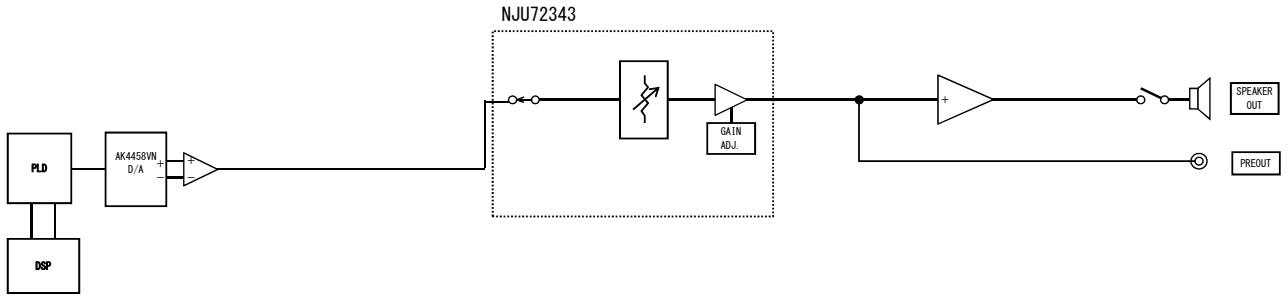

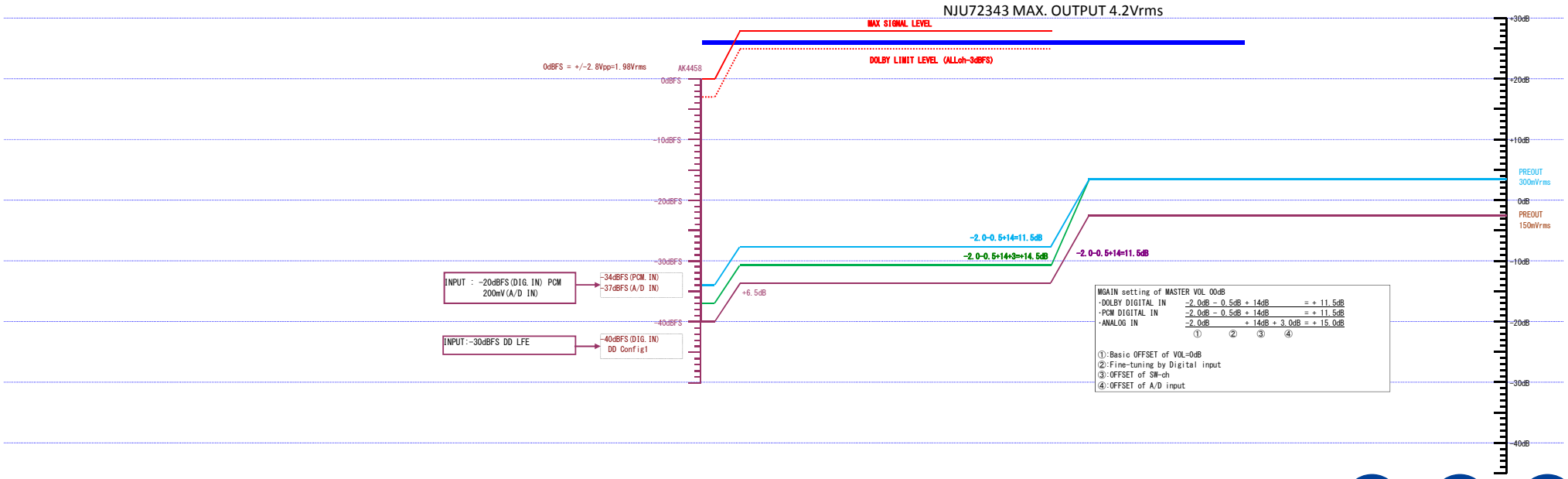

NR1508
LEVEL DIAGRAM
SURROUND ch

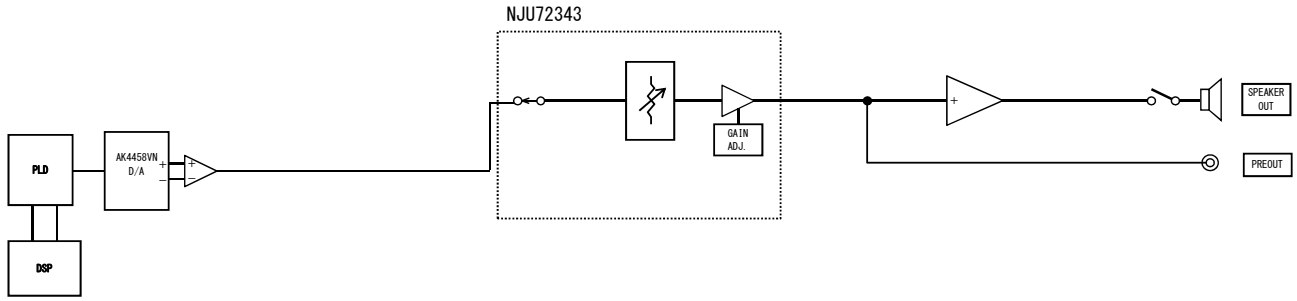

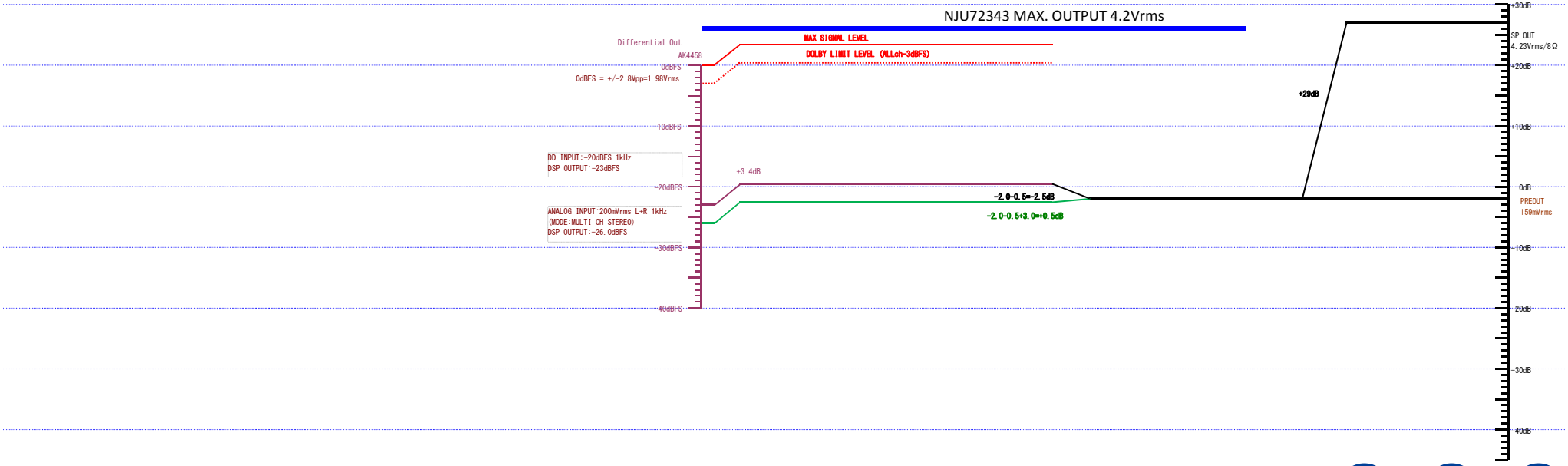

NR1508
LEVEL DIAGRAM
ZONE2(LEGO)

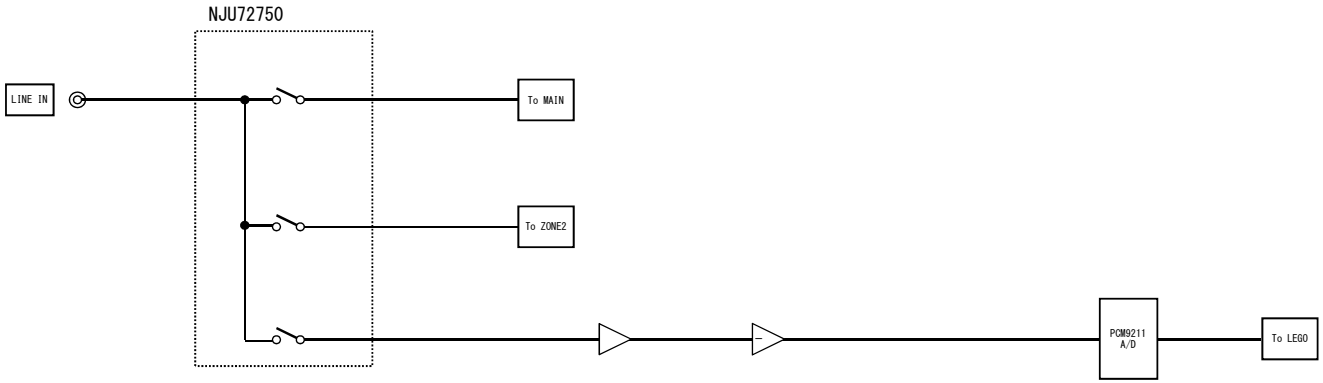

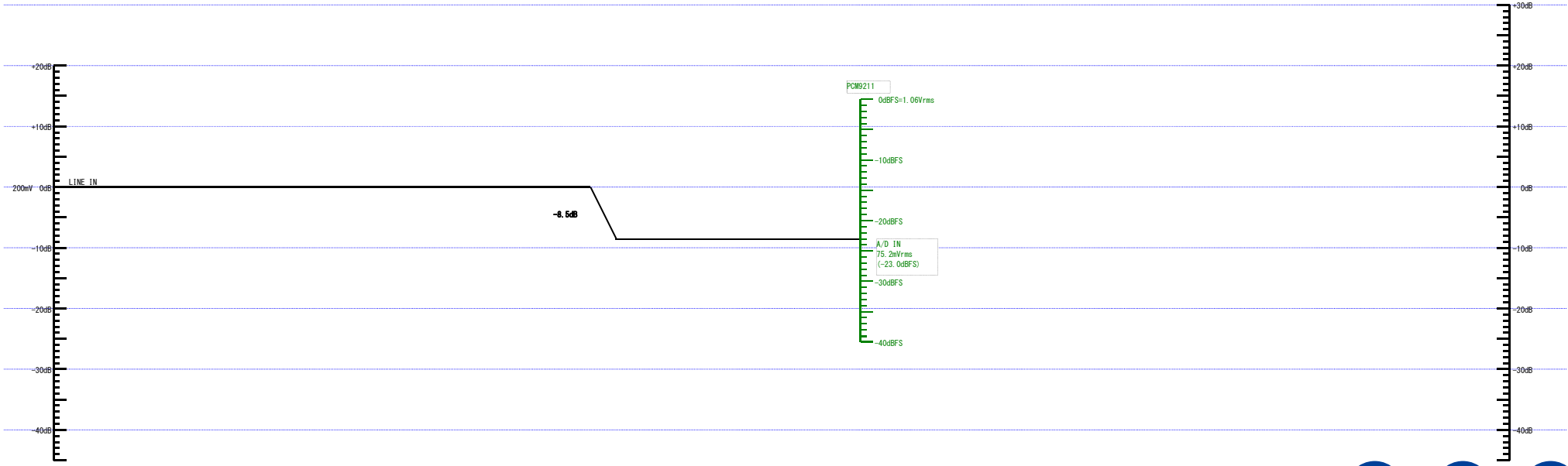

ANALOG AUDIO DIAGRAM

NR1508 ANALOG AUDIO DIAGRAM

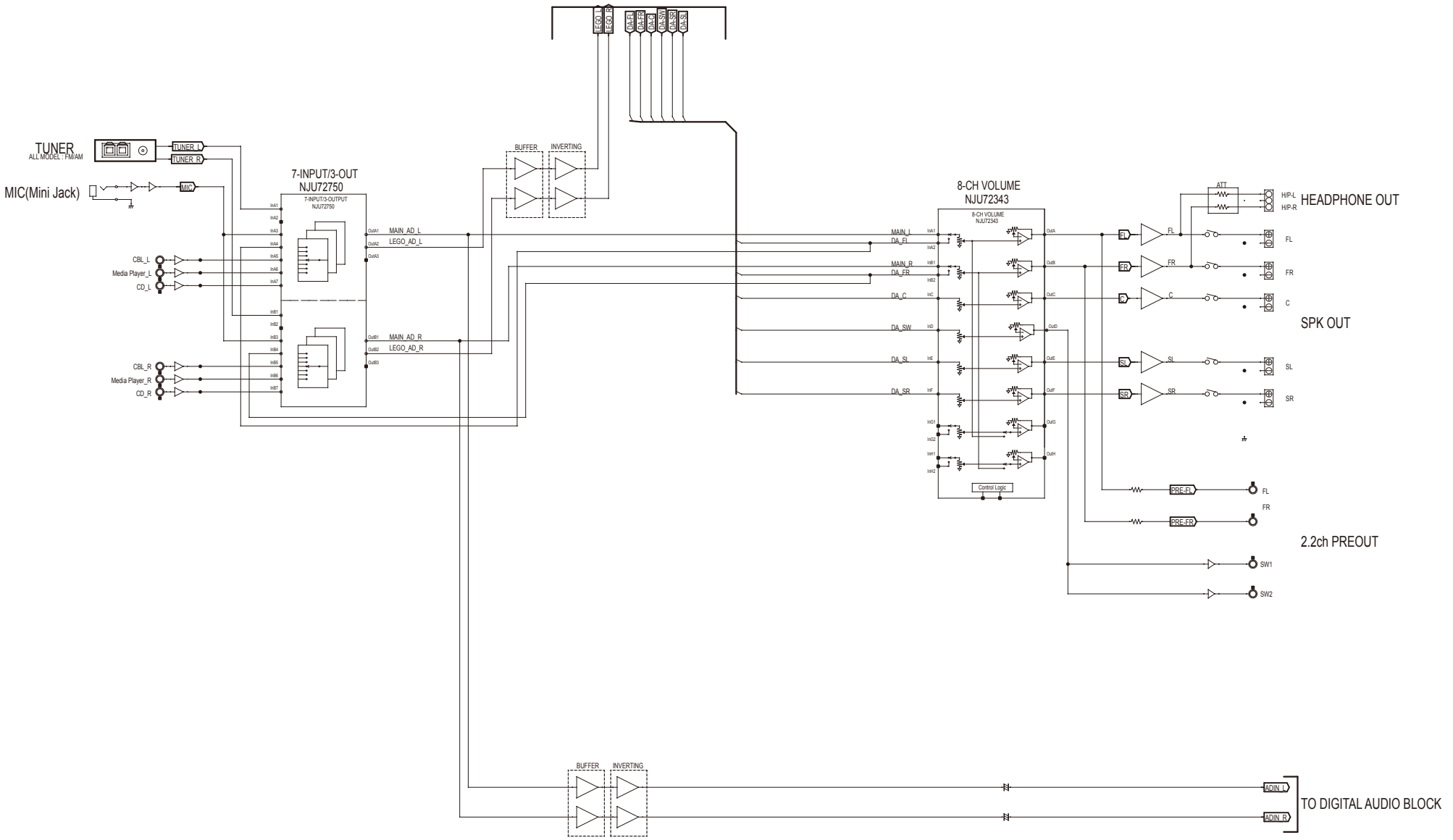

NR1508 DIGITAL AUDIO DIAGRAM

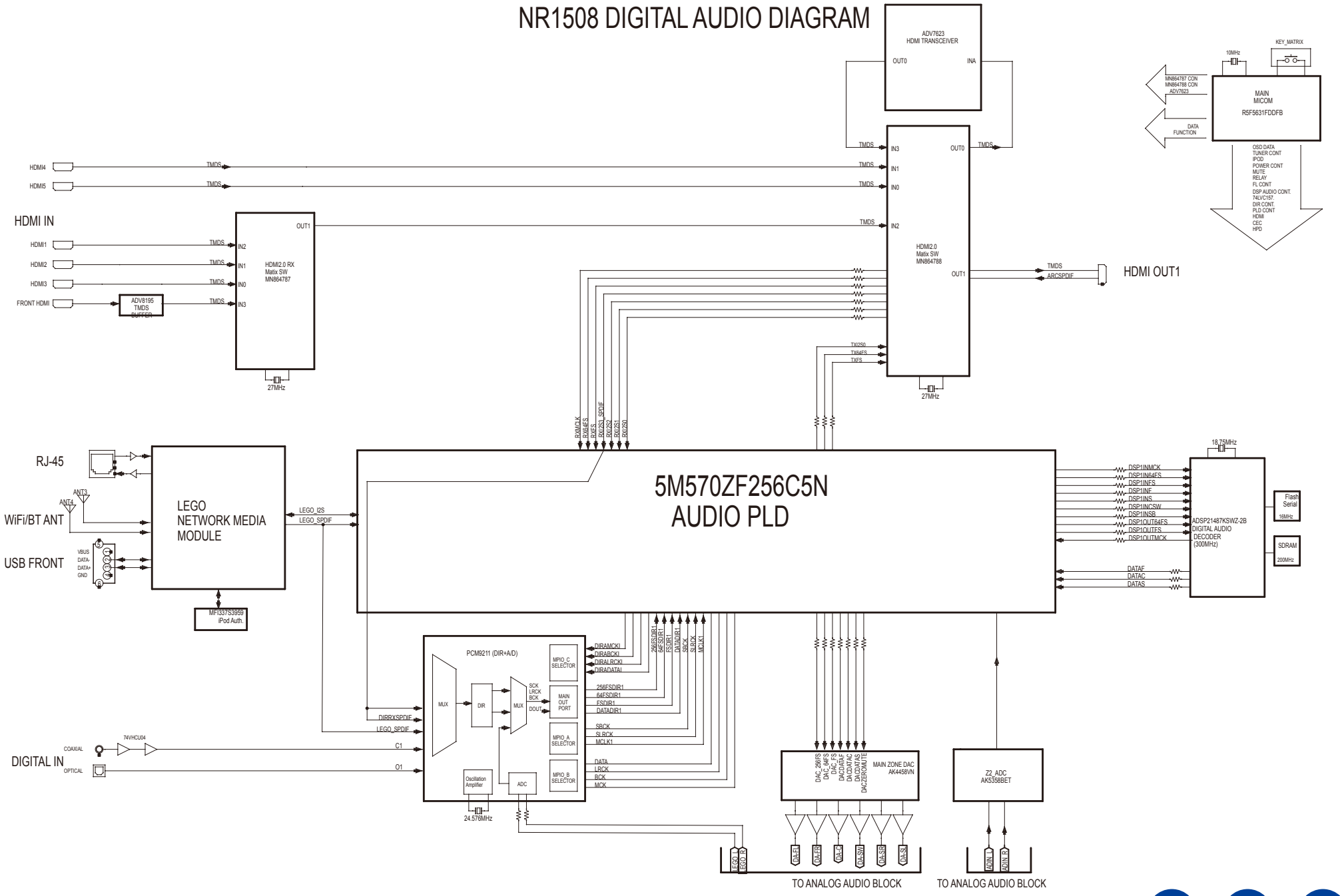

NR1508 VIDEO DIAGRAM

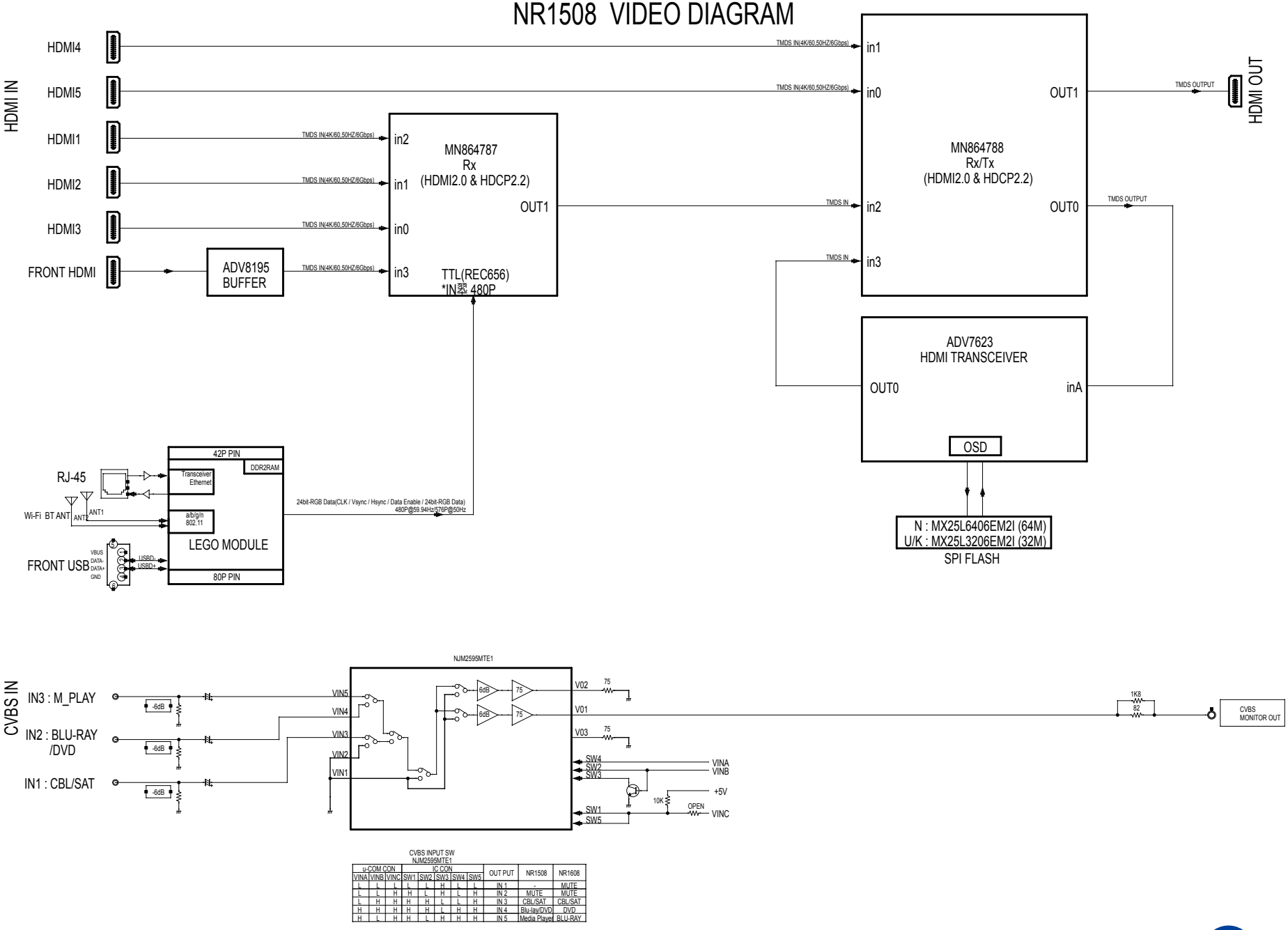

CVBS INPUT SW
NJM2595MTE1

u-COM CON			IC CON					OUT PUT	NR1508	NR1608
VINA	VINB	VINC	SW1	SW2	SW3	SW4	SW5			
L	L	L	L	L	H	L	L	IN 1		MUTE
L	L	H	H	L	H	L	H	IN 2	MUTE	MUTE
L	H	H	H	H	L	L	H	IN 3	CBL/SAT	CBL/SAT
H	H	H	H	H	L	H	H	IN 4	Blu-lay/DVD	DVD
H	L	H	H	L	H	H	H	IN 5	Media Player	BLU-RAY

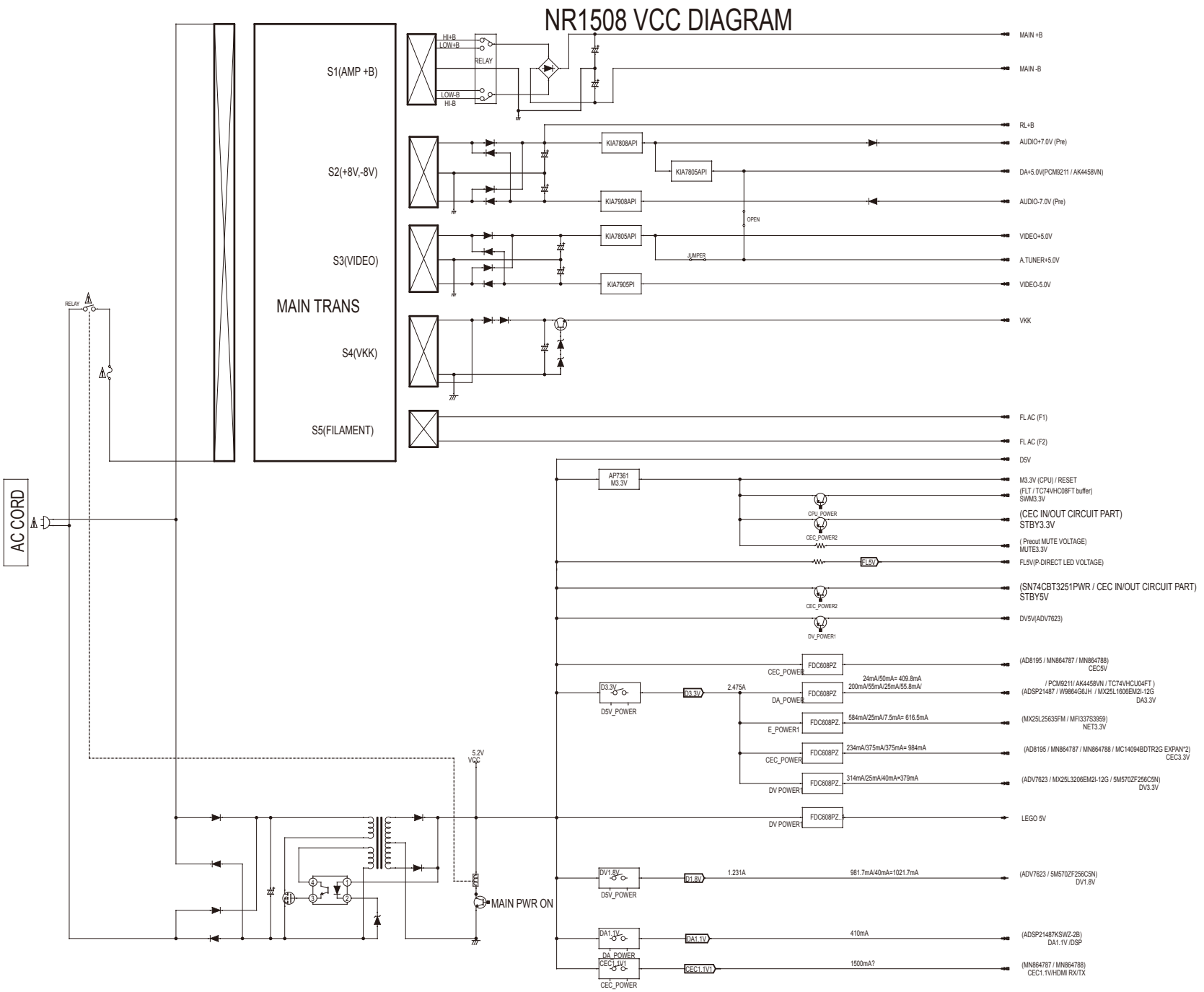
NR1508 VCC DIAGRAM
S1(AMP +B)
S2(+8V,-8V)
S3(VIDEO)
MAIN TRANS
S4(VKK)
S5(FILAMENT)
AC CORD
RELAY
HI+B
LOW+B
LOW-B
HI-B
MAIN +B
MAIN -B
RL+B
KIA7808API
KIA7805API
KIA7908API
KIA7805API
KIA7905PI
OPEN
JUMPER
AUDIO+7.0V (Pre)
DA+5.0V(PCM9211 / AK4458VN)
AUDIO-7.0V (Pre)
VIDEO+5.0V
A.TUNER+5.0V
VIDEO-5.0V
VKK
FL AC (F1)
FL AC (F2)
D5V
AP7361
M3.3V
M3.3V (CPU) / RESET
(FLT / TC74VHC08FT buffer)
SWM3.3V
CPU_POWER
CEC_POWER2
(CEC IN/OUT CIRCUIT PART)
STBY3.3V
(Precut MUTE VOLTAGE)
MUTE3.3V
FL5V
FL5V(P-DIRECT LED VOLTAGE)
(SN74CBT3251PWR / CEC IN/OUT CIRCUIT PART)
STBY5V
DV5V(ADV7623)
DV_POWER1
FDC608PZ
CEC_POWER
(AD8195 / MN864787 / MN864788)
CEC5V
D3.3V
D5V_POWER
2.475A
24mA/50mA= 409.8mA
200mA/55mA/25mA/55.8mA/
/ PCM9211/ AK4458VN / TC74VHCU04FT)
(ADSP21487 / W9864G6JH / MX25L1606EM2I-12G
DA3.3V
DA_POWER
584mA/25mA/7.5mA= 616.5mA
(MX25L25635FM / MFI337S3959)
NET3.3V
E_POWER1
234mA/375mA/375mA= 984mA
(AD8195 / MN864787 / MN864788 / MC14094BDTR2G EXPAN*2)
CEC3.3V
314mA/25mA/40mA=379mA
(ADV7623 / MX25L3206EM2I-12G / 5M570ZF256C5N)
DV3.3V
DV POWER1
LEGO 5V
5.2V
VCC
MAIN PWR ON
DV1.8V
D1.8V
1.231A
981.7mA/40mA=1021.7mA
(ADV7623 / 5M570ZF256C5N)
DV1.8V
DA1.1V
DA_POWER
410mA
(ADSP21487KSWZ-2B)
DA1.1V /DSP
CEC1.1V1
1500mA?
(MN864787 / MN864788)
CEC1.1V/HDMI RX/TX

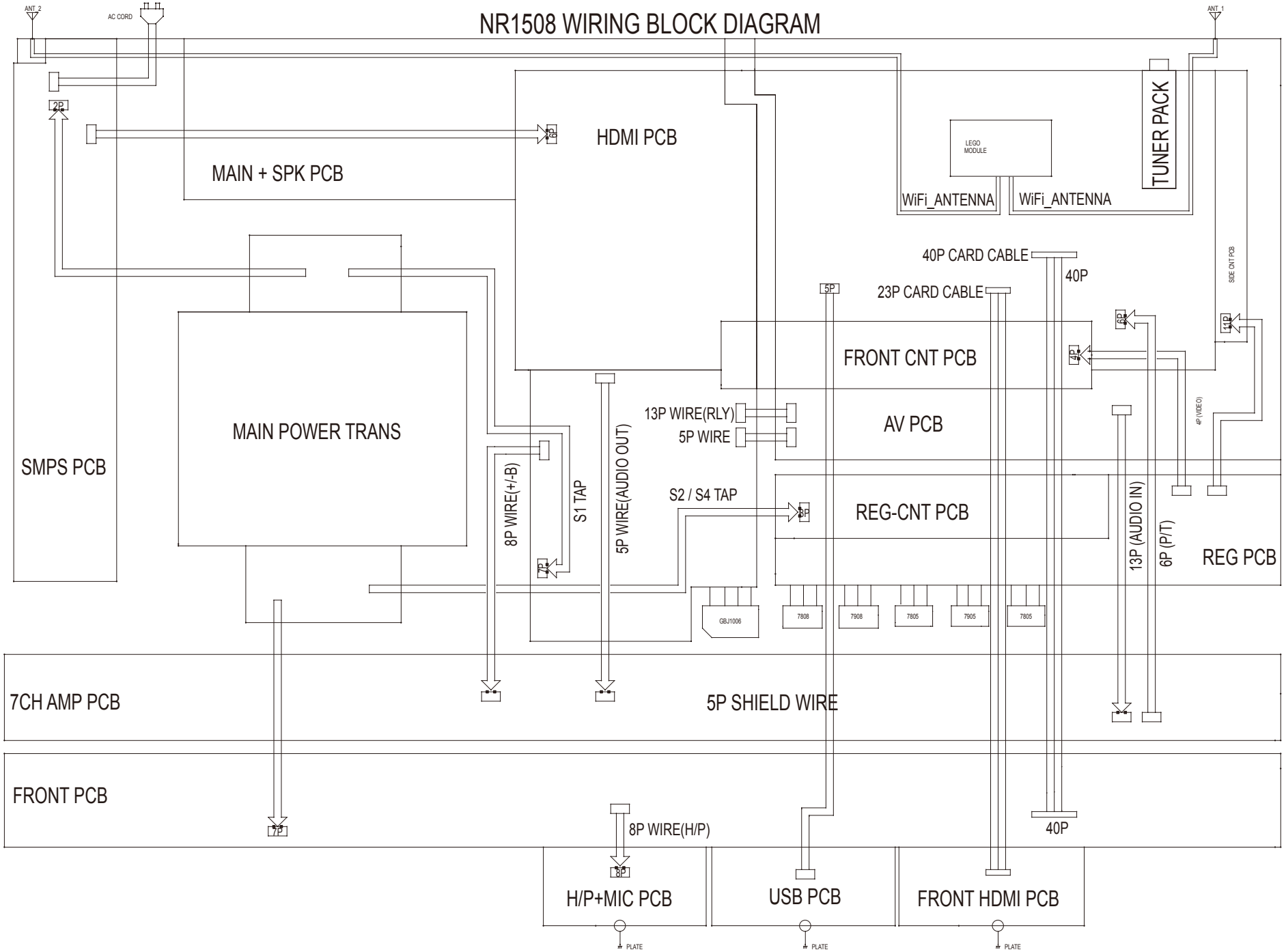
NR1508 WIRING BLOCK DIAGRAM
ANT 2
AC CORD
ANT 1
2P
HDMI PCB
MAIN + SPK PCB
LEGO MODULE
TUNER PACK
WiFi_ANTENNA
WiFi_ANTENNA
40P CARD CABLE
40P
23P CARD CABLE
5P
FRONT CNT PCB
SIDE CNT PCB
MAIN POWER TRANS
13P WIRE(RLY)
5P WIRE
AV PCB
4P (VIDEO)
SMPS PCB
8P WIRE(+/-B)
S1 TAP
5P WIRE(AUDIO OUT)
S2 / S4 TAP
REG-CNT PCB
13P (AUDIO IN)
6P (P/T)
REG PCB
GBJ1006
7808
7908
7805
7905
7805
7CH AMP PCB
5P SHIELD WIRE
FRONT PCB
8P WIRE(H/P)
40P
H/P+MIC PCB
USB PCB
FRONT HDMI PCB
PLATE
PLATE
PLATE

SEMICONDUCTORS

Only major semiconductors are shown, general semiconductors etc. are omitted to list.
The semiconductor which described a detailed drawing in a schematic diagram are omitted to list.

1. IC's

R5F5631FDDFB(DIGITAL_MCU : IC751)

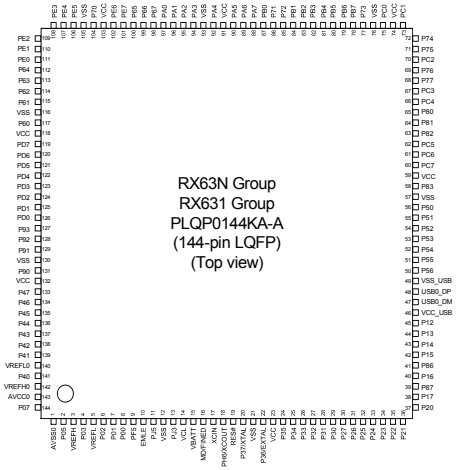

Terminal Functions

Pin	Pin Name	Symbol	I/O	Pu/Pd	STBY	STOP	CEC STBY	Function
1	AVSS0	AVSS	-		-	-	-	Ground pin
2	P05/IRQ13	POWER_KEY	I	M3VPu	I	I	I	Detect Power switch (Release from Wait Mode,Set to interrupt)
3	VREFH	VREFH	-		-	-	-	Reference power supply pin
4	P03/IRQ11	RED_LED	O		L/H	L	H	POWER/STANDBY LED control pin
5	VREFL	VREL	-		-	-	-	Ground pin
6	P02/IRQ10/AN020	DIRECT_LED	O		L	L	L	DIRECT LED Control pin
7	P01/RXD6/IRQ9/ AN019	RXD_MI232O	I	Pd	I	I	I	External data input port (for AMX/FW update via 232C) :Connector is FFC
8	P00/TXD6/IRQ8/ AN018	TXD_MO232I	O		L	L	L	External data output port (for AMX/FW update via 232C) :Connector is FFC
9	PF5/IRQ4	WHITE_ LED(X1400(NA)/ GREEN_ LED(X1400(AP/ CH))/S730)	O		L	L	L	POWER LED control pin
10	EMLE	EMLE	I	Pd	-	-	-	E20 Emulator control pin (On chip Emulator is used,this pin should be High. Not used,it should be Low)
11	PJ5	VSEL_A	I	SW3VPu	I	I	I	Master volume (Rotary encoder) signal input pin
12	VSS	VSS	-		-	-	-	Ground pin
13	PJ3	VSEL_B	I	SW3VPu	I	I	I	Master volume (Rotary encoder) signal input pin
14	VCL	VCL	I		-	-	-	Smoothing capacitor connection pin
15	VBATT	VBATT	-		-	-	-	Power supply pin
16	MD/FINED	MD	I	M3VPu	I	I	I	Pins for setting the operating mode(select the Boot Mode or User Boot Mode,Single Chip Mode)
17	XCIN	XCIN	I	Pd	-	-	-	NC(Pull down)
18	XCOUT	XCOUT	I		-	-	-	NC(open)
19	RES#	RESET	I	M3VPu	-	-	-	Reset signal input pin
20	XTAL/P37	XTAL	I		-	-	-	Pins for a crystal resonator (Xin=10MHz × 10)
21	VSS	VSS	-		-	-	-	Ground pin
22	EXTAL/P36	EXTAL	-		-	-	-	Pins for a crystal resonator (Xin=10MHz × 10)
23	VCC	VCC	-		-	-	-	Power supply pin.
24	P35(IN)/NMI	DSP_FLAG0	I	Pd	L	L	L	DSP(ADI) interrupt signal input pin
25	TRST#/P34/IRQ4	TRST#/ NC(NORMRAL)	I/I	Pd	I/I	I/I	I/I	E20 Emulator control pin/When normal operating mode,set to input.
26	P33/TIOCD0/RXD6/ RXD0/IRQ3-DS	RC_IN	I	M3VPu	I	I	I	Remote input
27	P32/TXD6/TXD0/ IRQ2-DS	BDOWN	I	M3VPu	I	I	I	Detect power down
28	TMS/P31/IRQ1-DS	TMS/ NC(NORMRAL)	I/I	M3VPu	-/I	-/I	I	E20 Emulator control pin/When normal operating mode,set to input.
29	TDI/P30/RXD1/ IRQ0-DS	TDI/RXD_MIT-SUBISHI	I/O/I	M3VPu	-/-/I	-/-/I	I	E20 Emulator control pin/Mitsubishi writter control pin/ When normal operating mode,set to input.
30	TCK/FINEC/P27	TCK/ NC(NORMRAL)	I/I/I	M3VPu	-/-/I	-/-/I	I	E20 Emulator control pin//When normal operating mode,set to input.
31	TDO/P26/TXD1	TDO/TXD_ MITSUBISHI	O/O/I	M3VPu	-/-/I	-/-/I	I	E20 Emulator control pin/Mitsubishi writter control pin/ When normal operating mode,set to input.
32	P25/RXD3	TU_IIC/RDSI	O		L	L	L	TUNER control
33	P24	MVOL_MUTE	O		L	L	L	Volume control pin (NJU72343)
34	P23/TXD3	E_RTS_MOEI	O	Pd (BCM58305 Internal Pd)	L	L	L	Ethernet(LEGO) control pin
35	P22/SCK0	E_CTS_MIEO	I	Pd (BCM58305 Internal Pd)	I	I	I	Ethernet(LEGO) control pin
36	P21/RXD0/IRQ9	E_RXD_MIEO	I	Pd (BCM58305 Internal Pd)	I	L	I	Ethernet(LEGO) control pin
37	P20/TXD0/IRQ8	E_TXD_MOEI	O	Pd (BCM58305 Internal Pd)	L	L	L	Ethernet(LEGO) control pin
38	P17/TXD3/IRQ7	NET_FACT_ RST	O(ODR)	Pu (BCM58305 Internal Pu)	Z	Z	Z	Ethernet(LEGO) control pin
39	P87	7623_ROM_ HOLD	O		L	L	L	Flash ROM for GUI control pin
40	P16/TXD1/RXD3/ IRQ6	NET5V_POW-ER	O		L	L	L	Ethernet power supply (Net5V) control pin/
41	P86	NC	O		L	L	L	
42	P15/RXD1/IRQ5	VEXP_STB	O		L	L	L	Expander (MC14094) control pin
43	P14/IRQ4	VEXP_OE	O		L	L	L	Expander (MC14094) control pin
44	P13/TXD2/IRQ3	VEXP_CLK	O		L	L	L	Expander (MC14094) control pin
45	P12/RXD2/IRQ2	VEXP_DATA	O		L	L	L	Expander (MC14094) control pin
46	VCC_USB	VCC_USB	-		-	-	-	Power supply pin
47	USB0_DM	USB0_DM	-		-	-	-	NC(open)
48	USB0_DP	USB0_DP	-		-	-	-	NC(open)
49	VSS_USB	VSS_USB	-		-	-	-	Ground pin
50	P56	TU_LA	O		L	L	L	TUNER control pin
51	P55/IRQ10	TU_DA	I_O	SW3VPu	L	L	L	TUNER control
52	P54	TU_CK	O	SW3VPu	L	L	L	TUNER control
53	BCLK/P53	THERMAL_E	I	SW3VPu	I	L	I	PROTECTION Detection pin(Heat Sink)
54	P52/RXD2	ADV7623_ SPI_MI	I		L	L	L	HDMI transceiver w/ GUI(ADV7623) control pin (for GUI)
55	P51/SCK2	ADV7623_ SPI_CLK	O		L	L	L	HDMI transceiver w/ GUI(ADV7623) control pin (for GUI)
56	P50/TXD2	ADV7623_ SPI_MO	O		L	L	L	HDMI transceiver w/ GUI(ADV7623) control pin (for GUI)
57	VSS	VSS	-		-	-	-	Ground pin
58	P83	ADV7623_RST	O	Pd	L	L	L	HDMI transceiver w/ GUI(ADV7623) reset control pin
59	VCC	VCC	-		-	-	-	Power supply pin.

Pin	Pin Name	Symbol	I/O	Pu/Pd	STBY	STOP	CEC STBY	Function
60	PC7/TXD8/IRQ14	UB	I	Pd	-	-	-	Pins for setting the boot mode(select the Boot Mode or User Boot Mode)
61	PC6/RXD8/IRQ13	HSCL_(400k)	O	DV3VPu	L	L	L	HDMI transceiver w/ GUI(ADV7623) control pin (for HDMI)
62	PC5	HSDA_(400k)	I_O	DV3VPu	L	L	L	HDMI transceiver w/ GUI(ADV7623) control pin (for HDMI)
63	P82/TXD10	DSP_MOSI	O	DA3VPu	L	L	L	DSP(ADI) control pin
64	P81/RXD10	DSP_MISO	I	DA3VPu	L	L	L	DSP(ADI) control pin
65	P80/SCK10	DSPI_CLK	O	DA3VPu	L	L	L	DSP(ADI) control pin
66	PC4	DSP_ICS	O	DA3VPu	L	L	L	DSP(ADI) control pin
67	PC3/TXD5	M-DAX_LED	O		L	L	L	M-DAX LED Control pin
68	P77/TXD11	DSP_RST	O		L	L	L	DSP(ADI) reset control pin
69	P76/RXD11	SEL_DATA	O		L	L	L	Audio selector control pin for NJU72750
70	PC2/RXD5	DA_POWER	O		L	L	L	Digital audio power supply (DA3.3V,DA1.2V) control pin
71	P75	CEC_POWER2	O		L	L	H	CEC standby power control (for CEC Standby Mode 3)
72	P74	ADV7623_ SPI_CS	O		L	L	L	HDMI transceiver w/ GUI(ADV7623) control pin (for GUI)
73	PC1/IRQ12	DAC_PLD_ERR	I		L	L	L	Detect DAC/PLD error (from Audio PLD and DAC)
74	VCC	VCC	-		-	-	-	Power supply pin.
75	PC0/IRQ14	H/P_RL	O		L	L	L	Headphone relay control pin
76	VSS	VSS	-		-	-	-	Ground pin
77	P73	FRONT_RL	O		L	L	L	Speaker relay control pin
78	PB7/TXD9	PSDA	I/O	CEC3VPu	O/L	L	L	HDMI I2C (MN864788/787) control pin
79	PB6/RXD9	PSCL	I/O	CEC3VPu	O/L	L	L	HDMI I2C (MN864788/787) control pin
80	PB5	SEL_CLK	O		L	L	L	Audio selector control pin for NJU72750
81	PB4	APLD_CS	O/O		L	L	L	Audio PLD (5M570ZF256C5N) control pin
82	PB3	APLD_DATA/ DAC_DATA	O/O		L	L	L	Audio PLD (5M570ZF256C5N) control pin/DAC (AK4458VN) control pin
83	PB2	APLD_CLK/ DAC_CLK	O/O		L	L	L	Audio PLD (5M570ZF256C5N) control pin/DAC (AK4458VN) control pin
84	PB1/TXD4/TXD6/ IRQ4-DS	DAC_MS	O		L	L	L	DAC (AK4458VN) control pin
85	P72	DAC_RST	O		L	L	L	DAC (AK4458VN) control pin
86	P71	PRE_MUTE	O		L	L	L	MUTE for preout control pin
87	PB0/RXD4/RXD6/ IRQ12	KILL_IR	O		L	L	L	Front IR Disable Control pin (Mz)
88	PA7	ISEL_A	I	SW3VPu	I	I	I	Input selector (Rotary encoder) signal input pin
89	PA6	ISEL_B	I	SW3VPu	I	I	I	Input selector (Rotary encoder) signal input pin
90	PA5	C/S_RL	O		L	L	L	Speaker relay control pin
91	VCC	VCC	-		-	-	-	Power supply pin.
92	PA4/TXD5/IRQ5-DS	RC_OUT	O		H	L	H	RC-5 output pin
93	VSS	VSS	-		-	-	-	Ground pin
94	PA3/RXD5/IRQ6-DS	MVOL_DATA	O		L	L	L	Volume control pin (NJU72343)
95	PA2/RXD5	MVOL_CLK	O		L	L	L	Volume control pin (NJU72343)
96	PA1/MTIOC0B/ IRQ11	FLASHER_ IN(NA Only)/ NC(Except NA)	I/O	Pd/-	I/L	I/L	I/L	FLASHER input pin(Use TIMER) (WAKEUP at interrupt at STANDBY)
97	PA0	H5V_DET	I		I	I	I	HDMI IN 5V detect signal pin
98	P67/IRQ15	FL_CE	O		L	L	L	FL display control pin
99	P66	FL_DATA	O		L	L	L	FL display control pin
100	P65	FL_CLK	O		L	L	L	FL display control pin
101	PE7/IRQ7/AN5	KEY3	I	M3VPu	I	I	I	Key control signalinput pin (When standby mode,set to inturrupt)
102	PE6/IRQ6/AN4	KEY2	I	M3VPu	I	I	I	Key control signalinput pin (When standby mode,set to inturrupt)
103	VCC	VCC	-		-	-	-	Power supply pin.
104	P70	Hi-B_RL	O		L	L	L	HIGH-B relay control pin
105	VSS	VSS	-		-	-	-	Ground pin
106	PE5/IRQ5/AN3	KEY1	I	M3VPu	I	I	I	Key control signalinput pin (When standby mode,set to inturrupt)

Pin	Pin Name	Symbol	I/O	Pu/Pd	STBY	STOP	CEC STBY	Function
107	PE4/AN2	DC_DET/ASO	I	SW3VPu	I	I	I	Protection detect signal input pin (for DC and ASO) (A/D converter)
108	PE3/AN1	AMPSIGDET	I	Pd	I	L	I	Signal level monitor pin (AD converter)
109	PE2/RXD12/IRQ7-DS/AN0	CURRENT_DET	I	Pd	I	L	I	Current level monitor pin (A/D converter)
110	PE1/TXD12	GUI_WRITE	O		L	L	L	GUI flash rom writing control
111	PE0	NET3.3V_ POWER	O		L	L	L	Ethernet power supply control(Net3.3V)
112	P64	D5V_POWER	O		L	L	H	Digital 5V power supply control pin(3.3V and 1.8V generate from 5V)
113	P63	CEC_POWER	O		L	L	-	CEC standby power supply control(CEC5V,CEC3.3V,CEC1.8V)
114	P62	DV_POWER1	O		L	L	-	Digital video power supply (DV5V,DV3.3V) control pin
115	P61	DIR_DOUT	I	DA3VPu	I	I	I	DIR (PCM9211) control pin
116	VSS	VSS	-		-	-	-	Ground pin
117	P60	DIR_DIN	O		L	L	L	DIR (PCM9211) control pin
118	VCC	VCC	-		-	-	-	Power supply pin.
119	PD7/IRQ7/AN7	H/P_DET/ MIC_DET	I	SW3VPu	I	I	I	Headphone insert detect pin/Microphone insert detect pin (A/D converter)
120	PD6/IRQ6/AN6	MODE	I		I	I	I	Region setting pin
121	PD5/IRQ5/AN013	MN864787_ RST	O	Pd	L	L	L	HDMI Rx (MN864787) reset control pin
122	PD4/IRQ4/AN012	DIR_RST	O		L	L	L	DIR (PCM9211) control pin
123	PD3/IRQ3/AN011	MN864788_ HINT	I	CEC3VPu	I	I	I	HDMI Tx (MN864788) interrupt signal input pin
124	PD2/IRQ2/AN010	MN864787_ HINT	I	CEC3VPu	I	I	I	HDMI Rx (MN864787) interrupt signal det
125	PD1/IRQ1/AN009	TU_IISD	I		L	L	L	TUNER control pin
126	PD0/TIOCA7/IRQ0/ AN008	CEC_IN	I	ST-BY3VPu	I	I	I	CEC-D control pin
127	P93/AN017	THERMAL_A	I	SW3VPu	I	L	I	Protection detect signal input pin
128	P92/RXD7/AN016	THERMAL_B	I	SW3VPu	I	L	I	Protection detect signal input pin
129	P91/AN015	NC	O		L	L	L	NC
130	VSS	VSS	-		-	-	-	Ground pin
131	P90/TXD7/AN014	MN864788_ RST	O	Pd	L	L	L	HDMI Tx (MN864788) reset control pin
132	VCC	VCC	-		-	-	-	Power supply pin.
133	P47/IRQ15-DS/ AN007	FL_RST	O		L	L	L	FL display control pin
134	P46/IRQ14-DS/ AN006	DIR_CE	O		L	L	L	DIR (PCM9211) control pin
135	P45/IRQ13-DS/ AN005	DIR_CLK	O		L	L	L	DIR (PCM9211) control pin
136	P44/IRQ12-DS/ AN004	AIOS4_STBY_ STATUS	I	Pd	I	I	I	Not used (This port use to detect for LEGO standby status in the future (Low : normal, High : Deep Standby))
137	P43/IRQ11-DS/ AN003	AIOS4_WAKE-UP	O		L	L	L	same as NET5V_POWER,NET3.3V_POWER (This port use to control for LEGO standby mode in the future(Low : Deep Standby, High : normal))
138	P42/IRQ10-DS/ AN002	CPU_POWER	O		L	L	L	CPU power supply control pin
139	P41/IRQ9-DS/ AN001	MAIN_POWER	O		L	L	L	Power supply control pin
140	VREFL0	VREFL0	-		-	-	-	Ground pin
141	P40/IRQ8-DS/ AN000	MN864788_ HAINT	I	CEC3VPu	I	I	I	HDMI Tx (MN864788) interrupt signal input pin(for Audio)
142	VREFH0	VREFH0	-		-	-	-	Power supply pin
143	AVCC0	AVCC0	-		-	-	-	Power supply pin
144	P07/IRQ15	CEC_OUT	O		L	L	-	CEC-D control pin

AD8195ACPZ (AV : U3000)

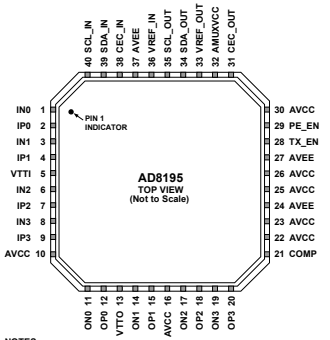

NOTES
1. THE AD8195 LFCSP HAS AN EXPOSED PAD ON THE UNDERSIDE OF THE PACKAGE THAT AIDS IN HEAT DISSIPATION. THE PAD MUST BE ELECTRICALLY CONNECTED TO THE AVEE SUPPLY PLANE IN ORDER TO MEET THERMAL SPECIFICATIONS.

07646-003

AD8195ACPZ Terminl Function

Pin No.	Mnemonic	Type[1]	Description
1	IN0	HS I	High Speed Input Complement.
2	IP0	HS I	High Speed Input.
3	IN1	HS I	High Speed Input Complement.
4	IP1	HS I	High Speed Input.
5	VTTI	Power	Input Termination Supply. Nominally connected to AVCC.
6	IN2	HS I	High Speed Input Complement.
7	IP2	HS I	High Speed Input.
8	IN3	HS I	High Speed Input Complement.
9	IP3	HS I	High Speed Input.
10, 16, 22, 23, 25, 26, 30	AVCC	Power	Positive Analog Supply. 3.3 V nominal.
11	ON0	HS O	High Speed Output Complement.
12	OP0	HS O	High Speed Output.
13	VTTO	Power	Output Termination Supply. Nominally connected to AVCC.
14	ON1	HS O	High Speed Output Complement.
15	OP1	HS O	High Speed Output.
17	ON2	HS O	High Speed Output Complement.
18	OP2	HS O	High Speed Output.
19	ON3	HS O	High Speed Output Complement.
20	OP3	HS O	High Speed Output.
21	COMP	Control	Power-On Compensation Pin. Bypass to ground through a 10 µF capacitor.
24, 27, 37, Exposed Pad	AVEE	Power	Negative Analog Supply. 0 V nominal.
28	TX_EN	Control	High Speed Output Enable Parallel Interface.
29	PE_EN	Control	High Speed Preemphasis Enable Parallel Interface.
31	CEC_OUT	LS I/O	CEC Output Side.
32	AMUXVCC	Power	Positive Auxiliary Buffer Supply. 5 V nominal.

AD8195ACPZ Block diagram

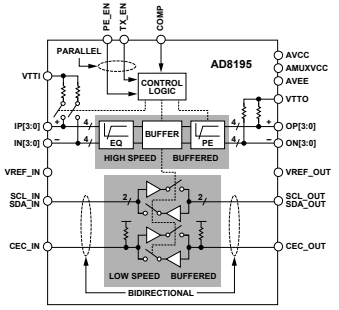

PCM9211 (DIGITAL : U1040)

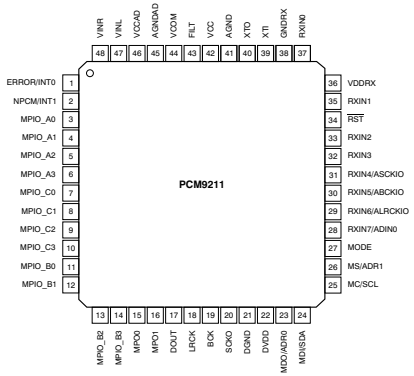

PIN Functions

PIN				DESCRIPTION
NO.	NAME	I/O	5-V TOLERANT	
1	ERROR/INT0	O	No	DIR Error detection output / Interrupt0 output
2	NPCM/INT1	O	No	DIR Non-PCM detection output / Interrupt1 output
3	MPIO_A0	I/O	Yes	Multipurpose I/O, Group A(1)
4	MPIO_A1	I/O	Yes	Multipurpose I/O, Group A(1)
5	MPIO_A2	I/O	Yes	Multipurpose I/O, Group A(1)
6	MPIO_A3	I/O	Yes	Multipurpose I/O, Group A(1)
7	MPIO_C0	I/O	Yes	Multipurpose I/O, Group C(1)
8	MPIO_C1	I/O	Yes	Multipurpose I/O, Group C(1)
9	MPIO_C2	I/O	Yes	Multipurpose I/O, Group C(1)
10	MPIO_C3	I/O	Yes	Multipurpose I/O, Group C(1)
11	MPIO_B0	I/O	Yes	Multipurpose I/O, Group B(1)
12	MPIO_B1	I/O	Yes	Multipurpose I/O, Group B(1)
13	MPIO_B2	I/O	Yes	Multipurpose I/O, Group B(1)
14	MPIO_B3	I/O	Yes	Multipurpose I/O, Group B(1)
15	MPO0	O	No	Multipurpose output 0
16	MPO1	O	No	Multipurpose output 1
17	DOUT	O	No	Main output port, serial digital audio data output
18	LRCK	O	No	Main output port, LR clock output
19	BCK	O	No	Main output port, Bit clock output
20	SCKO	O	No	Main output port, System clock output
21	DGND	–	–	Ground, for digital
22	DVDD	–	–	Power supply, 3.3 V (typ.), for digital
23	MDO/ADR0	I/O	Yes	Software control I/F, SPI data output / I2C slave address setting0(2)
24	MDI/SDA	I/O	Yes	Software control I/F, SPI data input / I2C data input/output(2) (3)
25	MC/SCL	I	Yes	Software control I/F, SPI clock input / I2C clock input(2)

PIN				DESCRIPTION
NO.	NAME	I/O	5-V TOLERANT	
26	MS/ADR1	I	Yes	Software control I/F, SPI chip select / I2C slave address setting1(2)
27	MODE	I	No	Control mode setting, (see the Serial Control Mode section, Control Mode Pin Setting)
28	RXIN7/ADIN0	I	Yes	Biphase signal, input 7 / AUXIN0, serial audio data input(2)
29	RXIN6/ALRCKI0	I	Yes	Biphase signal, input 6 / AUXIN0, LR clock input(2)
30	RXIN5/ABCKI0	I	Yes	Biphase signal, input 5 / AUXIN0, bit clock input(2)
31	RXIN4/ASCKI0	I	Yes	Biphase signal, input 4 / AUXIN0, system clock input(2)
32	RXIN3	I	Yes	Biphase signal, input 3(2)
33	RXIN2	I	Yes	Biphase signal, input 2(2)
34	RST	I	Yes	Reset Input, active low(2) (4)
35	RXIN1	I	Yes	Biphase signal, input 1, built-in coaxial amplifier
36	VDDRX	–	–	Power supply, 3.3 V (typ.), for RXIN0 and RXIN1.
37	RXIN0	I	Yes	Biphase signal, input 0, built-in coaxial amplifier
38	GNDRX	-	-	Ground, for RXIN
39	XTI	I	No	Oscillation circuit input for crystal resonator or external XTI clock source input(5)
40	XTO	O	No	Oscillation circuit output for crystal resonator
41	AGND	–	–	Ground, for PLL analog
42	VCC	–	–	Power supply, 3.3 V (typ.), for PLL analog
43	FILT	O	No	External PLL loop filter connection terminal; must connect recommended filter
44	VCOM	O	No	ADC common voltage output; must connect external decoupling capacitor
45	AGNDAD	–	–	Ground, for ADC analog
46	VCCAD	–	–	Power supply, 5.0 V (typ.), for ADC analog
47	VINL	I	No	ADC analog voltage input, left channel
48	VINR	I	No	ADC analog voltage input, right channel

(1) Schmitt trigger input
(2) Schmitt trigger input
(3) Open-drain configuration in I2C mode
(4) Onboard pull-down resistor (50 k Ω , typical)
(5) CMOS Schmitt trigger input

PCM9211 BLOCK DIAGRAM

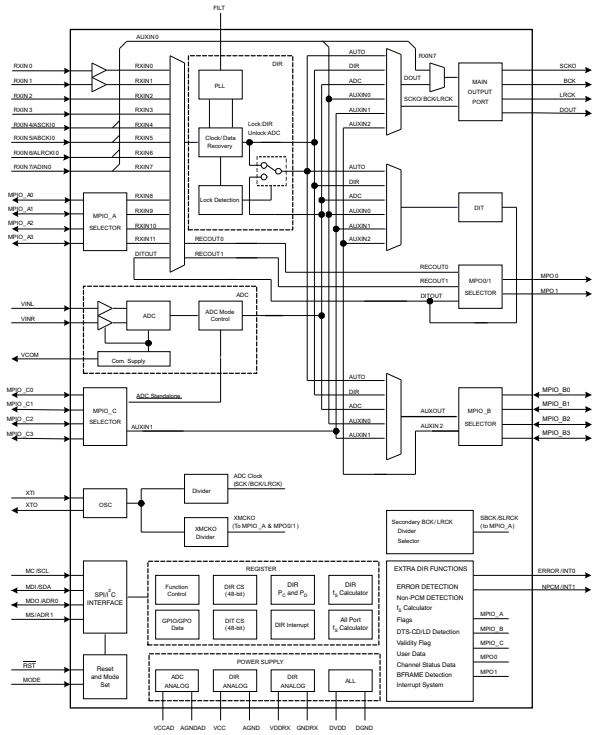

ADSP21487KSWZ-2B (DIGITAL : U1021)

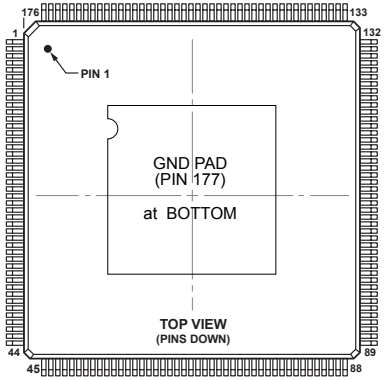

Pin Name	Pin No.	Pin Name	Pin No.	Pin Name	Pin No.	Pin Name	Pin No.
SDDQM	1	V_{DD_EXT}	45	DAI_P10	89	V_{DD_INT}	133
$\overline{MS0}$	2	DPI_P08	46	V_{DD_INT}	90	FLAG0	134
SDCKE	3	DPI_P07	47	V_{DD_EXT}	91	FLAG1	135
V_{DD_INT}	4	V_{DD_INT}	48	DAI_P20	92	FLAG2	136
CLK_CFG1	5	DPI_P09	49	V_{DD_INT}	93	NC	137
ADDR0	6	DPI_P10	50	DAI_P08	94	FLAG3	138
BOOT_CFG0	7	DPI_P11	51	DAI_P14	95	NC	139
V_{DD_EXT}	8	DPI_P12	52	DAI_P04	96	NC	140
ADDR1	9	DPI_P13	53	DAI_P18	97	V_{DD_EXT}	141
ADDR2	10	DPI_P14	54	DAI_P17	98	NC	142
ADDR3	11	DAI_P03	55	DAI_P16	99	V_{DD_INT}	143
ADDR4	12	NC	56	DAI_P12	100	$\overline{TRST}$	144
ADDR5	13	V_{DD_EXT}	57	DAI_P15	101	NC	145
BOOT_CFG1	14	NC	58	V_{DD_INT}	102	$\overline{EMU}$	146
GND	15	NC	59	DAI_P11	103	DATA0	147
ADDR6	16	NC	60	V_{DD_EXT}	104	DATA1	148
ADDR7	17	NC	61	V_{DD_INT}	105	DATA2	149
NC	18	V_{DD_INT}	62	BOOT_CFG2	106	DATA3	150
NC	19	NC	63	V_{DD_INT}	107	TDO	151
ADDR8	20	NC	64	AMI_ACK	108	DATA4	152
ADDR9	21	V_{DD_INT}	65	GND	109	V_{DD_EXT}	153
CLK_CFG0	22	NC	66	THD_M	110	DATA5	154
V_{DD_INT}	23	NC	67	THD_P	111	DATA6	155
CLKIN	24	V_{DD_INT}	68	V_{DD_THD}	112	V_{DD_INT}	156
XTAL	25	NC	69	V_{DD_INT}	113	DATA7	157
ADDR10	26	$\overline{WDTRSTO}$	70	V_{DD_INT}	114	TDI	158
SDA10	27	NC	71	$\overline{MS1}$	115	SDCLK	159
V_{DD_EXT}	28	V_{DD_EXT}	72	V_{DD_INT}	116	V_{DD_EXT}	160
V_{DD_INT}	29	DAI_P07	73	WDT_CLKO	117	DATA8	161
ADDR11	30	DAI_P13	74	WDT_CLKIN	118	DATA9	162
ADDR12	31	DAI_P19	75	V_{DD_EXT}	119	DATA10	163
ADDR17	32	DAI_P01	76	ADDR23	120	TCK	164
ADDR13	33	DAI_P02	77	ADDR22	121	DATA11	165
V_{DD_INT}	34	V_{DD_INT}	78	ADDR21	122	DATA12	166
ADDR18	35	NC	79	V_{DD_INT}	123	DATA14	167
$\overline{RESETOUT/RUNRSTIN}$	36	NC	80	ADDR20	124	DATA13	168
V_{DD_INT}	37	NC	81	ADDR19	125	V_{DD_INT}	169
DPI_P01	38	NC	82	V_{DD_EXT}	126	DATA15	170
DPI_P02	39	NC	83	ADDR16	127	$\overline{SDWE}$	171
DPI_P03	40	V_{DD_EXT}	84	ADDR15	128	$\overline{SDRAS}$	172
V_{DD_INT}	41	V_{DD_INT}	85	V_{DD_INT}	129	$\overline{RESET}$	173
DPI_P05	42	DAI_P06	86	ADDR14	130	TMS	174
DPI_P04	43	DAI_P05	87	$\overline{AMI\_WR}$	131	$\overline{SDCAS}$	175
DPI_P06	44	DAI_P09	88	$\overline{AMI\_RD}$	132	V_{DD_INT}	176
						GND	177*

* at BOTTOM

W9864G6KH-6(DIGITAL : U1020)

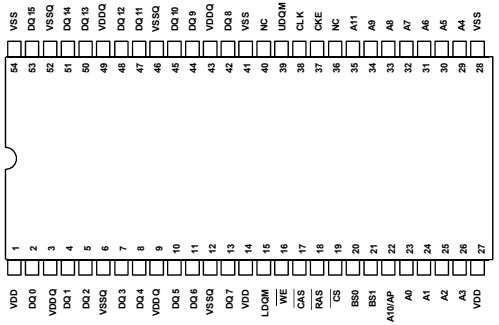

Pin description

PIN NUMBER	PIN NAME	FUNCTION	DESCRIPTION
23 ~ 26, 22, 29 ~35	A0–A11	Address	Multiplexed pins for row and column address. Row address: A0–A11. Column address: A0–A7. A10 is sampled during a precharge command to determine if all banks are to be precharged or bank selected by BS0, BS1.
20, 21	BS0, BS1	Bank Select	Select bank to activate during row address latch time, or bank to read/write during address latch time.
2, 4, 5, 7, 8, 10, 11, 13, 42, 44, 45, 47, 48, 50, 51, 53	DQ0–DQ15	Data Input/ Output	Multiplexed pins for data output and input.
19	$\overline{CS}$	Chip Select	Disable or enable the command decoder. When command decoder is disabled, new command is ignored and previous operation continues.
18	$\overline{RAS}$	Row Address Strobe	Command input. When sampled at the rising edge of the clock $\overline{RAS}$, $\overline{CAS}$ and $\overline{WE}$ define the operation to be executed.
17	$\overline{CAS}$	Column Address Strobe	Referred to $\overline{RAS}$
16	$\overline{WE}$	Write Enable	Referred to $\overline{RAS}$
39, 15	UDQM LDQM	Input/output mask	The output buffer is placed at Hi-Z (with latency of 2) when DQM is sampled high in read cycle. In write cycle, sampling DQM high will block the write operation with zero latency.
38	CLK	Clock Inputs	System clock used to sample inputs on the rising edge of clock.
37	CKE	Clock Enable	CKE controls the clock activation and deactivation. When CKE is low, Power Down mode, Suspend mode, or Self Refresh mode is entered.
1, 14, 27	VDD	Power	Power for input buffers and logic circuit inside DRAM.
28, 41, 54	VSS	Ground	Ground for input buffers and logic circuit inside DRAM.
3, 9, 43, 49	VDDQ	Power for I/O buffer	Separated power from VDD, to improve DQ noise immunity.
6, 12, 46, 52	VSSQ	Ground for I/O buffer	Separated ground from VSS, to improve DQ noise immunity.
36, 40	NC	No Connection	No connection.

Block diagram

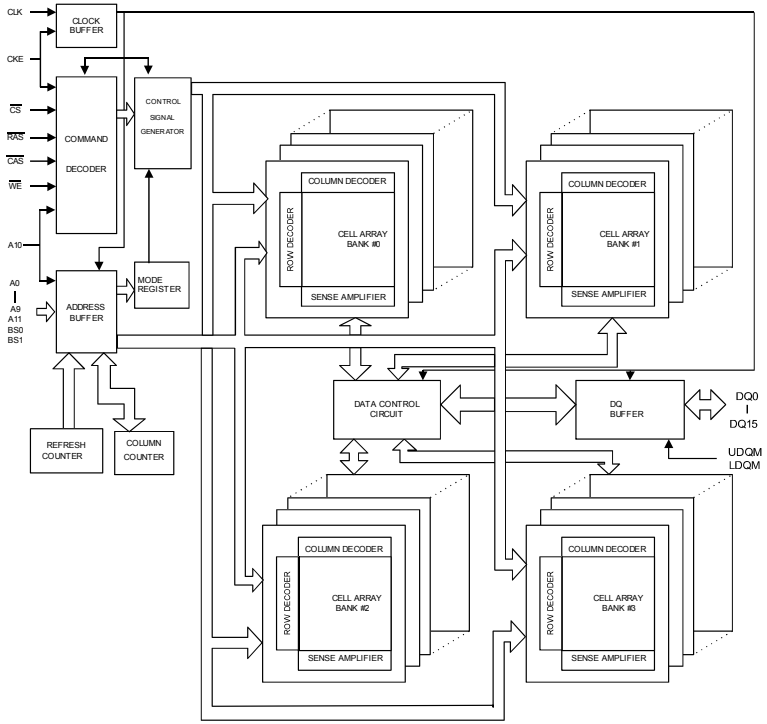

AK4458VN (DIGITAL : U1053)

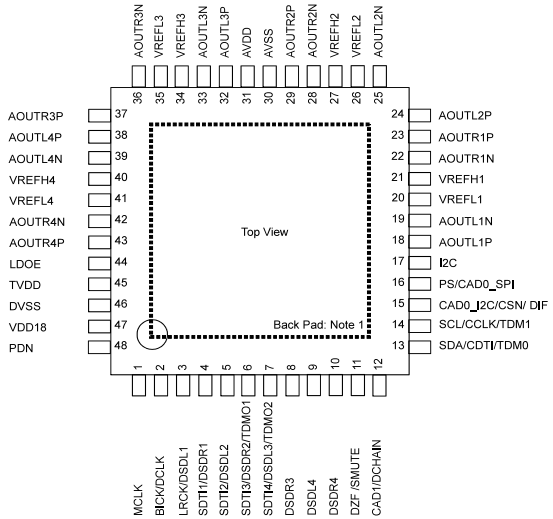

Pin Function

No.	Pin Name	I/O	Function	PD State
1	MCLK	I	External Master Clock Input Pin	Hi-Z
2	BICK	I	Audio Serial Data Clock Pin in PCM mode	Hi-z
	DCLK	I	DSD Clock Pin in DSD mode	
3	LRCK	I	Input Channel Clock Pin in PCM mode	Hi-Z
	DSDL1	I	Audio Serial Data Input in DSD mode	
4	SDTI1	I	Audio Serial Data Input in PCM mode	Hi-Z
	DSDR1	I	Audio Serial Data Input in DSD mode	
5	SDTI2	I	Audio Serial Data Input in PCM mode	Hi-Z
	DSDL2	I	Audio Serial Data Input in DSD mode	
6	SDTI3	I	Audio Serial Data Input in PCM mode	100k Ω Pull down
	DSDR2	I	Audio Serial Data Input in DSD mode	
	TDMO1	O	Audio Serial Data Output in Daisy Chain mode	
7	SDTI4	I	Audio Serial Data Input in PCM mode	100k Ω Pull down
	DSDL3	I	Audio Serial Data Input in DSD mode	
	TDMO2	O	Audio Serial Data Output in Daisy Chain mode	
8	DSDR3	I	Audio Serial Data Input in DSD mode	Hi-Z
9	DSDL4	I	Audio Serial Data Input in DSD mode	Hi-Z
10	DSDR4	I	Audio Serial Data Input in DSD mode	Hi-Z
11	DZF	O	Zero Input Detect in I2C Bus or 3-wire serial control mode	100k Ω Pull down
	SMUTE	I	Soft Mute Pin in Parallel control mode. When this pin is changed to "H", soft mute cycle is initiated. When it is returning to "L", the output mute is released.	
12	CAD1	I	Chip Address 0 Pin in I C Bus or 3-wire serial control mode	Hi-Z
	DCHAIN	I	Daisy Chain Mode select pin in Parallel control mode.	
13	SDA	I/O	Control Data Pin in I2C Bus serial control mode	Hi-Z
	CDTI	I	Control Data Input Pin in 3-wire serial control mode	
	TDM0	I	TDM Mode select pin in Parallel control mode.	
14	SCL	I	Control Data Clock Pin in I2C Bus serial control mode	Hi-Z
	CCLK	I	Control Data Clock Pin in 3-wire serial control mode	
	TDM1	I	TDM Mode select pin in Parallel control mode.	

No.	Pin Name	I/O	Function	PD State
15	CAD0_I2C	I	Chip Address 0 Pin in I2C Bus serial control mode	Hi-Z
	CSN	I	Chip Select Pin in 3-wire serial control mode	
	DIF	I	Audio Data Format Select in Parallel control mode. "L": 32-bit MSB, "H": 32-bit I2S	
16	PS	I	(I2C pin = "H") Control Mode Select Pin "L": I2C Bus serial control mode, "H": Parallel control mode.	Hi-Z
	CAD0_SPI	I	(I2C pin = "L") Chip Address 0 Pin in 3-wire serial control mode	
17	I2C	I	Control Mode Select Pin "L": 3-wire serial control mode "H": I2C Bus serial control mode or Parallel control mode.	Hi-Z
18	AOUTL1P	O	Lch Positive Analog Output 1 Pin	Hi-Z
19	AOUTL1N	O	Lch Negative Analog Output 1 Pin	Hi-Z
20	VREFL1	I	Negative Voltage Reference Input Pin, AVSS	Hi-Z
21	VREFH1	I	Positive Voltage Reference Input Pin, AVDD	Hi-Z
22	AOUTR1N	O	Rch Negative Analog Output 1 Pin	Hi-Z
23	AOUTR1P	O	Rch Positive Analog Output 1 Pin	Hi-Z
24	AOUTL2P	O	Lch Positive Analog Output 2 Pin	Hi-Z
25	AOUTL2N	O	Lch Negative Analog Output 2 Pin	Hi-Z
26	VREFL2	I	Negative Voltage Reference Input Pin, AVSS	Hi-Z
27	VREFH2	I	Positive Voltage Reference Input Pin, AVDD	Hi-Z
28	AOUTR2N	O	Rch Negative Analog Output 2 Pin	Hi-Z
29	AOUTR2P	O	Rch Positive Analog Output 2 Pin	Hi-Z
30	AVSS	-	Analog Ground Pin	—
31	AVDD	-	Analog Power Supply Pin, 3.0V-5.5V	—
32	AOUTL3P	O	Lch Positive Analog Output 3 Pin	Hi-Z
33	AOUTL3N	O	Lch Negative Analog Output 3 Pin	Hi-Z
34	VREFH3	I	Positive Voltage Reference Input Pin, AVDD	Hi-Z
35	VREFL3	I	Negative Voltage Reference Input Pin, AVSS	Hi-Z
36	AOUTR3N	O	Rch Negative Analog Output 3 Pin	Hi-Z
37	AOUTR3P	O	Rch Positive Analog Output 3Pin	Hi-Z
38	AOUTL4P	O	Lch Positive Analog Output 4 Pin	Hi-Z
39	AOUTL4N	O	Lch Negative Analog Output 4 Pin	Hi-Z
40	VREFH4	I	Positive Voltage Reference Input Pin, AVDD	Hi-Z
41	VREFL4	I	Negative Voltage Reference Input Pin, AVSS	Hi-Z
42	AOUTR4N	O	Rch Negative Analog Output 4 Pin	Hi-Z
43	AOUTR4P	O	Rch Positive Analog Output 4 Pin	Hi-Z
44	LDOE	I	Internal LDO Enable Pin. "L": Disable, "H": Enable	Hi-Z
45	TVDD	-	Digital Power Supply Pin, 3.0V-3.6V	—
46	DVSS	-	Digital Ground Pin	—
47	VDD18	O	LDO Output Pin (LDOE pin = "H") This pin should be connected to DVSS with 1.0µF.	(Note 4)
		I	1.8V Power Input Pin (LDOE pin = "L")	
48	PDN	I	Power-Down & Reset Pin When this pin is "L", the AK4458 is powered-down and the control registers are reset to default state.	Hi-Z

Note 2. All input pins except internal pull-up/down pins should not be left floating.
Note 3. PCM mode and DSD mode are controlled by registers. Daisy Chain mode is controlled by both registers and pins.
Note 4. This pin outputs DVSS when the LDOE pin = "H" and Hi-z when the LDOE pin = "L".

FUNCTIONAL BLOCK DIAGRAM

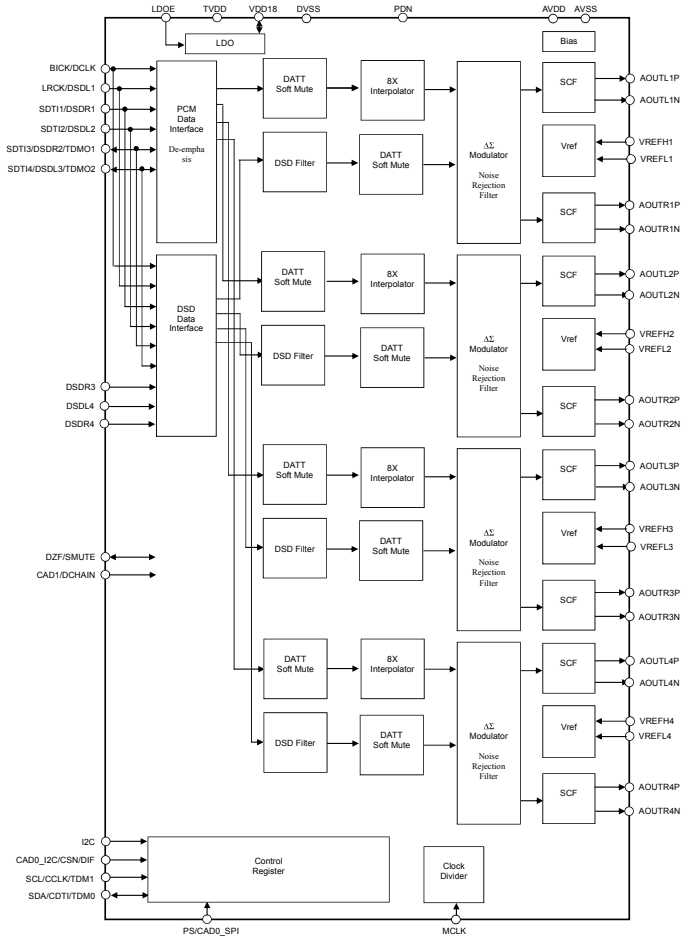

NJU72343 (AV : U5202)

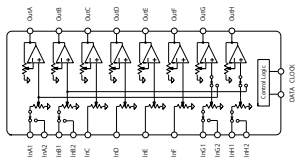

Pin Function

No.	Symbol	Function
1	AREF	Analog reference potential terminal
2	ADR	Address selection terminal
3	InA2	Ach input2
4	InB2	Bch input2
5	InA1	Ach input1
6	InB1	Bch input1
7	InC	Cch input
8	InD	Dch input
9	InE	Ech input
10	InF	Fch input
11	InG1	Gch input1
12	InH1	Hch input1
13	InG2	Cch input2
14	InH2	Dch input2
15	MUTE	External mute control terminal
16	REF	Digital reference potential terminal

No.	Symbol	Function
17	DATA	IC control data input
18	CLOCK	IC control clock input
19	VDDOUT	Digital power supply output terminal
20	AREF	Analog reference potential terminal
21	OutH	Hch output
22	OutG	Gch output
23	OutF	Fch output
24	OutE	Ech output
25	OutD	Dch output
26	OutC	Cch output
27	OutB	Bch output
28	OutA	Ach output
29	AREF	Analog reference potential terminal
30	V-	negative power supply terminal
31	AREF	Analog reference potential terminal
32	V+	positive power supply terminal

NJU72750A (AV : U5201)

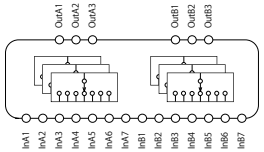

Pin Function

No.	Symbol	Function
1	V+	positive power supply terminal
2	InA1	Ach input1
3	InB1	Bch input1
4	InA2	Ach input2
5	InB2	Bch input2
6	InA3	Ach input3
7	InB3	Bch input3
8	InA4	Ach input4
9	InB4	Bch input4
10	InA5	Ach input5
11	InB5	Bch input5
12	InA6	Ach input6
13	InB6	Bch input6
14	InA7	Ach input7
15	InB7	Bch input7
16	REF	Reference potential terminal for BIAS

No.	Symbol	Function
17	DATA	IC control data input
18	CLOCK	IC control clock input
19	NC	-
20	NC	-
21	OutB3	Bch output3
22	OutA3	Ach output3
23	REF_B	Bch reference potential terminal
24	OutB2	Bch output2
25	OutA2	Ach output2
26	REF_A	Ach reference potential terminal
27	OutB1	Bch output1
28	OutA1	Ach output1
29	NC	-
30	ADR0	Address selection pin 0
31	ADR1	Address selection pin 1
32	V-	negative power supply terminal

NJM2595MTE1 (AV : U5206)

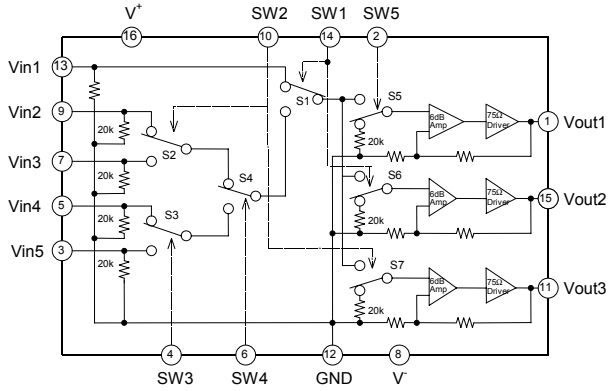

2. FL DISPLAY

FLD (018BT021GINK) (FRONT : U4400)

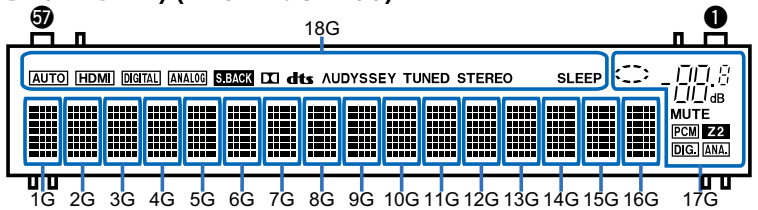

PIN CONNECTION

PIN NO.	57	56	55	54	53	52	51
CONNECTION	F2	NP	NP	NP	LGND	PGND	VH

PIN NO.	50	49	48	47	46	45	44	43	42	41	40	39	38	37	36	35	34	33	32	31	30	29	28	27	26	25	24	23	22	21	20	19	18	17	16	15	14	13	12	11	10	9	8	7	6	5	4	3	2	1
CONNECTION	VDD	OSC	$\overline{\text{RESET}}$	$\overline{\text{CS}}$	CP	DA	TSA	TSB	NX	NX	NX	NX	NX	NX	NX	NX	NX	NX	NX	NX	NX	NX	NX	NX	NX	NX	NX	NX	NX	NX	NX	NX	NX	NX	NX	NX	NX	NX	NX	NX	NX	NX	18G	17G	Q17G	Q18G	NP	NP	NP	F1

NOTE

1) F1, F2 ----Filament
2) NP ------No pin
3) DL ------Datum Line
4) NX ------No extend pin
5) LGND ----Logic GND pin
6) PGND ----Power GND pin
7) VH ------High Voltage Supply pin
8) VDD ------Logic Voltage Supply pin
9) CP ----Shift Register Clock
10) DA ----Serial Data Input
11) TSA, B --Test pin
12) $\overline{\text{CS}}$ ------Chip Select Input pin
13) $\overline{\text{RESET}}$ --Reset Input
14) OSC ----Pin for self-oscillation
15) Solder composition is Sn-3Ag-0.5Cu.
16) 17G, 18G ---Grid
17) Q17G, Q18G ---Driver Output Port.
18) Field of vision is a minimum of 21.8° from the lower side.

MECHANICAL

DISASSEMBLY

Flowchart
1. WiFi ANT
2. FRONT PANEL ASSY
3. RADIATOR ASSY
4. DIGITAL PCB
5. SPK PCB
6. TRANS
7. SMPS PCB
8. REG PCB
9. AV PCB

EXPLODED VIEW

PACKING VIEW

DISASSEMBLY

Flowchart

- Remove each part following the flow below.
- Reassemble the removed parts in the reverse order.
- Read "SAFETY PRECAUTIONS" before reassembling the removed parts.
- If wire bundles are removed or moved during adjustment or part replacement, reshape the wires after completing the work. Failure to shape the wires correctly may cause problems such as noise.
- See "EXPLODED VIEW"

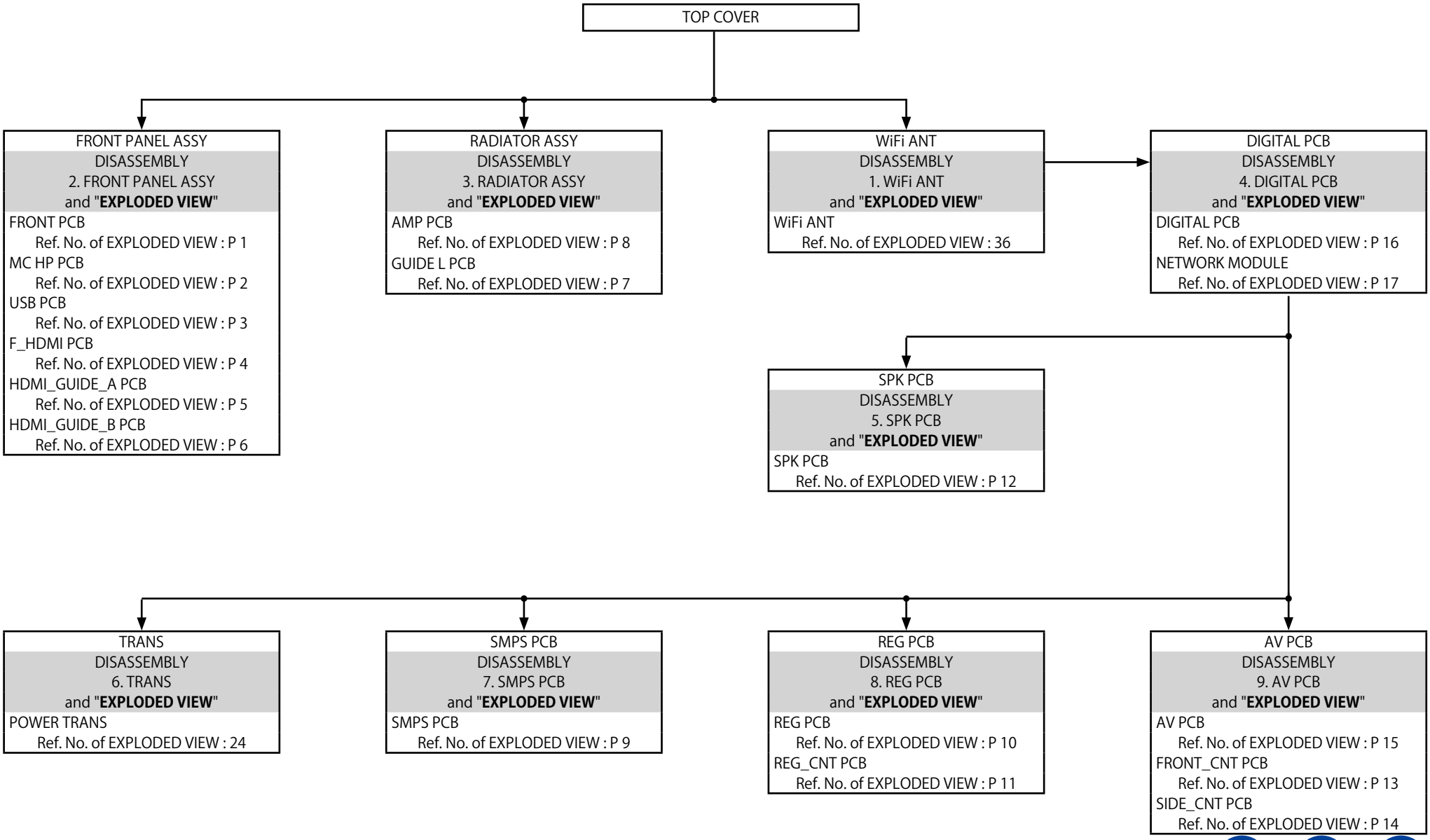

Explanatory Photos for DISASSEMBLY

- For the shooting direction of each photos used in this manual, see the photo below.
- **A, B, C and D** in the photo below indicate the shooting directions of photos.
- The photographs with no shooting direction indicated were taken from the top of the unit.
- Photos of NR1508 U are used in this manual.

The viewpoint of each photograph

(Shooting direction : X) [View from the top]

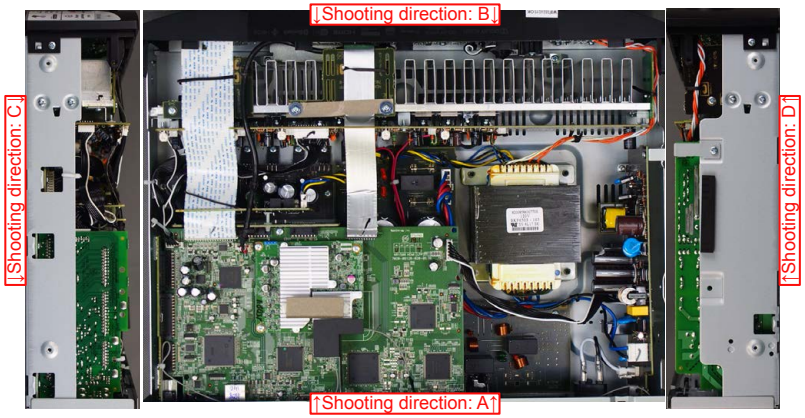

1. WiFi ANT

Proceeding : TOP COVER → WiFi ANT

(1) Remove the INSULATION SHEET. Cut the wire clamps. Remove the tape.

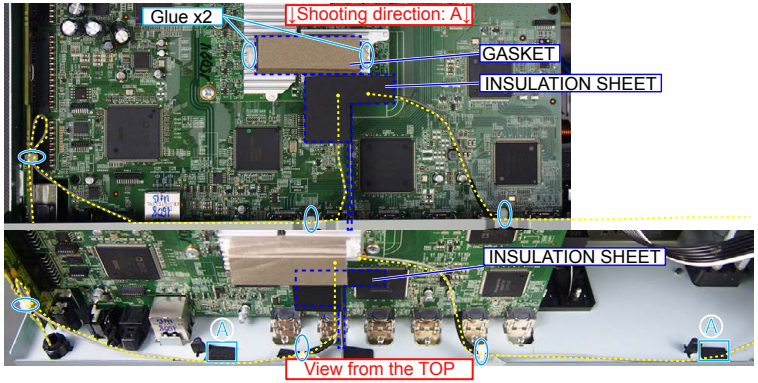

NOTE : • If the INSULATION SHEET has been removed, replace with a new sheet.
• When attaching the INSULATION SHEET, align with the Silk-Print and up to side of the NETWORK MODULE PCB.
• Fix with tape in position A.

2. FRONT PANEL ASSY

Proceeding : TOP COVER → FRONT PANEL ASSY

(1) Remove the screws.

(2) Remove the screws. Remove the CORD HOLDER and connectors. Remove the FFC.

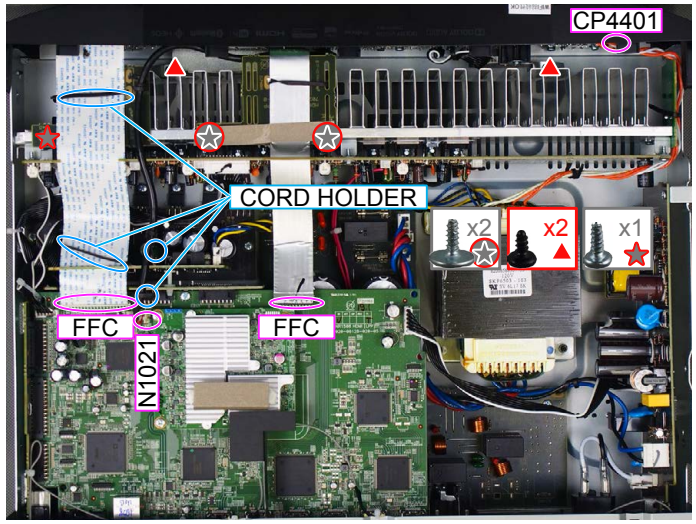

3. RADIATOR ASSY

Proceeding : TOP COVER → RADIATOR ASSY

(1) Remove the screws.

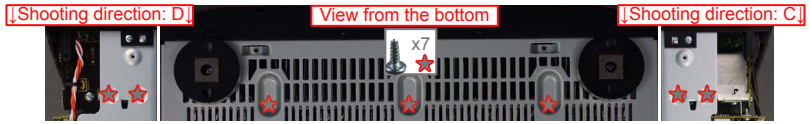

(2) Cut the wire clamps, then remove the CORD HOLDERs and connectors.
Remove the screws. Remove the FFC.

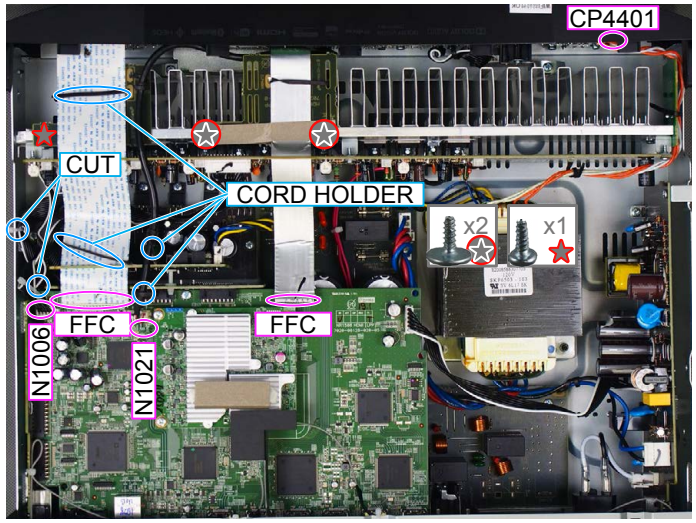

(3) Remove the CORD HOLDERs and connectors.

4. DIGITAL PCB

Proceeding : TOP COVER → WiFi ANT → DIGITAL PCB

(1) Remove the screws.

(2) Cut the wire clamps, then remove the CORD HOLDERs and connectors.
Remove the FFC.

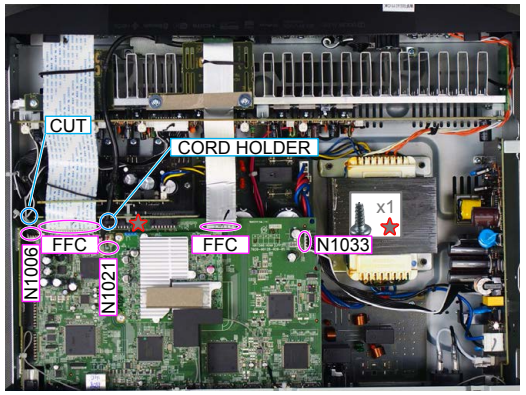

(3) Remove the connector.

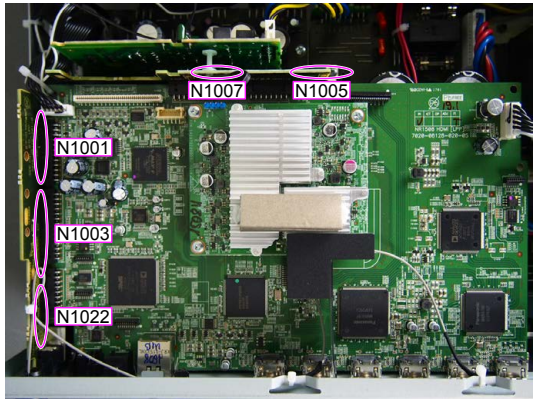

5. SPK PCB

Proceeding : TOP COVER → WiFi ANT → DIGITAL PCB → SPK PCB

(1) Remove the screws.

(2) Remove the screws. Remove the CORD HOLDER and connectors. Remove the HOLDER.

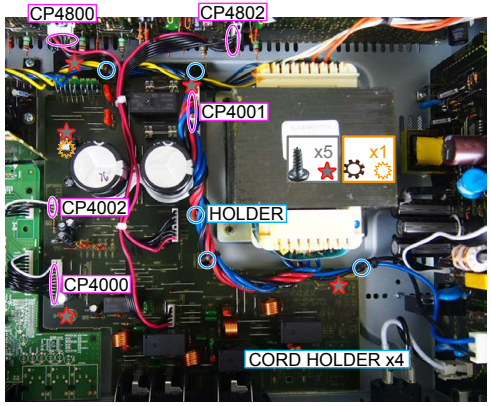

6. TRANS

Proceeding : TOP COVER → WiFi ANT → DIGITAL PCB → TRANS

(1) Remove the CORD HOLDERs and connector wires.

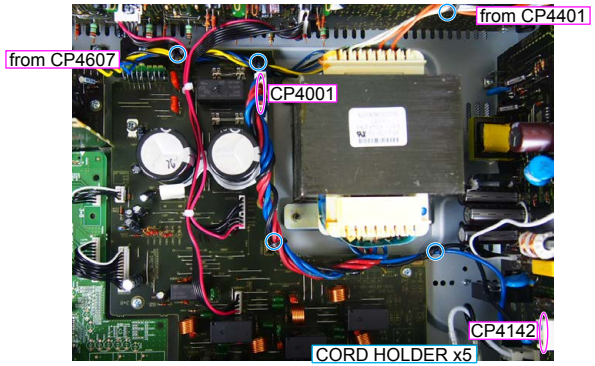

(2) Remove the screws.

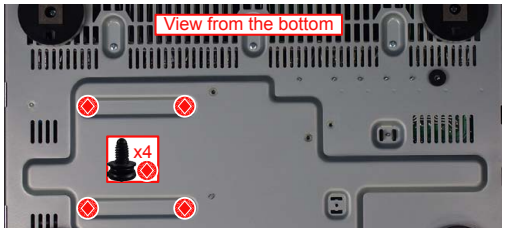

NOTE : It will separate and TRANS will fall from SET, if screws is removed.

7. SMPS PCB

Proceeding : TOP COVER → SMPS PCB

See "EXPLODED VIEW" for instructions on removing the SMPS PCB.

8. REG PCB

Proceeding : TOP COVER → REG PCB

See "EXPLODED VIEW" for instructions on removing the REG PCB.

9. AV PCB

Proceeding : TOP COVER → COVER → DIGITAL PCB → AV PCB

See "EXPLODED VIEW" for instructions on removing the AV PCB.

EXPLODED VIEW

Parts List
http://dmedia.dmglobal.com/Document/DocumentDetails/23156

NR1508/1608(Marantz) EXPLODE VIEW

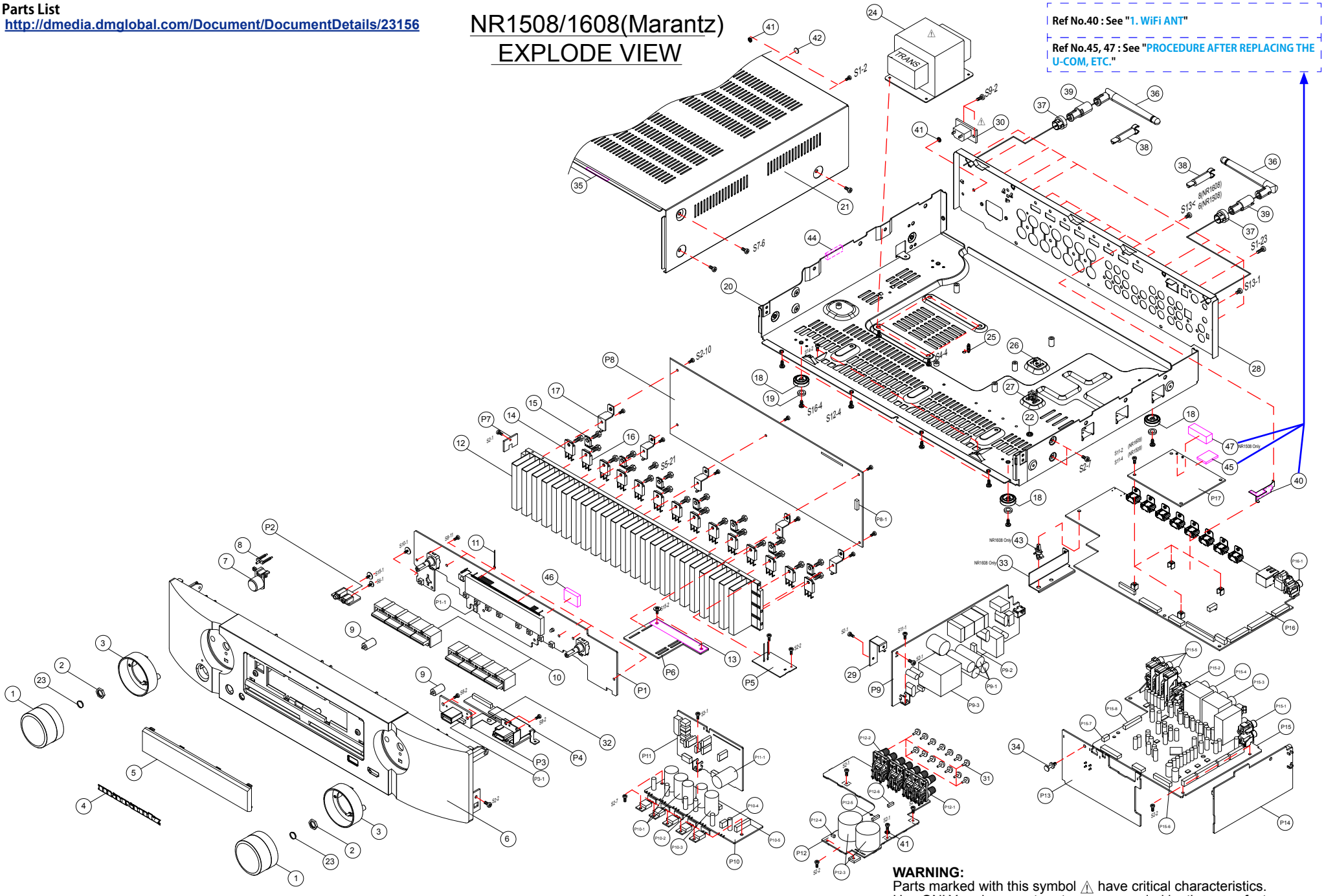

WARNING:
Parts marked with this symbol ⚠ have critical characteristics.
Use ONLY replacement parts recommended by the manufacturer.

PACKING VIEW

Parts List
http://dmedia.dmglobal.com/Document/DocumentDetails/23156

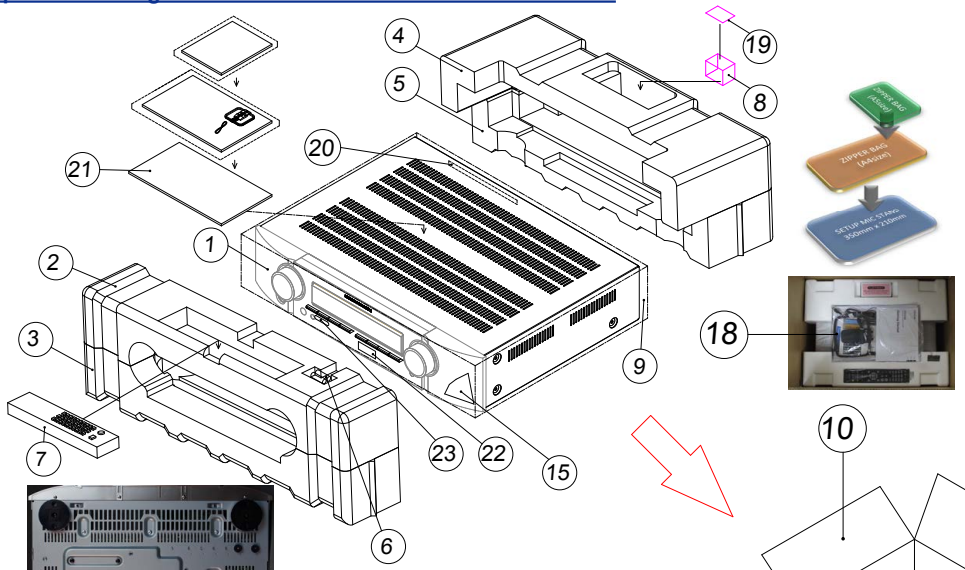

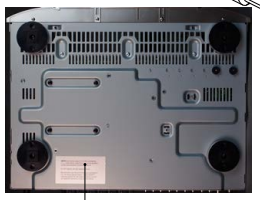

17 NR1608 Only

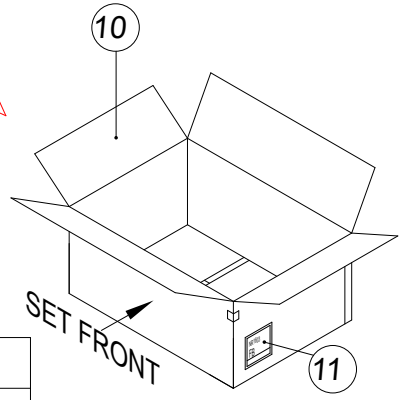

MANUAL POLYBAG ASSY	*MIC ASSY*

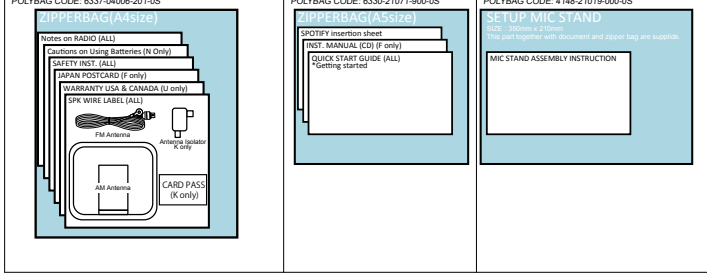

* POLY BAG PACKING STYLE	* BOX BOTTOM TAPE(O)	* BOX BOTTOM CLIP(X)

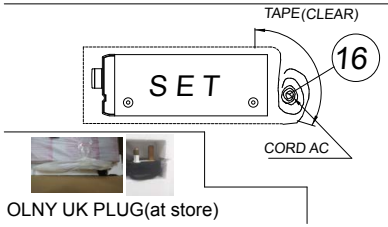

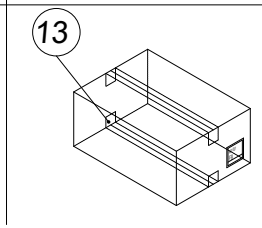

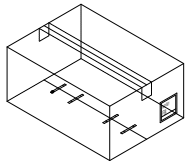

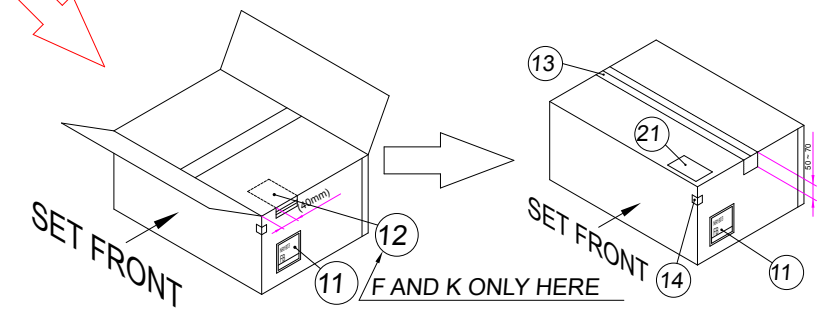

REPAIR INFORMATION

TROUBLE SHOOTING

1. POWER
2. Analog video
3. HDMI/DVI
4. AUDIO
5. Network / Bluetooth / USB
6. SMPS

HDMI "Rx/Tx" Failure Detection

1. Prior checking
2. Preparations for checking HDMI Switcher reception/transmission register
3. Starting detecting the point of failure
4. Device implementation location

CLOCK FLOW & WAVE FORM IN DIGITAL BLOCK

SPECIAL MODE

Special mode setting button
1. Version Display Mode
2. PANEL / REMOTE LOCK Selection Mode
3-1. Selecting the Mode for Service-related
3-2. Protection History Display Mode
3-3. Operation Info Mode
3-4. TUNER STEP mode (U / N only)
4. Protection Pass Mode
5. Network Initialization Mode
6. Clearing the Operation Info

DIAGNOSTIC MODE

Service Path Check Mode
DIAGNOSTIC PATH DIAGRAM

JIG FOR SERVICING

ADJUSTMENT

1. POWER

1.1. The unit does not power on

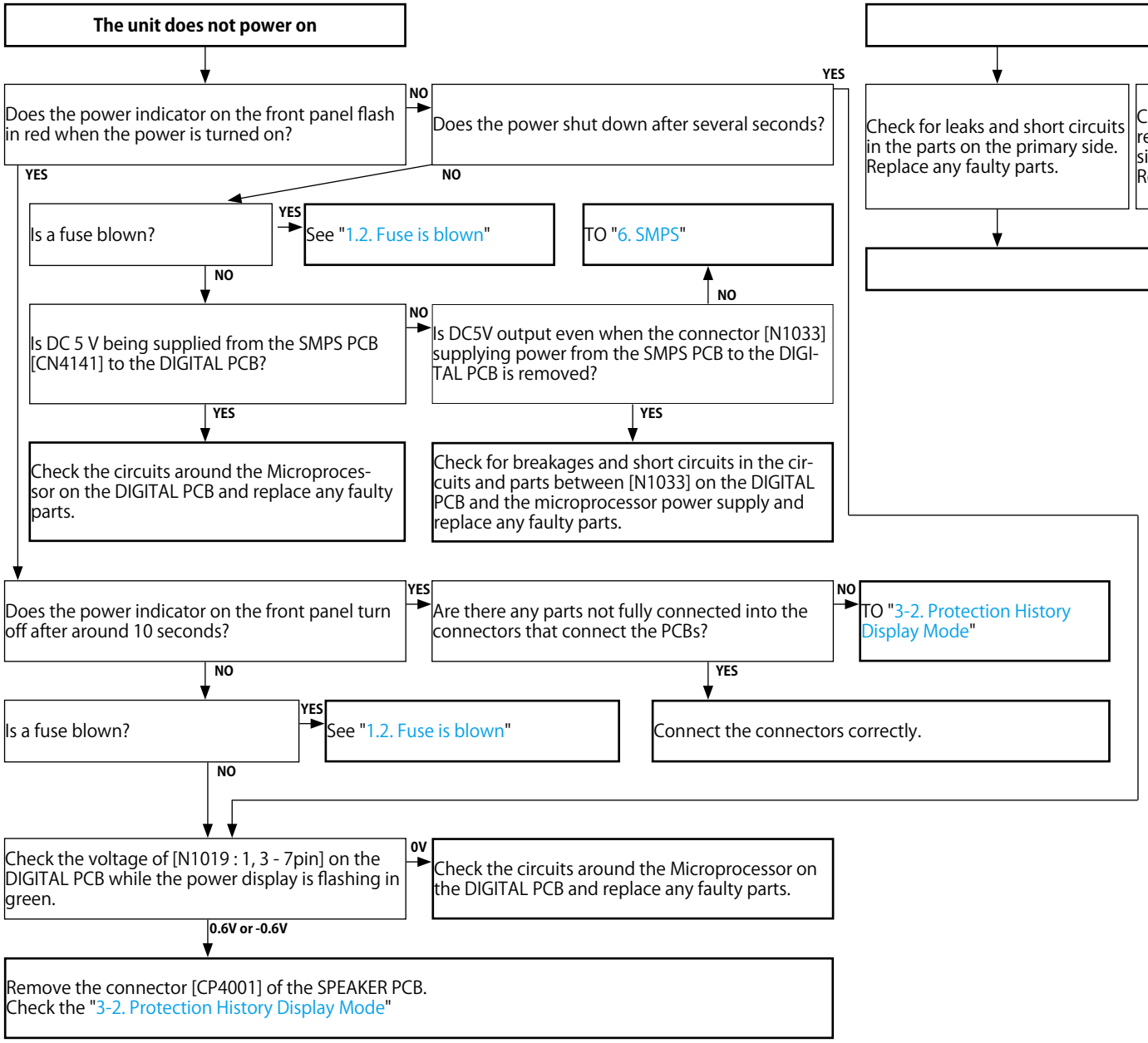

1.2. Fuse is blown

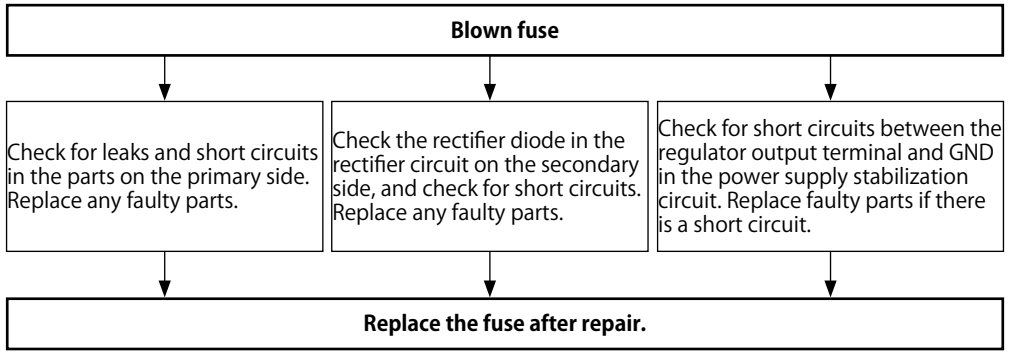

2. Analog video

CVBS / COMPONENT / HDMI OUT NG

Input CVBS Function : CBL / SAT	Input COMPONENT Function : CBL / SAT	Input HDMI
To "A"		To "3. HDMI/DVI"

DIGITAL test point

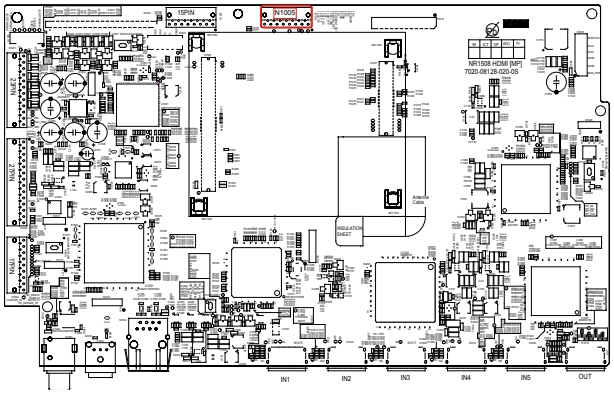

AV test point

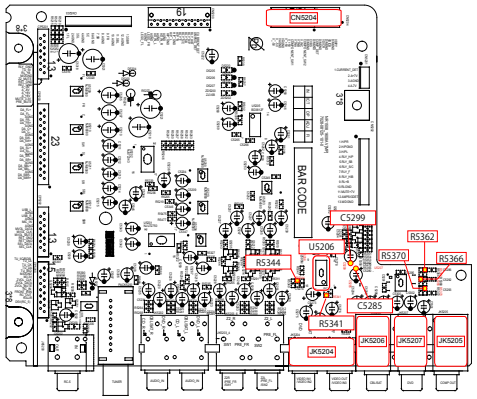

A

Input CVBS

① Check the settings of each IC.
Are the following voltages set?
DIGITAL PCB
[N1039 : 12 pin] : Hi (3.3 V)
[N1039 : 13 pin] : Hi (3.3 V)
[N1039 : 14 pin] : Lo (0 V)

NO → DIGITAL PCB faulty.

YES

② Extend the DIGITAL PCB using the jig.

③ Is the power voltage being output correctly?
V+5V : [C5285 : + side]
V-5V : [C5299 : - side]

NO → Check the connection between the FRONT CONNECTOR PCB and the AV PCB.

NO → The regulator part of REG PCB is faulty.

YES

④ Is a signal being output from the video amplifier?
CVBS : [R5344]
: [R5341]

NO →
- Check the [U5206] power voltage and check the soldering of the surrounding circuits.
- The pattern between [U5206] and [JK5204] is faulty.

YES

- Check the connection between the FRONT CONNECTOR PCB and the AV PCB.
- Check the soldering of [CP4611] on the FRONT CONNECTOR PCB.
- Check the soldering of [CN5204] on the AV PCB.
- Check the soldering of [JK5204] on the AV PCB.

※ These instructions refer to the AV PCB unless otherwise specified.

3.1. No picture or sound is output (HDMI to HDMI)

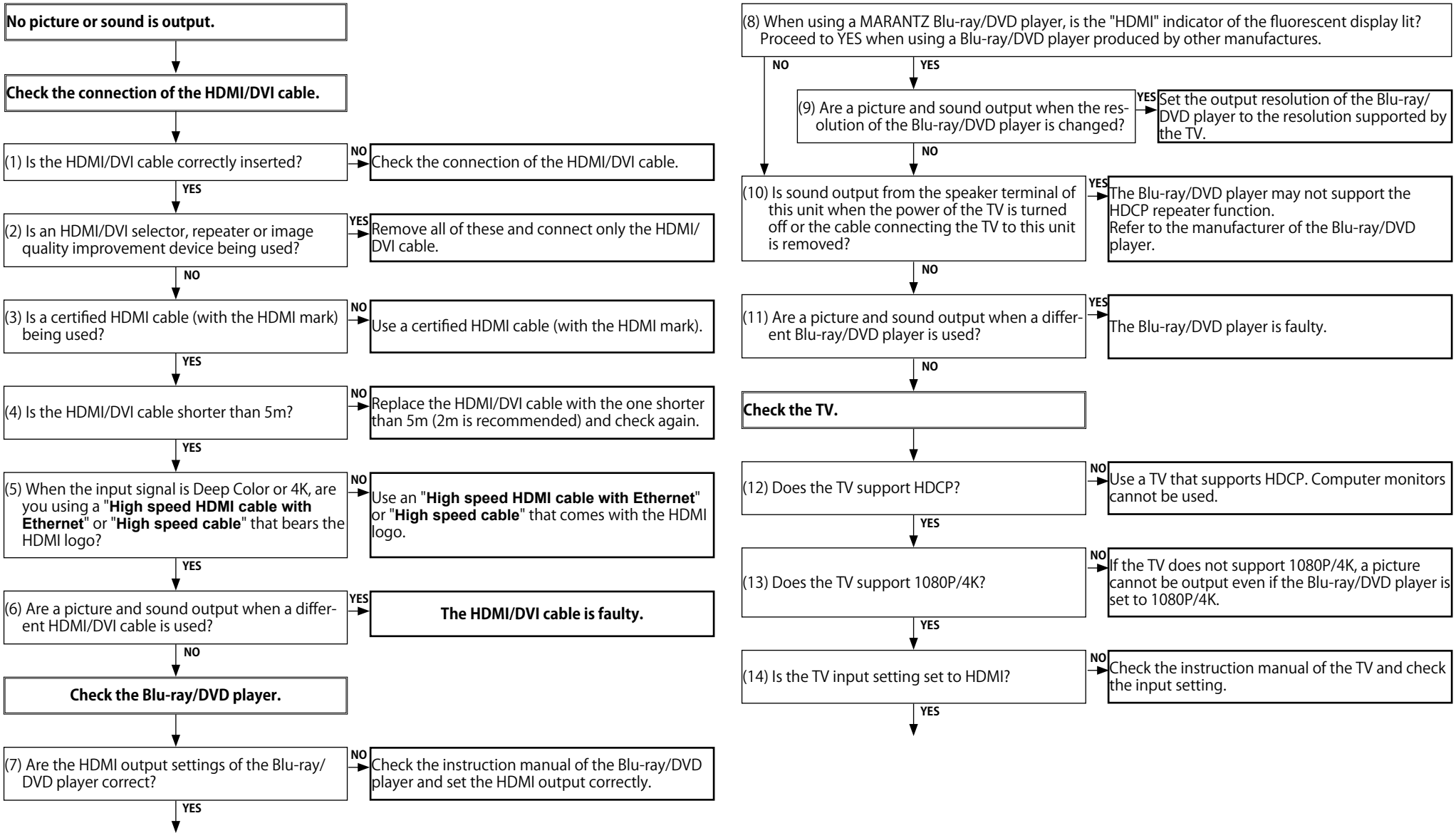

Go to next page.

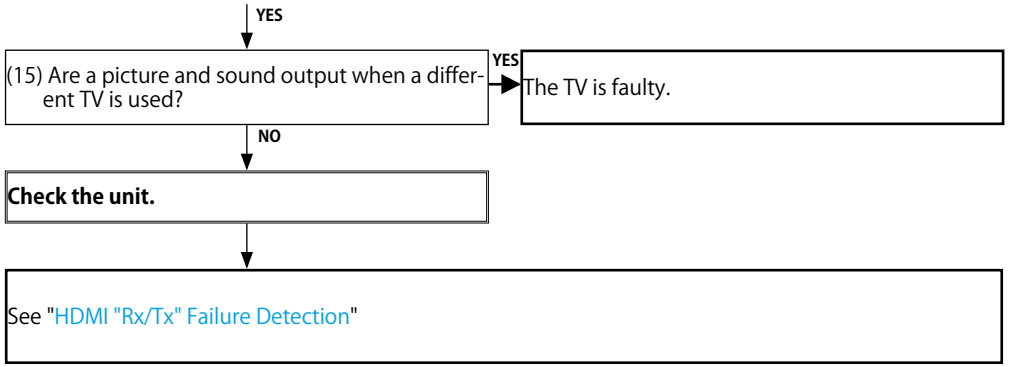
YES
(15) Are a picture and sound output when a different TV is used?
YES
The TV is faulty.
NO
Check the unit.
See "HDMI "Rx/Tx" Failure Detection"

4.1. AUDIO CHECK

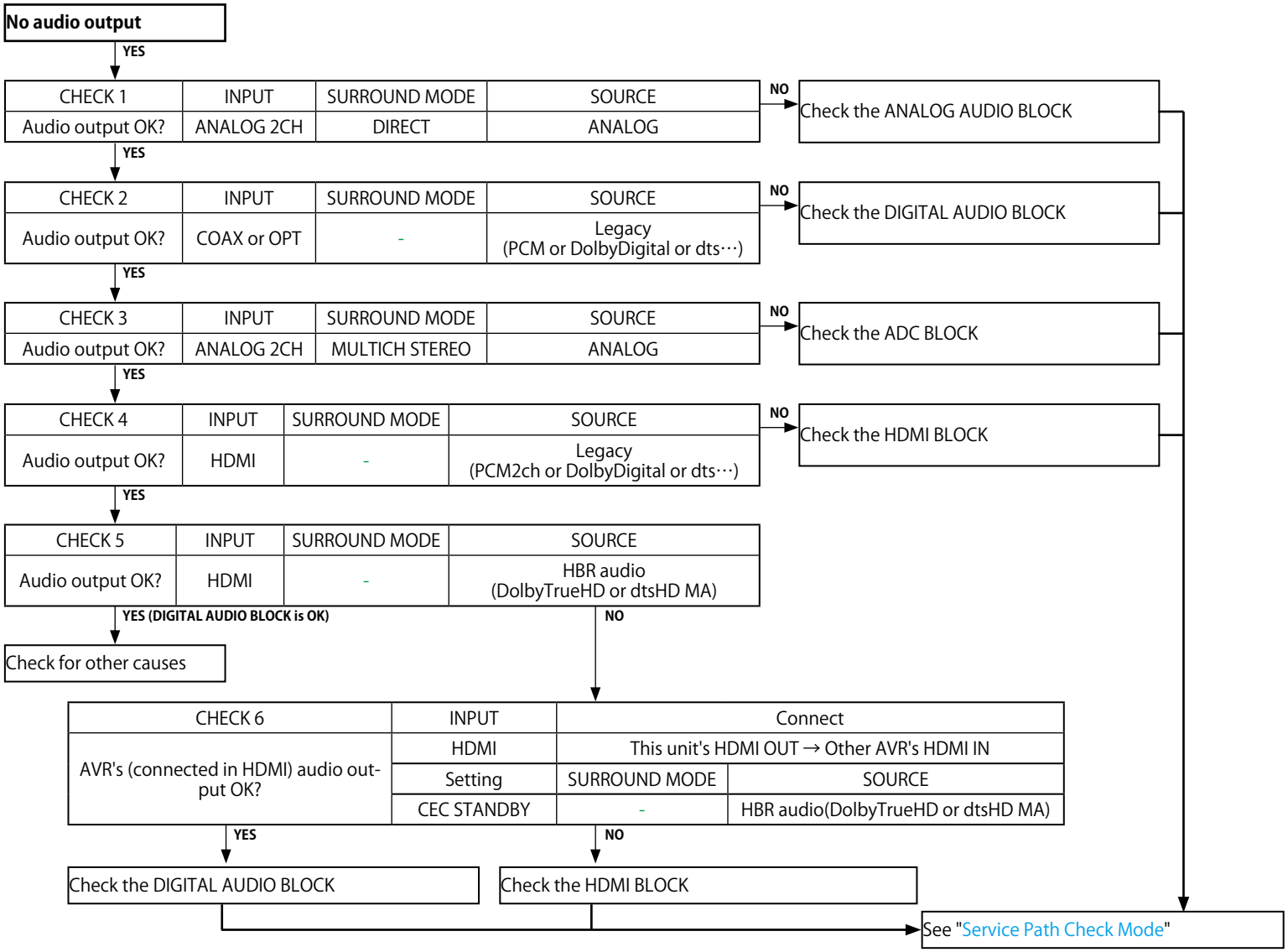

4.2. Power AMP (AMP PCB)

When using the protection pass mode, do not connect speakers to the speaker terminals.

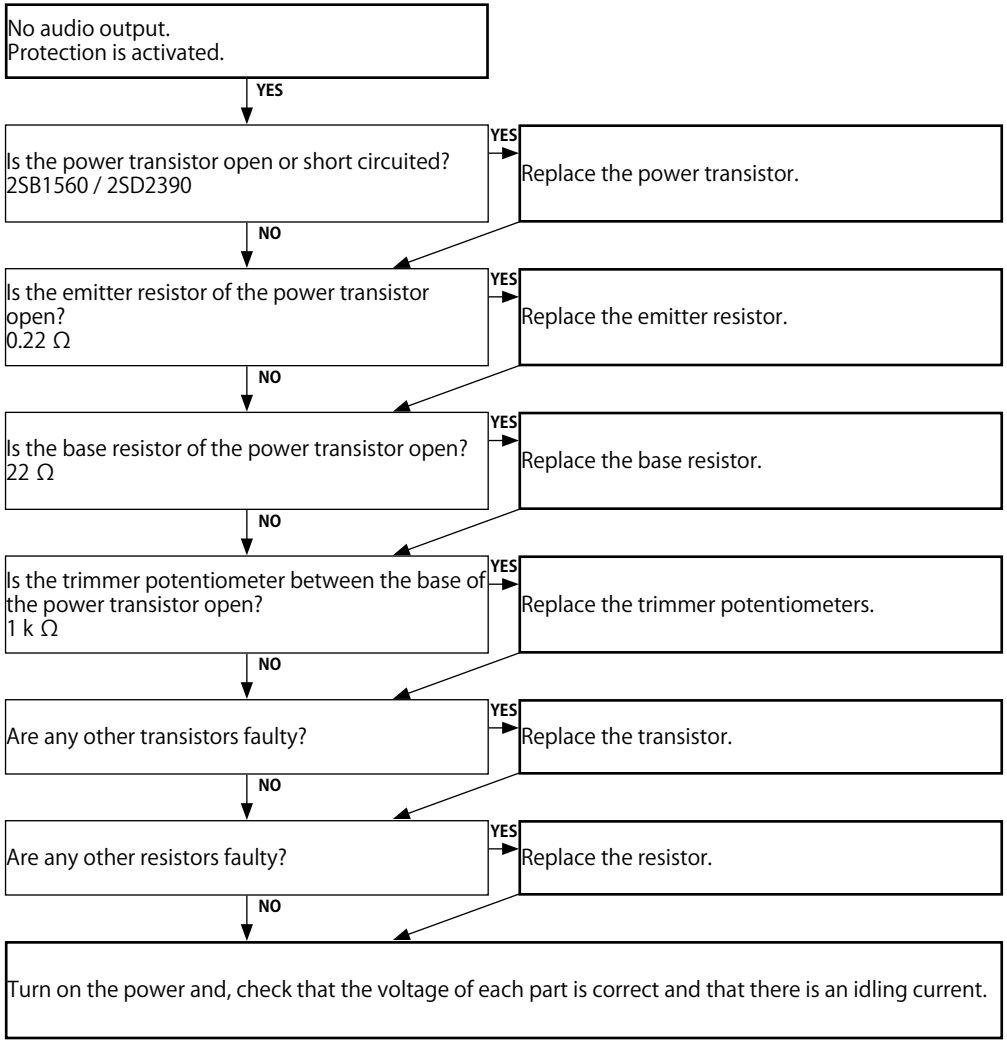

4.3. Analog audio

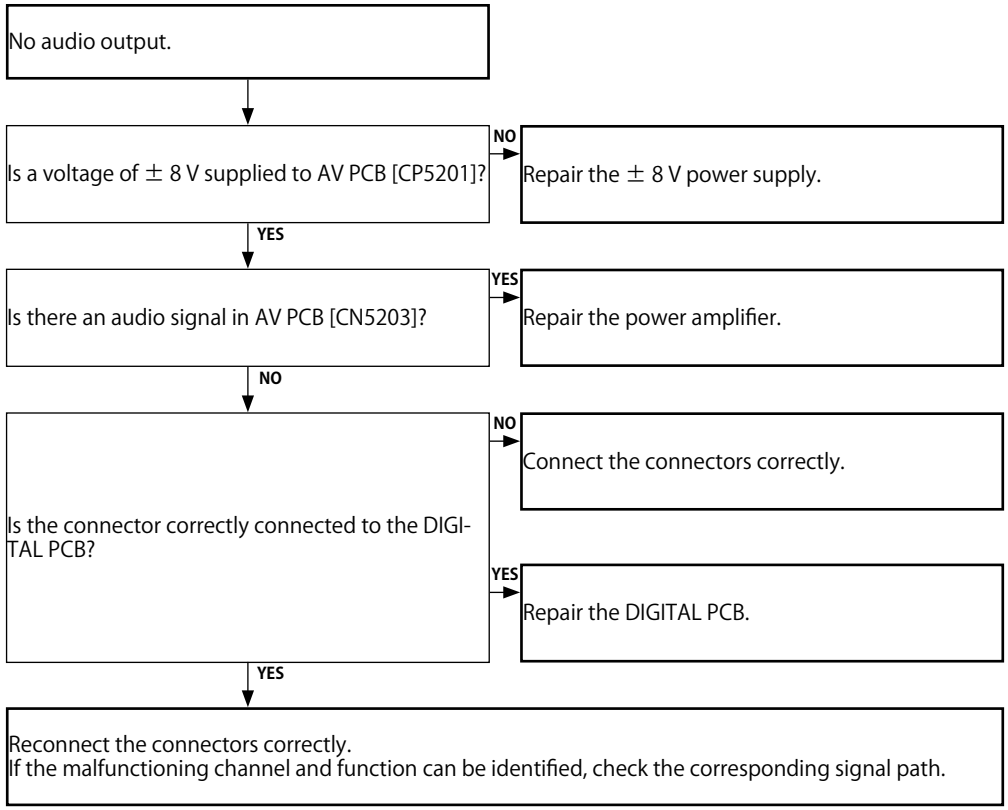

5.1. Cannot connect to the network

Check the connection environment

Is the LAN cable correctly inserted?
- NO → Insert the LAN cable correctly and then turn on the power again.
- YES ↓

Check the setting

Are the network settings of this unit correct?
- NO → Set the IP address, etc. correctly. When the static IP address is used, check that no other devices have the same IP address and that the subnet mask settings are correct.
- YES ↓

Are peripheral devices such as the router and hub connected to this unit correctly?
- NO → Connect the peripheral devices correctly.
- YES ↓

Are the router settings correct?
- NO → Check the instruction manual of the router and configure the settings correctly. Check that there are no connection restrictions by MAC addresses, etc.
- YES ↓

Checking the unit

Can the voltage (5V) be confirmed between [N1033 : 2-5pin]?
- NO → The circuit between the AC inlet and [N1033] is faulty. Check the SMPS PCB.
- YES ↓

Can the output voltage (5V) to [Q1086 : FET-SW] be confirmed?
- NO → Is NET5V POWER [U1013 : 40pin uCOM] "**Hi**" ?
  - NO → The circuit of NET5V POWER between [U1013-Q1086 : FET-SW] are faulty.
  - YES → The circuit around [Q1086 : FET-SW] is faulty.
- YES ↓

Can the output voltage (3.3V) to [U1067 : DC-DC Conv.] be confirmed?
- NO → Is D5V_POWER [U1013 : 112pin uCOM] "**Hi**" ?
  - NO → The circuit of D5V_POWER between [U1013-U1067] are faulty.
  - YES → The circuit around [U1067 : DC-DC.Conv.] is faulty.
- YES ↓

Can the output voltage (3.3 V) to [Q1080 : FET-SW] be confirmed?
- NO → Is NET3.3V POWER [U1013 : 111 pin uCOM] "**Hi**" ?
  - NO → The circuit of NET3.3V POWER between [U1013-Q1080] are faulty.
  - YES → The circuit around [Q1080 : FET-SW] is faulty.
- YES ↓

Go to next page.

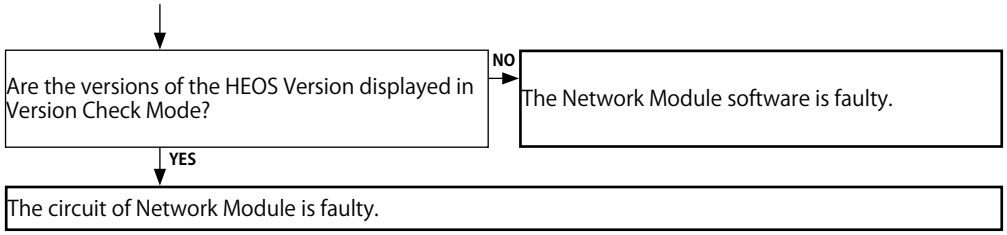

5.2. Cannot establish a Bluetooth connection

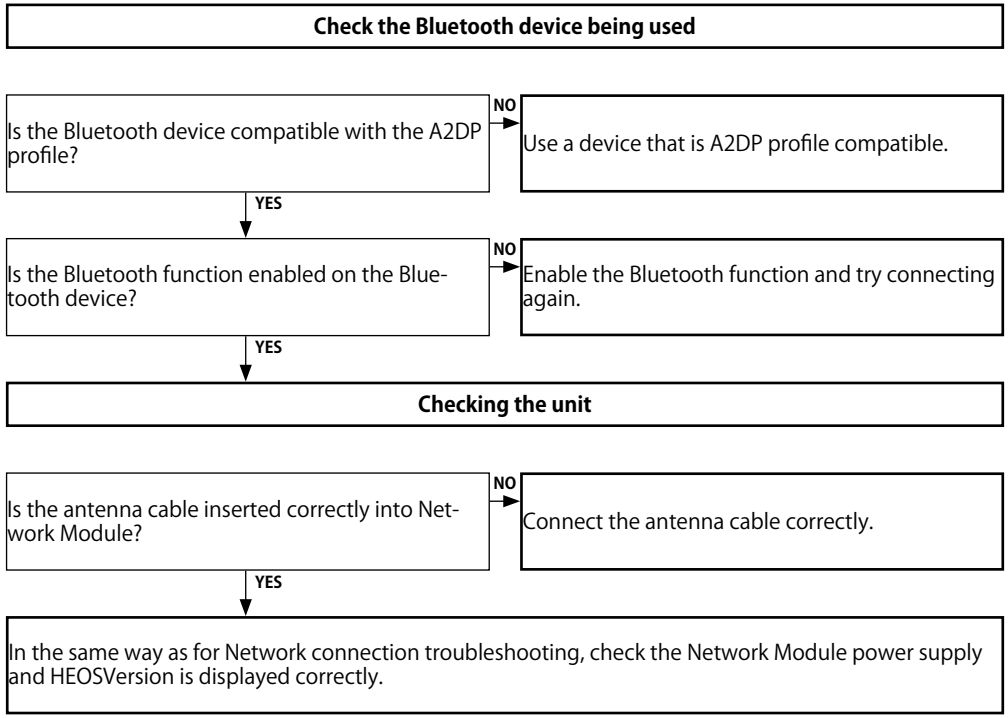

5.3. Cannot recognize the connected USB device

Check the USB device being used

Is a USB hub being used?
- YES → Do not use a USB hub.
- NO ↓

Is the USB device supported by this unit?
- NO → This unit supports devices in the FAT16- and FAT32-formatted mass storage class, MTP-compatible devices and iPod devices (except for some models).
- YES ↓

Checking the unit

Are [N1021] of the DIGITAL PCB and [CN4401] of the FRONT PCB correctly connected?
- NO → Connect the connectors correctly.
- YES ↓

Can a voltage (5V) be confirmed between [CP4402 : 1 - 4pin] (USB Connector) on FRONT PCB?
- NO → The circuit around [U1006] of the DIGITAL PCB is faulty.
- YES ↓

The USB signal circuit between Network Module and [CP4402] of the FRONT PCB are faulty.

5.4. No picture or sound is output

Checking the unit (If no picture is output)

Are digital video signals(LEGOPCK, LEGOVS, LEGOHS, LEGODE, LEGOVD0-LEGOVD23) output from Network Module to [U1024 : MN864787]?
- NO → The circuit around Network Module, [U1024 : MN864787] is faulty.
- YES ↓

• Check the VIDEO circuit.

Checking the unit:(If no sound is output)

Are the I2S signal output to [U1008 : 7, 11, 13, 14pin] of the DIGITAL PCB ?
- NO → Network Module is faulty.
- YES ↓

Are audio signal output to DSP1INF/FL[R1995] on DIGITAL PCB.
- NO → The circuit around [U1041 : A.PLD] is faulty.
- YES ↓

Check the [U1021 : DSP] AUDIO circuit and the circuits thereafter.

DIGITAL test point

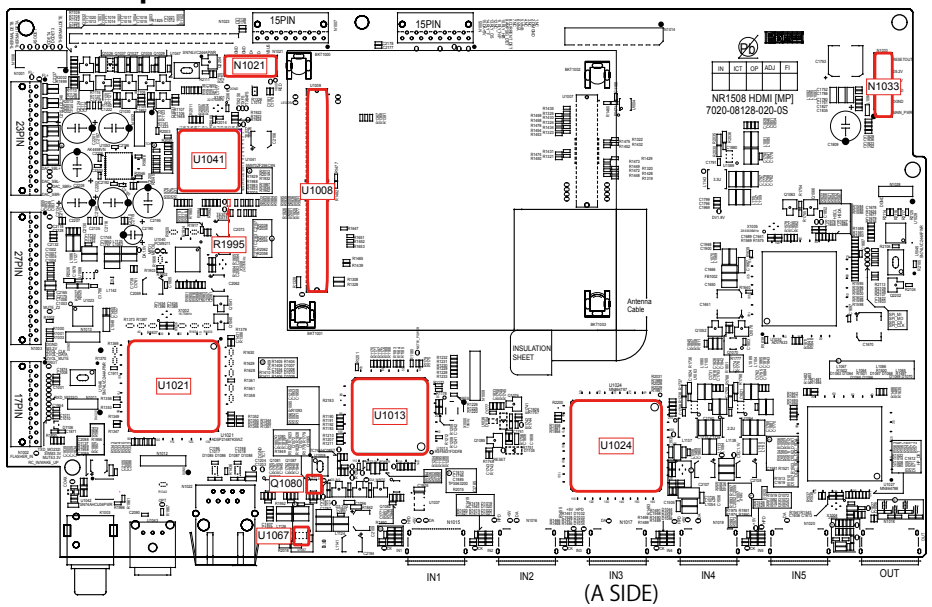

(A SIDE)

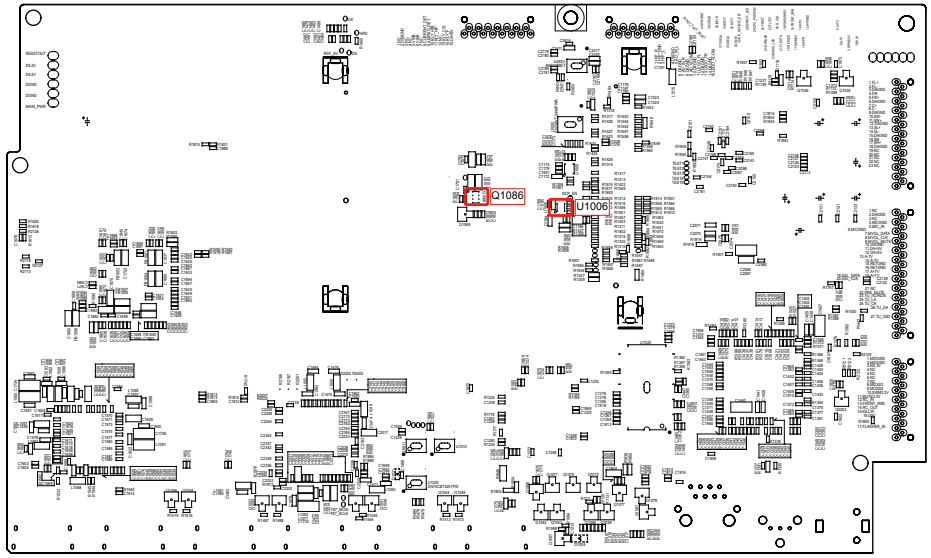

(B SIDE)

USB test point

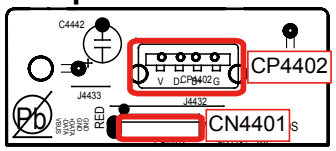

(A SIDE)

6. SMPS

DC 5V is not output.

Is [U4140 : TOP268VG] damaged?
- YES → Replace the [U4140 : TOP268VG and D4142 / D4143 / D4144 / D4145].
- NO ↓

Is the fuse [F4140] functioning properly?
- YES → Is [D4142 / D4143 / D4144 / D4145 / U4140] damaged?
  - YES → Replace the damaged part.
- NO ↓

Are there any short circuits caused by the soldering on the PCB?
- YES → Repair the short circuited area on the PCB.
- NO ↓

Are any parts damaged?
- YES → Check the damaged parts.
  - YES → Replace the damaged part.

Operation waveform for each part

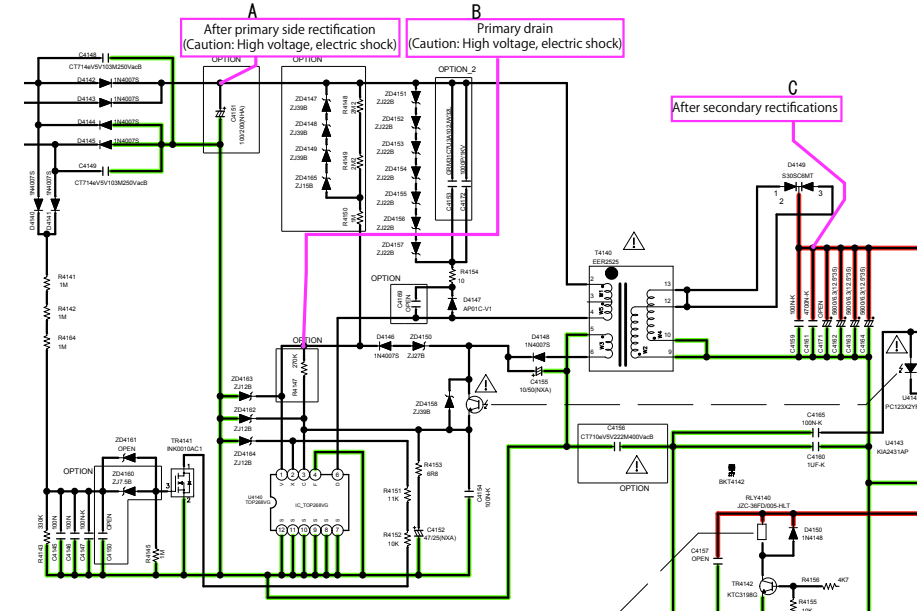

SMPS unit (Unloaded)

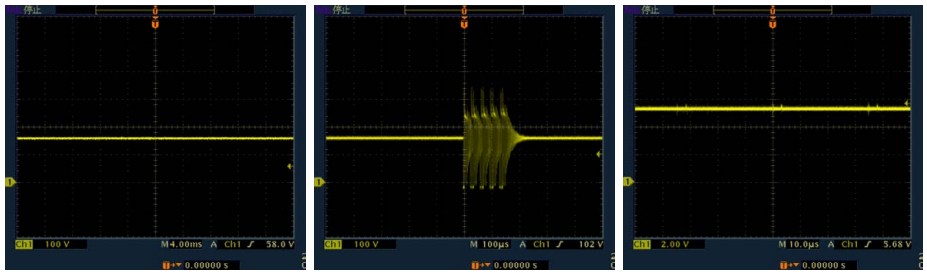

Set

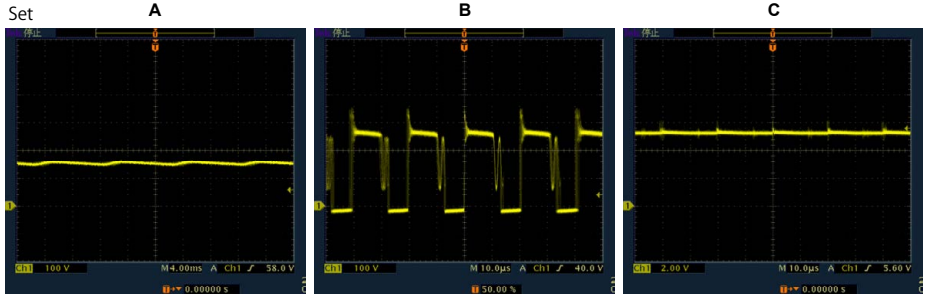

HDMI "Rx/Tx" Failure Detection

1. Prior checking

Check item(0). : Checking the HDMI connector
Checking the condition of the HDMI pin (rear/front).

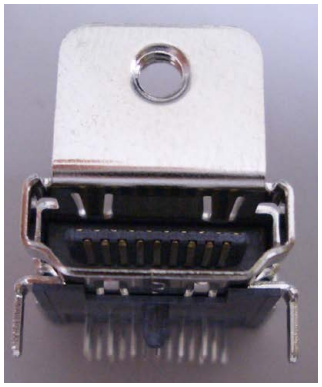

OK

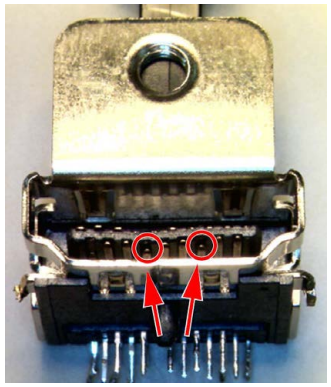

NG

Check for deformed pins.

There are deformed pins.

Replace the HDMI connector.

None of the pins are deformed.

Check by following the flow chart for "3. Starting detecting the point of failure".
NOTE :
After checking troubleshooting "3. HDMI/DVI", check "3. Starting detecting the point of failure".

2. Preparations for checking HDMI Switcher reception/transmission register

2-1. Necessary devices

1) Check the product settings.
2-a) Player with an HDMI terminal
2-b) TV with an HDMI terminal (* NOTE : Do not use a computer monitor.)
3) Windows PC
4) Serial communication software "**termite.exe**"
(Download the software from http://www.compuphase.com/software_termite.htm and install it.)
5) HDMI cable
6) RS-232C Straight cable
7) 8U-2120100S WRITING KIT
8) oscilloscope

2-2. Device Connection Method

Connect the TV and the AVR to the player using an HDMI cable and connect the AVR to the PC through an RS-232C cable as shown in Figure 1.

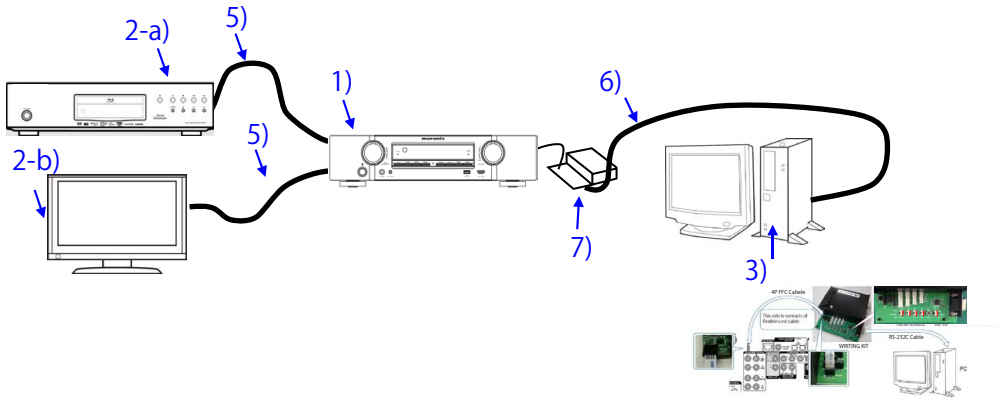

Figure 1 Device Connection Method (NR1508)

2-3. Device configuration method

PC settings : Execute the serial communication program, Termite.exe.

After executing Termite.exe, click [Settings].

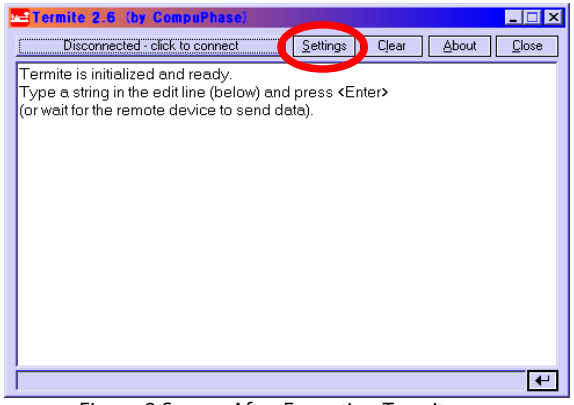

Figure 2 Screen After Executing Termite.exe

The serial port setup screen will be displayed.
Configure the settings as shown in Figure 3 and click the "**OK**" button.

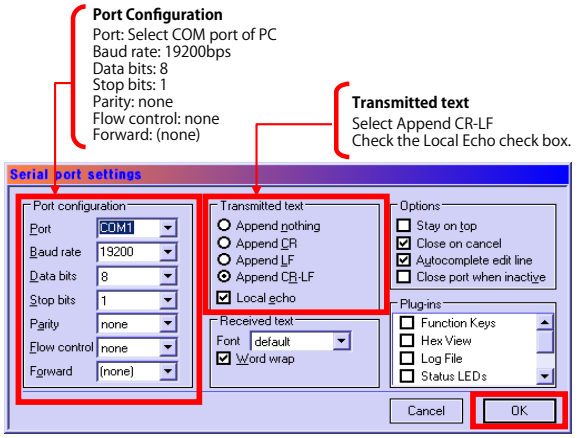

Figure 3 Serial Port Setup Screen

Click the [click to connect] button to start communication.
After a connection is established successfully, the display of the button name will change as shown in Figure 4.

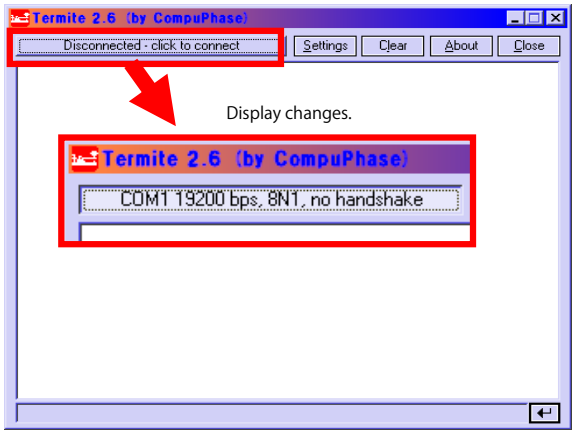

Figure 4 Change of the Display of the Communication Start Button Name

TV settings : Switch to the HDMI input in the AVR connection.
Player settings : Turn the unit power on and configure it to play disks.
AVR settings : While the power is On, hold down buttons "**M-DAX**" and "**ZONE2 SOURCE**" for at least 3 seconds.
(Continue to press and hold the buttons until all segments of the FLD volume illuminate.)
※ When the power is turned on after initialization, "**Setup Assistant**" will be displayed.
After exiting "**Setup Assistant**" execute the above.

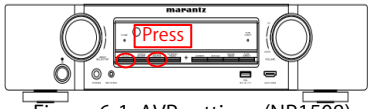

Figure 6-1. AVR settings (NR1508)

Figure 6 FLD Display When Set

When the settings are correct, the following message will be displayed in the window of Termite.
[00]Start Sub CPU Log Mode
****
(**** is a version of Sub CPU.)

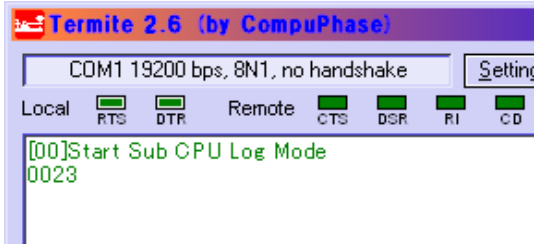

Figure 7 Display of Termite When AVR is Set

The setup is now complete.

Method for sending commands
Enter the command in the transmission command entry section, click the [Send] button and send the command.

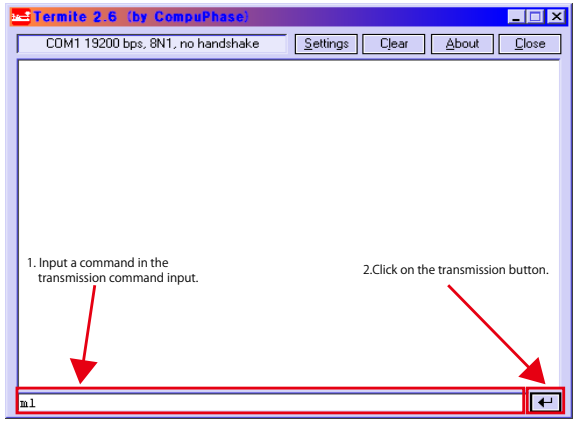

Figure 8 Method for Sending Termite Commands

3. Starting detecting the point of failure

Check item(1).
Check the power supply status and communication status with the CPU of each device.
Start in HDMI Diagnostics mode and follow the procedures below.

(1) Start in HDMI Diagnostics mode

While the power is on, hold down buttons "**M-DAX**" and "**DIMMER**" for at least 3 seconds.

```
HDMI DIAGNOSTICS
```

↓ "**HDMI DIAGNOSTICS**" is displayed.

When the mode has switched, start Hardware check.

```
Hardwarecheck...
```

↓

(2-1) Display when an Error Code is displayed.

```
Err:  H1-XX
```

↕ Alternating display.

```
Contact support
```

Check the Error Code table items.

Error Code table

Error Code	Check item No.	Description
H1-01	Check item (5)	Communication Error with HDMI RX/Tx [U1027 : MN864788]
H1-02	Check item (10)	Communication Error with HDMI SW [U1024 : MN864787]
H1-07	Check item (12)	Communication Error with OSD [U1030 : ADV7623]
H1-08	Check item (19)	Communication Error with DSP [U1021 : ADSP21487]
H1-12	Check item (24)	Communication Error with DIR [U1040 : PCM9211]
H1-15	Check item (17)	Communication Error with OSD ROM [U1029 : MX25L3206EMI/MX25L6406EMI]

(2-2) Display when an Error is not detected.

```
1 Auto Test
```

Cancel the mode, and proceed to check item (2).

Canceling the selected mode
Press the power button to exit off the power.

Check item(2). : Check operation of the HDMI input terminal.

When the HDMI input terminal of this device is connected to the player correctly, is sound heard from the speaker?
※ When checking, turn the AV amplifier on and off after checking the connection terminal with the player. (To set the same conditions during verification of operation)

↓

Check that sound is heard from the input terminal of the HDMI 4/5.
Use any of Dolby TrueHD/DTSHD MA/PCM 8ch for the playback audio format.

NO → Is the "**DIG**" indicator illuminated on the FLD?
When the "**DIG**" indicator is illuminated, the digital audio block is faulty.
If the "DIG" indicator is not illuminated, go to check item (29).
(HDMI の Rx/Tx [MN864788] failure detection procedure)

↓ YES

Check that sound is heard from the input terminal of the HDMI 1 - 3.

NO → Go to check item (36)
(HDMI SW[MN864787] failure detection procedure)

↓ YES

Check that sound is heard from the input terminal of the FRONT AUX.

NO → Go to check item (44)
(Front HDMI Buffer IC [AD8195] failure detection procedure)

↓ YES

Check item(3). : Check operation of the HDMI output terminal.

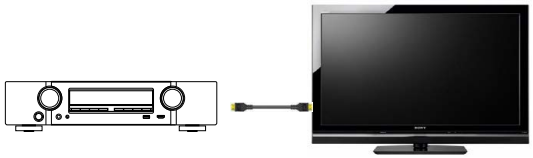

When the "**SETUP**" button on a remote control is pressed, is "**MENU**" displayed on TV which is connected to the HDMI output terminal on the AVR?

NO → Go to check item (52)
(OSD[ADV7623] failure detection procedure)

↓ YES

Check item(4). : Check operation of the HDMI output terminal.

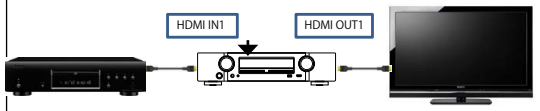

When the player is connected to the HDMI input terminals in order, are the images on the player displayed on the TV in both cases?

NO → Go to check item (61)
(Between HDMI Tx[MN864788]& OSD[ADV7623] failure detection procedure)

↓ YES

There is no problem with Rx, Tx, and GUI of HDMI as well as IC of SW.

3-1. Error Code H1-01 failure detection procedure

Checking device. (HDMI Rx/Tx)

↓

Check the power supply voltage. (HDMI Rx/Tx)

↓

Check item(5). Check the power supply voltage. :
Does the power supply voltage of the HDMI Rx/Tx [U1027] indicate the correct voltage (1.1V, 3.3V)?
The test points are as follows.

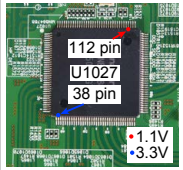

YES ↓

NO ↓

Check item(6). Check the power supply voltage. :
Check the power components [U1064, U1067, Q1082] and the pattern on the substrate.
If there is no problem, remove the HDMI Rx/Tx [U1027] from the substrate and measure the voltage at the test point of check item (5).
Is the voltage correct (1.1 V or 3.3 V)?

YES ↓

Replace with a new device.

↓

NO ↓

The power supply circuit is faulty.
Replace the PCB.

↓

Recheck from check item (1).
If it does not work, replace the PCB.

Checking the reset waveform. (HDMI Rx/Tx)

↓

Check item(7). Checking the reset waveform :
Check the waveform.
When the power is turned on, is the TP waveform correct (as shown in the figure)?

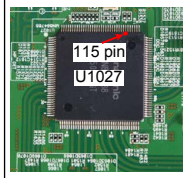

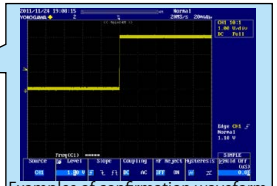

Examples of confirmation waveform
Voltage scale : 1.0V/div
Time scale : 20ms/div

NO →

Check the reset circuit between CPU [U1013] and HDMI Rx/Tx [U1027].
If there is no problem, the HDMI Rx/Tx [U1027] is faulty.
Replace with a new device.
Recheck from check item (1).
If it does not work, replace the PCB.

YES ↓

Go to next page.

Check the I2C communication line. (HDMI Rx/TX)

YES

Check item(8). Check the I2C communication line :
Check the waveform.
Is the "**I2C**" waveform of the TP HDMI Rx/Tx [U1027] correct (like the one shown in the diagram) when the power is turned on?

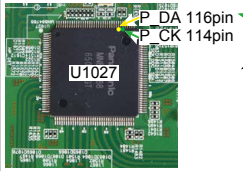

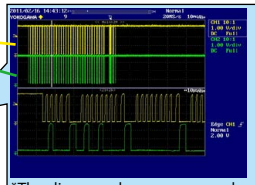

*The diagram shows an example.
(Signal patterns vary depending on the timing.)
Points for checking waveforms
- Crest value (3.3 V normally)
- Signal change
- SCL frequency (400 kHz normally)
Voltage scale : 1.0V/div
Time scale : 10us/div

NO

Check item(9). Check the I2C communication line :
Check HDMI Rx/Tx [U1027], CPU[U1013] patterns as well as soldering.
If there is no problem, go to the next step.

YES

HDMI Rx/Tx[U1027] is faulty.
Replace with a new IC.

YES

Recheck from check item (1).
If it does not work, replace the PCB.

Check the HDMI Rx/Tx.
Remove the damping resistor [R1537/R1538] of [U1027].
Is the "**I2C**" waveform correct?

NO

Check the HDMI SW.
Remove the damping resistor [R1974/R1975] of [U1024].
Is the "**I2C**" waveform correct?

YES

HDMI Rx/Tx [U1027] is faulty. Replace with a new device.

YES

HDMI SW [U1024] is faulty. Replace with a new device.

NO

The CPU [U1013] is faulty. Replace with a new device.

Recheck from check item (1).
If it does not work, replace the PCB.

3-2. Error Code H1-02 failure detection procedure

Checking device. (HDMI SW)

↓

Checking the reset waveform. (HDMI SW)

↓

Check item(10). Checking the reset waveform :
Check the waveform.
When the power is turned on, is the TP waveform correct (as shown in the figure)?

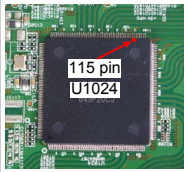

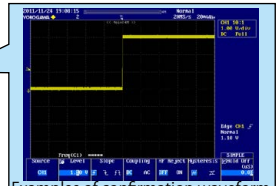

Examples of confirmation waveform
Voltage scale：1.0V/div
Time scale：20ms/div

NO → Check the reset circuit between CPU [U1013] and HDMI SW [U1024].
If there is no problem, the HDMI SW [U1024] is faulty.
Replace with a new device.

↓ YES

Check item(11). Checking the HDMI SW :
Remove the [R1974/R1975].
Is the waveform of "**I2C**" the correct waveform?

YES ↓ / NO → HDMI SW [U1024] is faulty.
Replace with a new device.

↓

Recheck from check item (1).
If it does not work, replace the PCB.

3-3. Error Code H1-07 failure detection procedure

Checking device. (OSD)

Check the power supply voltage.

Check item(12). Check the power supply voltage.
:
Does the power supply voltage of the OSD[U1030] indicate the appropriate voltage (1.8V, 3.3V)?
The test points are as follows.

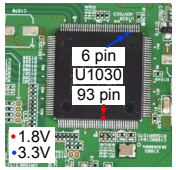

NO

Check item(13). Check the power supply voltage.
:
Check the power supply components [U1067, Q1087, U1069] on the substrate and peripheral pattern.
If there is no problem, remove the OSD [U1030] from the substrate and measure the voltage at the test point of check item (12).
Is the voltage correct (1.8 V or 3.3 V)?

YES

YES

NO

The power supply circuit is faulty.
Replace the PCB.

HDMI OSD[U1030] is faulty.
Replace with a new device.

Recheck from check item (1).
If it does not work, replace the PCB.

Checking the reset waveform.

Check item(14). Checking the reset :
Check the CPU.
When the power is turned on, is the TP waveform correct (as shown in the figure)?

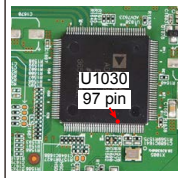

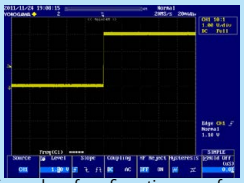

Examples of confirmation waveform
Voltage scale：1.0V/div
Time scale：20ms/div

YES

NO

Check the reset circuit between CPU [U1013] and HDMI OSD[U1030].
If there is no problem, the HDMI OSD [U1030] is faulty.
Replace with a new device.

Recheck from check item (1).
If it does not work, replace the PCB.

Go to next page.

Check the I2C communication line.

YES

Check item(15). Check the I2C communication line :
Check the CPU.
Is the "**I2C**" waveform of the HDMI OSD [U1030] correct (like the one shown in the diagram) when the power is turned on?

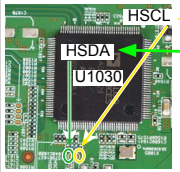

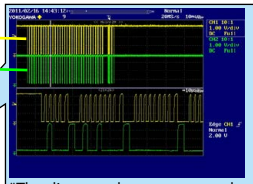

*The diagram shows an example.
(Signal patterns vary depending on the timing.)
Points for checking waveforms
- Crest value (3.3 V normally)
- Signal change
- SCL frequency (400 kHz normally)
Voltage scale：1.0V/div
Time scale：10us/div

YES

NO

Check item(16). Check the I2C communication line :
Check HDMI OSD [U1030], CPU[U1013] patterns as well as soldering.
If there is no problem, go to the next step.

Remove the damping resistor [R1622/R1606] of [U1030].
Is the "**I2C**" waveform correct?

NO

The CPU [U1013] is faulty.
Replace with a new device.

YES

OSD[U1030] is faulty.
Replace with a new device.

Recheck from check item (1).
If it does not work, replace the PCB.

3-4. Error Code H1-15 failure detection procedure

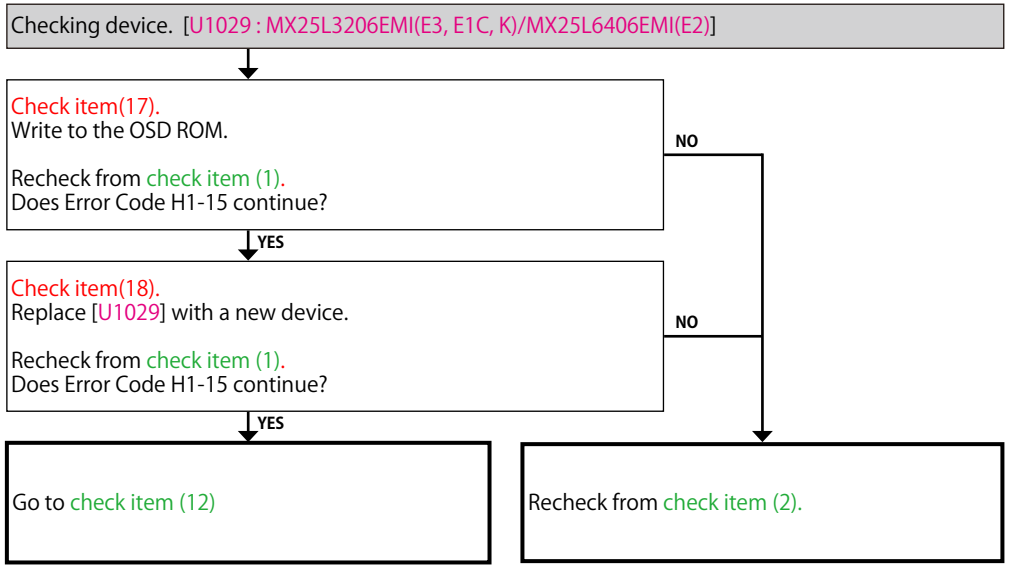

3-5. Error Code H1-08 failure detection procedure

Checking device. [U1021 : ADSP21487]

Check the power supply voltage.

Check item(19). Check the power supply voltage.
:
Does the power supply voltage of the DSP [U1021] indicate the appropriate voltage (1.0V, 3.3V)?
The test points are as follows.

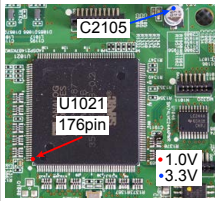

NO

Check item(20). Check the power supply voltage.
:
Check the power supply components [U1067, Q1087, U1068] on the substrate and peripheral pattern.
If there is no problem, remove the DSP [U1021] from the substrate and measure the voltage at the test point of check item (19).
Is the voltage correct (1.0 V or 3.3 V)?

YES

NO

The power supply circuit is faulty.
Replace the PCB.

YES

DSP [U1021] is faulty.
Replace with a new device.

Recheck from check item (1).
If it does not work, replace the PCB.

Checking the reset waveform.

Check item(21). Checking the reset :
Check the CPU.
When the power is turned on, is the TP waveform correct (as shown in the figure)?

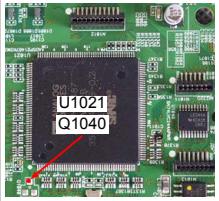

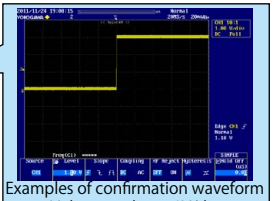

Examples of confirmation waveform
Voltage scale：1.0V/div
Time scale：20ms/div

YES

NO

Check the reset circuit between CPU [U1013] and DSP [U1021].
If there is no problem, the DSP [U1021] is faulty.
Replace with a new device.

Recheck from check item (1).
If it does not work, replace the PCB.

Go to next page.

Check the SPI communication line.

YES

Check item(22). Check the SPI communication line :
Check the CPU.
Is the "**SPI**" waveform of the TP near the DSP [U1021] correct (like the one shown in the diagram) when the power is turned on?

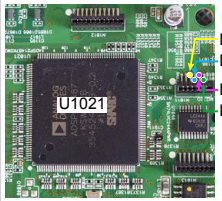

*The diagram shows an example.
(Signal patterns vary depending on the timing.)
Points for checking waveforms
- Crest value (3.3 V normally)
- Signal change
- CLOCK frequency (about 6 MHz)
Voltage scale：2.0V/div
Time scale：2us/div

YES

NO

Check item(23). Check the SPI communication line :
Check DSP [U1021], CPU[U1013] patterns as well as soldering.
If there is no problem, go to the next step.

DSP [U1021] is faulty.
Replace with a new device.

Recheck from check item (1).
If it does not work, replace the PCB.

3-6. Error Code H1-12 failure detection procedure

Checking device. [U1040 : PCM9211]

Check the power supply voltage.

Check item(24). Check the power supply voltage.
:
Does the power supply voltage of the DIR [U1040] indicate the appropriate voltage (3.3V)?
The test points are as follows.

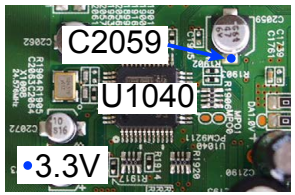

NO

Check item(25). Check the power supply voltage.
:
Check the power supply components [U1067, Q1087] on the substrate and peripheral pattern.
If there is no problem, remove the DIR [U1040] from the substrate and measure the voltage at the test point of check item (24).
Is the power supply voltage correct (3.3 V)?

YES

NO

The power supply circuit is faulty.
Replace the PCB.

YES

DIR [U1040] is faulty.
Replace with a new device.

Recheck from check item (1).
If it does not work, replace the PCB.

Checking the reset waveform.

Check item(26). Checking the reset :
Check the CPU.
When the power is turned on, is the DIR [U1040 : 34pin] waveform correct (as shown in the figure)?

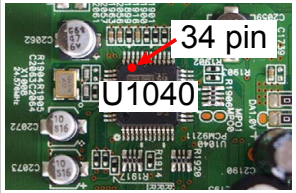

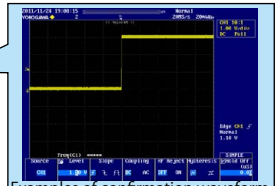

Examples of confirmation waveform
Voltage scale : 1.0V/div
Time scale : 20ms/div

YES

NO

Check the reset circuit between CPU [U1013] and DIR [U1040].
If there is no problem, the DIR [U1040] is faulty.
Replace with a new device.

Recheck from check item (1).
If it does not work, replace the PCB.

Go to next page.

Check the communication line.

YES

Check item(27). Check the communication line :
Check the CPU.
Is the waveform of the TP near the DIR [U1040] correct (like the one shown in the diagram) when the power is turned on?

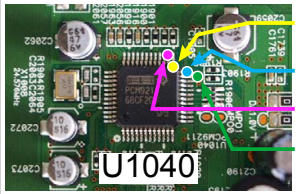

DR_CK 25pin
DR_DIN 24pin
DR_CE 26pin
DR_DOUT 23pin

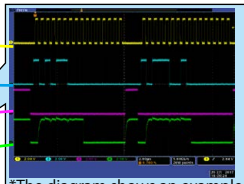

*The diagram shows an example.
(Signal patterns vary depending on the timing.)
Points for checking waveforms
- Crest value (3.3 V normally)
- Signal change
- CLOCK frequency (about 2 MHz)
Voltage scale：2.0V/div
Time scale：2us/div

YES

NO

Check item(28). Check the communication line :
Check DIR [U1040], CPU [U1013] patterns as well as soldering.
If there is no problem, go to the next step.

DIR [U1040] is faulty.
Replace with a new device.

Recheck from check item (1).
If it does not work, replace the PCB.

3-7. HDMI Rx/Tx [MN864788] failure detection procedure

Checking operation between the HDMI (Rx/Tx) device and the player

※ In order to check, connect the player to the HDMI terminal and configure the player as AVR source.
Check the sound output while turning on the player.

Checking the +5V/DDC status register (HDMI Rx/Tx)

Check item(29). Checking the 5V status register :
Send the following command from Termite.exe.

Send the command "i 0006 00FF 0001".

Move to the branch destination according to the value returned.

Example

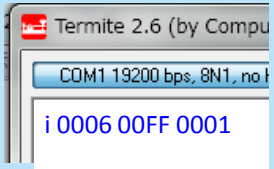

HDMI in 4/5 "00"
(Detection of 5V is not OK.)

→ Go to check item (31)

HDMI In4 "22 or 20" HDMI In5 "11 or 10"
(Detection of 5V is OK)

Check item(30). Checking the +5V/DDC status register :
Send the following command from Termite.exe.

Case of HDMI IN4
Send the command "i 0003 0054 0001".
Case of HDMI IN5
Send the command "i 0003 0024 0001".

Move to the branch destination according to the value returned.

Example

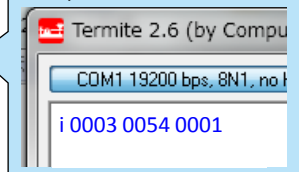

"00 or 04"
(Detection of DDC is not OK.)

→ Go to check item (32)

"22"
(Detection of DDC is OK)

→ Go to check item (33)

When the results of check item (29) are "00"
(Detection of 5V is not OK)

Check the +5V voltage. (HDMI Rx/TX)

Check item(31). Check the +5V voltage.
Does "**+5V**" at the following test point indicate 5 V? [N1019/N1020]

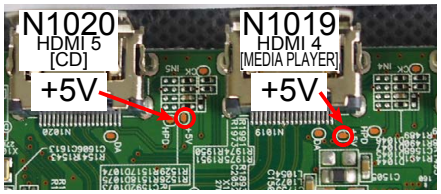

YES

HDMI Rx/Tx[U1027] is faulty.
Replace with a new device.

NO

Check for a short circuit in the 5 V line and the 5 V Switch IC [U1025].
If there is no problem, the HDMI Rx/Tx [U1027] or the 5 V Switch IC [U1025] is faulty
Replace with a new device.

Recheck from check item (2).
If it does not work, replace the PCB.

When the results of check item (30) are "00 or 04"
(Detection of DDC is not OK.)

Check the DDC line. (HDMI Rx/Tx)

Check item(32). Check the DDC line :
Are waveforms of "**CK**" and "**DA**" observed at the test point near the HDMI input terminal?

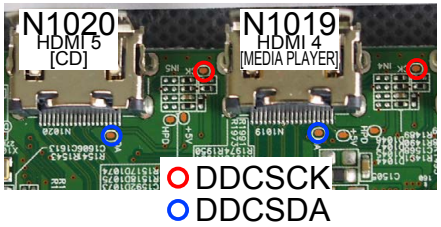

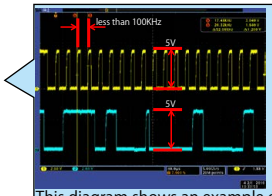

This diagram shows an example of the DDC communication waveform.
-The high level voltage is 5V.
-The frequency of the DDC CLK is 100 KHz or less.
Check at each test point.
Voltage scale：2.0V/div
Time scale：40us/div

YES

HDMI Rx/Tx[U1027] is faulty.
Replace with a new device.

NO

Check for a short circuit in the DDC line.
If there is no problem, the HDMI Rx/Tx [U1027] is faulty.
Replace with a new device.

Recheck from check item (2).
If it does not work, replace the PCB.

When the results of check item (30) are "22"
(Detection of DDC is OK.)

Checking the TMDS status register.

Check item(33). Checking register of the TMDS CLK detection status register :
Send the following command from Termite.exe.

HDMI Rx/Tx
Send the command "i 0006 00FF 0001".

When the following value is returned, go to Yes.
HDMI In4 "22" HDMI In5 "11"

When the following value is returned, go to No.
HDMI In4 "20" HDMI In5 "10"

Example

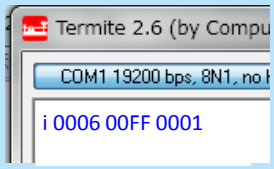

NO

HDMI In4
80/81/83/84/86/87/89/90pin

HDMI In5
93/94/96/97/99/100/102/103pin

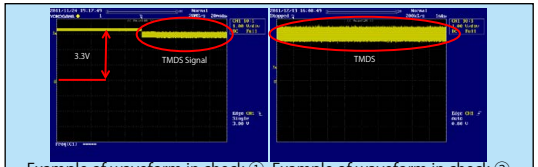

Example of waveform in check ①
Voltage scale：1.0V/div
Time scale：20ms/div

Example of waveform in check ②
Voltage scale：1.0V/div
Time scale：1s/div

Check item (34). Checking the TMDS input waveform. :
Check the TMDS waveform at the following test point.
Is the waveform like the sample?

YES

HDMI Rx/Tx[U1027] is faulty.
Replace with a new device.

NO

Check for a short circuit in the pattern of the TMDS line of the HDMI Rx/Tx [U1027] from the HDMI input terminal.
If there is no problem, the HDMI Rx/Tx [U1027] is faulty. Replace with a new device.

Recheck from check item (2).
If it does not work, replace the PCB.

YES

Check item(35). Checking the audio signal output :
Check the audio signal waveform at the following test point.
Is the waveform like the sample?

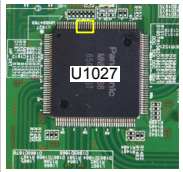

129/131/132/133/134/135/136pin

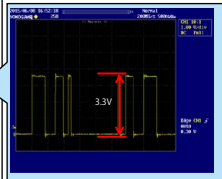

The diagram shows an example of the waveform of pin 129. (I2S0 Data)
Waveform check points
- Crest value (3.3 V normally)
- Signal change
Check the waveform of each pin.
Voltage scale：1.0V/div
Time scale：20ms/div

YES

The digital audio block is faulty.
Check the digital audio device.
Check "**AUDIO**" in troubleshooting.
If it does not work, replace the PCB.

NO

HDMI Rx/Tx[U1027] is faulty.
Replace with a new device.

3-8. HDMI SW [MN864787] failure detection procedure

Checking operation between the HDMI (HDMI SW) device and the player

※ In order to check, connect the player to the HDMI terminal and configure the player as AVR source.
Check the sound output while turning on the player.

Checking the +5V/DDC status register (HDMI SW)

Check item(36). Checking the 5V status register :
Send the following command from Termite.exe.

Send the command "i 002E 00FF 0001".

Move to the branch destination according to the value returned.

Example

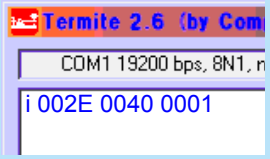

HDMI In1/In2/In3 "00"
(Detection of 5V is not OK.) → Go to check item (38)

HDMI In1 "44 or 40" HDMI In2 "22 or 20" HDMI In3 "11 or 10"
(Detection of 5V is OK)

Check item(37). Checking the DDC status register :
Send the following command from Termite.exe.

Case of HDMI IN1
Send the command "i 002B 0084 0001".
Case of HDMI IN2
Send the command "i 002B 0054 0001".
Case of HDMI IN3
Send the command "i 002B 0054 0001".
Move to the branch destination according to the value returned.

Example

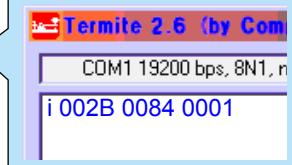

"00 or 04"
(Detection of DDC is not OK.) → Go to check item (39)

"22"
(Detection of DDC is OK) → Go to check item (40)

When the results of check item (36) are "00"
(Detection of 5V is not OK)

↓

Check the +5V voltage. (HDMI SW)

↓

Check item(38). Check the +5V voltage :
Does "**+5V**" at the following test point indicate 5 V? [N1015/N1016/N1017]

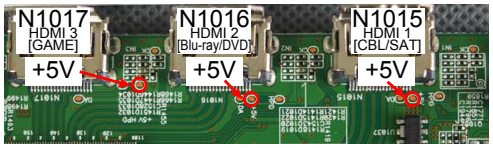

YES ↓

HDMI SW [U1024] is faulty.
Replace with a new device.

↓

Recheck from check item (2).
If it does not work, replace the PCB.

NO ↓

Check for a short circuit in the 5 V line and the 5 V Switch IC [U1025].
If there is no problem, the HDMI SW [U1024] is faulty.
Replace with a new device.

↓

Recheck from check item (2).
If it does not work, replace the PCB.

When the results of check item (37) are "00 or 04"
(Detection of DDC is not OK.)

↓

Check the DDC line. (HDMI SW)

↓

Check item(39). Check the DDC LineHPD line :
Are waveforms of "**CK**" and "**DA**" observed at the test point near the HDMI input terminal [N1015/N1016/N1017]?

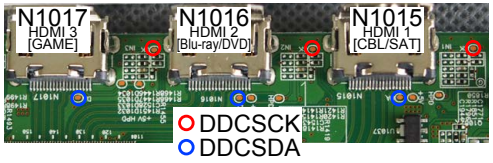

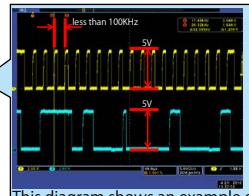

This diagram shows an example of the DDC communication waveform.
-The high level voltage is 5V.
-The frequency of the DDC CLK is 100 KHz or less.
Check at each test point.
Voltage scale：2.0V/div
Time scale：40us/div

YES ↓

HDMI SW [U1024] is faulty.
Replace with a new device.

↓

Recheck from check item (2).
If it does not work, replace the PCB.

NO ↓

Check for a short circuit in the DDC line.
If there is no problem, the HDMI SW [U1024] is faulty.
Replace with a new device.

↓

Recheck from check item (2).
If it does not work, replace the PCB.

When the results of check item (37) are "22"
(Detection of DDC is OK.)

Checking the TMDS status register (HDMI SW)

Check item(40). Checking register of the TMDS CLK detection status register :
Send the following command from Termite.exe.

HDMI Rx/Tx
Send the command "i 002E 00FF 0001".

When the following value is returned, go to Yes.
HDMI In1 "44" HDMI In2 "22" HDMI In3 "11"

When the following value is returned, go to No.
HDMI In1 "00" HDMI In2 "00" HDMI In3 "00"

Example

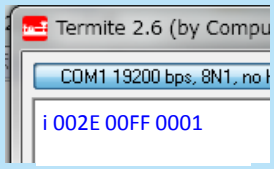

NO

YES

Checking the TMDS status register (HDMI SW -> HDMI Rx/Tx)

Check item(42). Checking register of the TMDS CLK detection status register :
Send the following command from Termite.exe.

Send the command "i 0006 00FF 0001".

When the following value is returned, go to Yes.
"CC or 44"

When the following value is returned, go to No.
"other"

Example

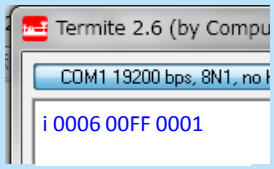

YES

Check item (43). Checking the TMDS input waveform. :
Check the TMDS waveform at the following test point.
Is the waveform like the sample?

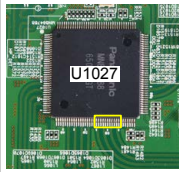

55/56/58/59/61/62/64/65pin

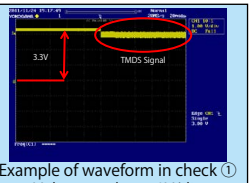

Example of waveform in check ①
Voltage scale：1.0V/div
Time scale：20ms/div

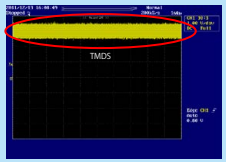

Example of waveform in check ②
Voltage scale：1.0V/div
Time scale：1s/div

YES

HDMI Rx/Tx[U1027] is faulty.
Replace with a new device.

NO

HDMI SW [U1024] is faulty.
Replace with a new device.

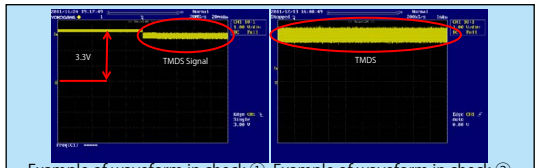

Example of waveform in check ①
Voltage scale：1.0V/div
Time scale：20ms/div

Example of waveform in check ②
Voltage scale：1.0V/div
Time scale：1s/div

Check item (41). Checking the TMDS input waveform. :
Check the TMDS waveform at the following test point.
Is the waveform like the sample?

HDMI In3
137/138/140/141/143/144/146/147pin

HDMI In2
124/125/127/128/130/131/133/134pin

HDMI In1
83/84/86/87/89/90/92/93pin

YES

HDMI SW [U1024] is faulty.
Replace with a new device.

NO

Check for a short circuit in the pattern of the TMDS line of the HDMI SW [U1024] from the HDMI input terminal.
If there is no problem, the HDMI SW [U1024] is faulty.
Replace with a new device.

Recheck from check item (2).
If it does not work, replace the PCB.

3-9. Front HDMI Buffer IC [AD8195] failure detection procedure

Checking operation between the HDMI (Front HDMI Buffer) and the player

※ In order to check, connect the player to the HDMI terminal and configure the player as AVR source.
Check the sound output while turning on the player.

↓

Check the power supply voltage. (HDMI Buffer)

↓

Check item(44). Check the power supply voltage. :
Does the power supply voltage of the Front HDMI FFC base [N1014] indicate the correct voltage (5V)?
The test points are as follows.

YES ↓ NO

Check item(45). Check the power supply voltage. :
Check the FETSW and peripheral pattern.
If there is no problem, remove the Front HDMI FFC from the substrate and measure the voltage at the test point of check item (44).
Is the power supply voltage correct (5 V)?

YES ↓

Front HDMI Buffer [U3000] is faulty.
Replace with a new device.

↓

Recheck from check item (2).
If it does not work, replace the PCB.

NO ↓

Replace the FET SW[Q1070] and recheck from check item (40). If it does not work, replace the PCB.

↓

Checking the +5V/DDC status register (Front HDMI Buffer)

↓

Check item(46). Checking the 5V status of the register :
Send the following command from Termite.exe.

Send the command "i 002E 00FF 0001".

Move to the branch destination according to the value returned.

Example

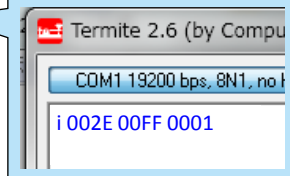

"00"
(Detection of 5V is not OK.) → Go to check item (48)

"88 or 80"
(Detection of 5V is OK)

↓

Check item(47). Checking the status of the register :
Send the following command from Termite.exe.

Send the command "i 002B 00B4 0001".

Move to the branch destination according to the value returned.

Example

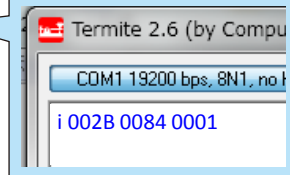

"00 or 04"
(Detection of DDC is not OK.) → Go to check item (49)

"22"
(Detection of DDC is OK) → Go to check item (50)

When the results of check item (46) are "00"
(Detection of 5V is not OK.)

Check the +5V voltage. (Front HDMI Buffer)

Check item(48). Check the +5V voltage.
Does "+5 V" at the following test point indicate 5V?
The test points are as follows. (HDMI SW[U1024]

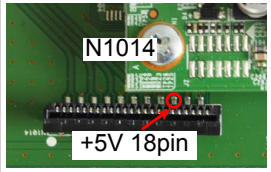

NO → Check for a short circuit in the 5V line, the Front HDMI FFC, and the 5V Switch [U1025].
If there is no problem, the HDMI SW1[U1024] or 5VSwitch[U1025] is faulty.
Replace with a new device.

YES

HDMI SW [U1024] is faulty.
Replace with a new device.

Recheck from check item (2).
If it does not work, replace the PCB.

When the results of check item (47) are "00 or 04"
(If the DDC are not OK)

Check the DDC Line. (Front HDMI Buffer)

Check item(49). Check the DDC line :
Does "**DDCCL**" and "**DDCDA**" signal of the HDMI SW [U1024] indicate 5 V?
The test points are as follows.

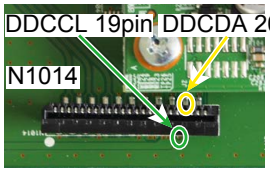

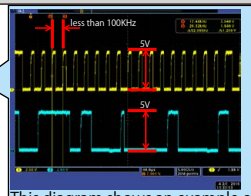

This diagram shows an example of the DDC communication waveform.
-The high level voltage is 5V.
-The frequency of the DDC CLK is 100 KHz or less.
Check at each test point.
Voltage scale：2.0V/div
Time scale：40us/div

NO → Check for a short circuit in the DDC line and check the Front HDMI FFC.
If there is no problem, the Front HDMI Buffer [U3000] is faulty.
Replace with a new device.

YES

HDMI SW [U1024] is faulty.
Replace with a new device.

Recheck from check item (2).
If it does not work, replace the PCB.

When the results of check item (47) are "22"
(Detection of DDC is OK)

↓

Checking the TMDS status register

↓

Check item(50). Check the TMDS CLK detection status of the register.
Send the following command from Termite.exe.

Send the command "i 002E 00FF 0001".

When the following value is returned, go to Yes.
"88"

When the following value is returned, go to No.
"80"

Example

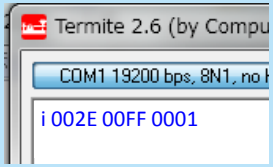

NO →

YES ↓

Check item (51). Checking the TMDS input waveform. :
Check the TMDS waveform at the following test point.
Is the waveform like the sample?

HDMI SW[U1024]

70/71/73/74/76/77/79/80pin

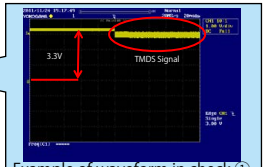

Example of waveform in check ①
Voltage scale：1.0V/div
Time scale：20ms/div

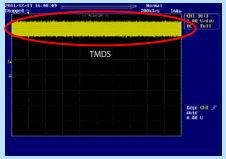

Example of waveform in check ②
Voltage scale：1.0V/div
Time scale：1s/div

YES ↓

HDMI SW [U1024] is faulty.
Replace with a new device.

↓

NO ↓

HDMI SW [U1024] is faulty.
Replace with a new device.

↓

Check for a short circuit in the TMDS line and the Front HDMI FFC.
If there is no problem, the Front HDMI Buffer [U3000] is faulty.
Replace with a new device.

↓

Recheck from check item (2).
If it does not work, replace the PCB.

3-10. OSD [ADV7623] failure detection procedure

Checking the TMDS status register (OSD -> HDMI Rx/Tx)

Check item(52). Check the TMDS CLK detection status of the register.
Send the following command from Termite.exe.

Send the command "i 0006 00FF 0001".

When the following value is returned, go to Yes.
"C8"

When the following value is returned, go to No.
"other"

Example

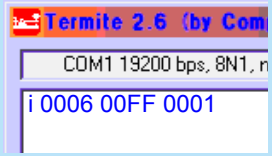

NO

Check item (53). Checking the TMDS input waveform. :
Check the TMDS waveform at the following test point.
Is the waveform like the sample?

HDMI SW[U1024]

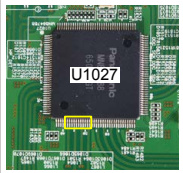

42/43/45/46/48/49/51/52pin

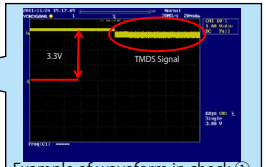

Example of waveform in check ①
Voltage scale：1.0V/div
Time scale：20ms/div

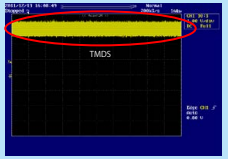

Example of waveform in check ②
Voltage scale：1.0V/div
Time scale：1s/div

YES

Check the connection between the HDMI OUT terminal and the TV.
Go to check item (54)

YES

HDMI Rx/Tx[U1027] is faulty.
Replace with a new device.

NO

OSD[U1030] is faulty.
Replace with a new device.

Recheck from check item (3).
If it does not work, replace the PCB.

Check the connection between the HDMI OUT terminal and the TV.
Connect the HDMI OUT terminal and the TV, and then turn on the TV and check the following items.

↓

Checking the HPD/RXSENSE status register. (HDMI TX -> Monitor)

↓

Check item(54). Check the HPD and RXSENSE register value of the HDMI TX device. :
Send the following command from Termite.exe.

Send the command "i 0000 0040 0001".

Move to the branch destination according to the value returned.

Example

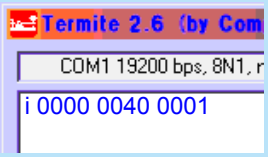

"30"
(Detection of HPD is OK / Detection of RXSENSE is OK)
→ Go to check item (55)

"10"
(Detection of HPD is OK / Detection of RXSENSE is not OK)
→ Go to check item (58)

"20"
(Detection of HPD is not OK / Detection of RXSENSE is OK)
→ Go to check item (59)

"00"
(Detection of HPD is not OK / Detection of RXSENSE is not OK)
→ Go to check item (60)

When the results of check item (54) are "30"
(Detection of HPD is OK / Detection of RXSENSE is OK)

Checking the EDID register. (Monitor)

Check item(55). Check the Monitor EDID :
① Unplug the AC cord. Plug the AC cord into a power outlet.
② Send the transmission command "m_1" from Termite.exe.
Are the first eight bytes of the returned value "00FFFFFFFFFFFF00"?

Example

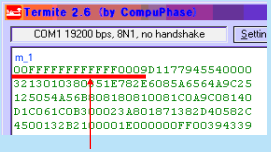

The first eight bytes are normally "00FFFFFFFFFFFF00".
*If the AVR and the TV are not connected via HDMI, the correct register value cannot be verified.

YES

NO

Check item(56). Checking the TMDS :
Check the TMDS waveform at the following test point.

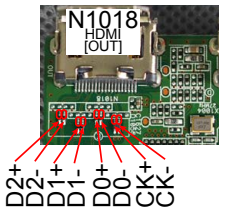

Check item(57). Check communication with the monitor :
Are waveforms of "**DDCSCK**" and "**DDCSDA**" observed at the test point near the HDMI output terminal [N1018]?

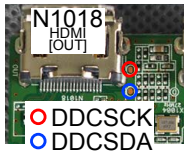

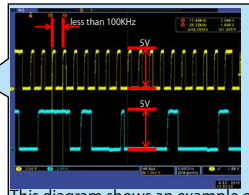

This diagram shows an example of the DDC communication waveform.
-The high level voltage is 5V.
-The frequency of the DDC CLK is 100 KHz or less.
Check at each test point.
Voltage scale：2.0V/div
Time scale：40us/div

YES

NO

Check for a short circuit in the TMDS line.
If there is no problem, the HDMI Rx/Tx (U1027) is faulty.
Replace with a new device.

YES

NO

HDMI Rx/Tx [U1027] is faulty.
Replace with a new device.

HDMI Rx/Tx [U1027] is faulty.
Replace with a new device.

HDMI Rx/Tx [U1027] is faulty.
Replace with a new device.

Recheck from check item (3).
If it does not work, replace the PCB.

When the results of check item (54) are "10"
(Detection of HPD is OK / Detection of RXSENSE is not OK)

Check the RXSENSE. (Monitor)

Check item(58). Checking the RXSENSE. :
Does the test point of RXSENSE close to the HDMI output terminal [N1018] indicate the 3.3 V?

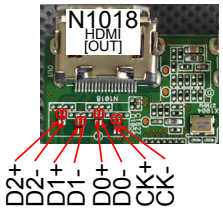

YES

NO

Check for a short circuit in the TMDS line.
If there is no problem, the HDMI Rx/Tx (U1027) is faulty.
Replace with a new device.

HDMI Rx/Tx [U1027] is faulty.
Replace with a new device.

Recheck from check item (3).
If it does not work, replace the PCB.

When the results of check item (54) are "20"
(Detection of HPD is not OK / Detection of RXSENSE is OK)

Check the HPD. (Monitor)

Check item(59). Checking the HPD :
Does the voltage of HPD test point close to the HDMI output terminal [N1018] indicate "**Hi**" (3-5V)?

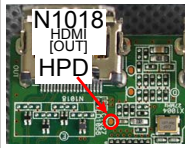

YES

NO

Check for a short circuit in the HPD line.
If there is no problem, the HDMI Rx/Tx (U1027) is faulty.
Replace with a new device.

HDMI Rx/Tx [U1027] is faulty.
Replace with a new device.

Recheck from check item (3).
If it does not work, replace the PCB.

When the results of check item (54) are "00"
(Detection of HPD is not OK / Detection of RXSENSE is not OK)

↓

Check the RXSENSE/HPD. (Monitor)

↓

Check item(60). Checking the HPD and RXSENSE. :
Does the test point of RXSENSE close to the HDMI output terminal [N1018] indicate the (3.3V)?
Does the voltage of HPD test point close to the HDMI output terminal [N1018] indicate "**Hi**" (3-5V)?

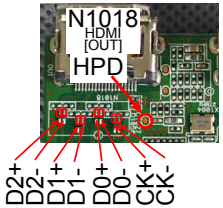

YES ↓ NO

Check for a short circuit in the TMDS/ HPD line.
If there is no problem, the HDMI Rx/Tx (U1027) is faulty.
Replace with a new device.

HDMI Rx/Tx [U1027] is faulty.
Replace with a new device.

↓

Recheck from check item (3).
If it does not work, replace the PCB.

3-11. Fault detection procedure between HDMI Rx/Tx [MN864788] & OSD [ADV7623].

※ In order to check, connect the player to the HDMI terminal and configure the player and TV as AVR source.
Check the sound output while turning on the player and TV.

Checking the TMDS status register (Rx/Tx -> OSD)

Check item(61). Check the TMDS CLK detection status of the register.
Send the following command from Termite.exe.

Send the command "i 00B2 006A 0001".

When the following value is returned, go to Yes.
"11"

When the following value is returned, go to No.
"00"

Example

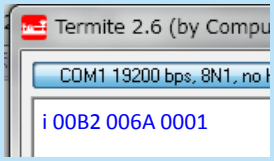

YES

Check item (62). Checking the TMDS input waveform. :
Check the TMDS waveform at the following test point.
Is the waveform like the sample?

23/24/26/27/29/30/32/33 pin

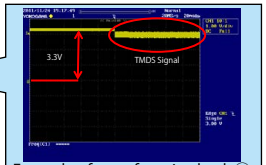

Example of waveform in check ①
Voltage scale：1.0V/div
Time scale：20ms/div

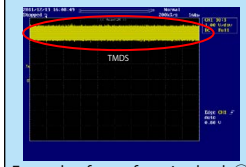

Example of waveform in check ②
Voltage scale：1.0V/div
Time scale：1s/div

YES

NO

HDMI Rx/Tx [U1027] is faulty.
Replace with a new device.

OSD[U1030] is faulty.
Replace with a new device.

Recheck from check item (4).
If it does not work, replace the PCB.

4. Device implementation location

DIGITAL (A SIDE)

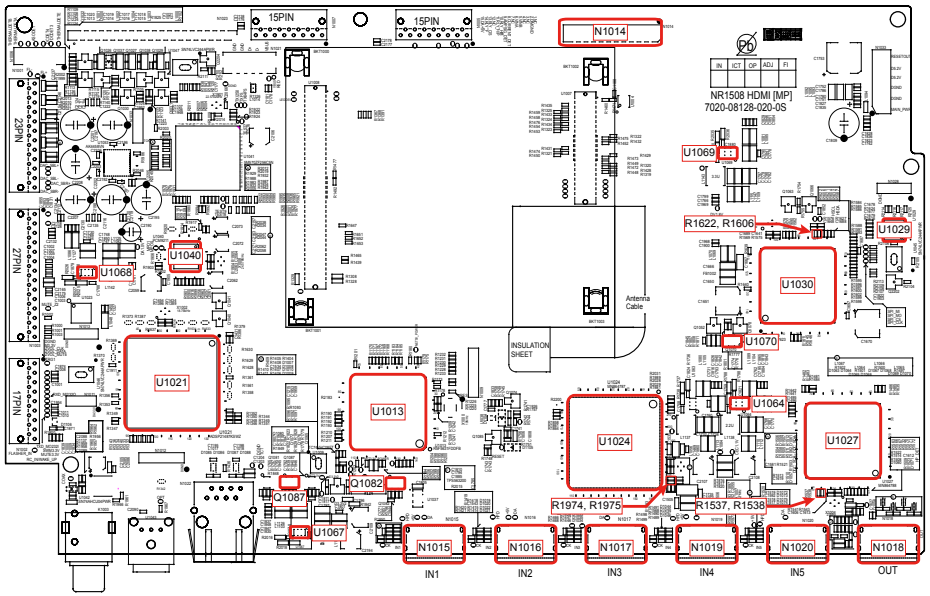

DIGITAL (B SIDE)

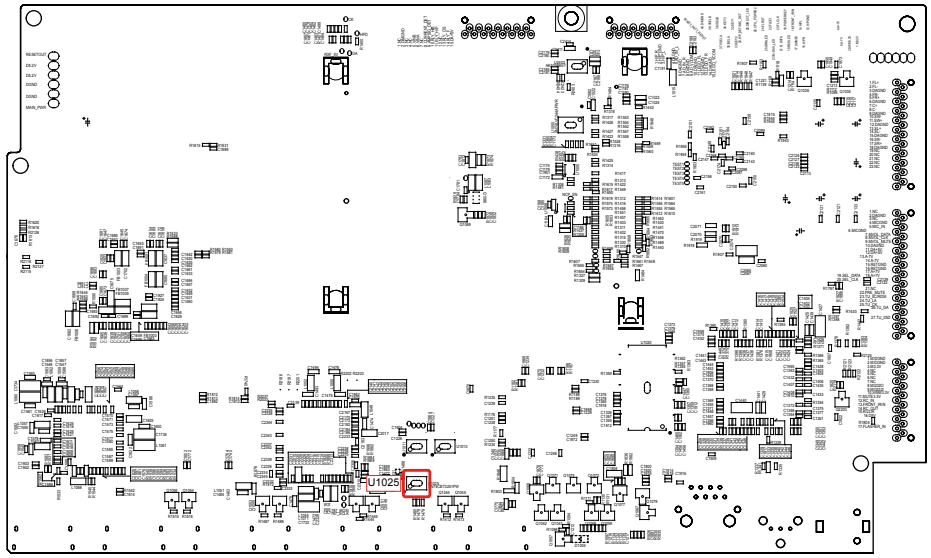

F-HDMI (A SIDE)

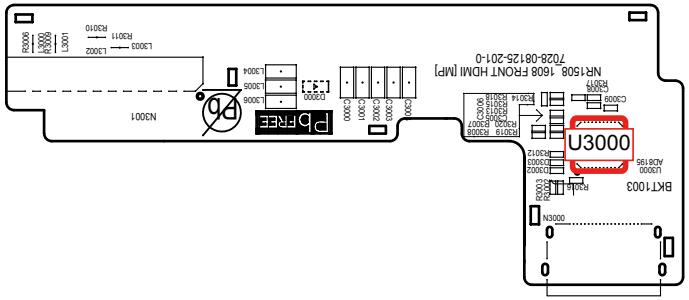

CLOCK FLOW & WAVE FORM IN DIGITAL BLOCK

WAVE FORM

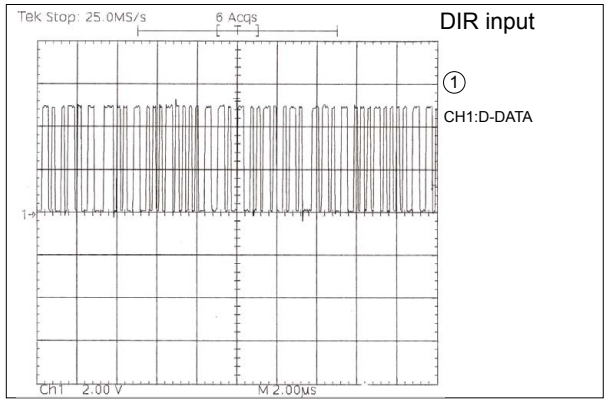

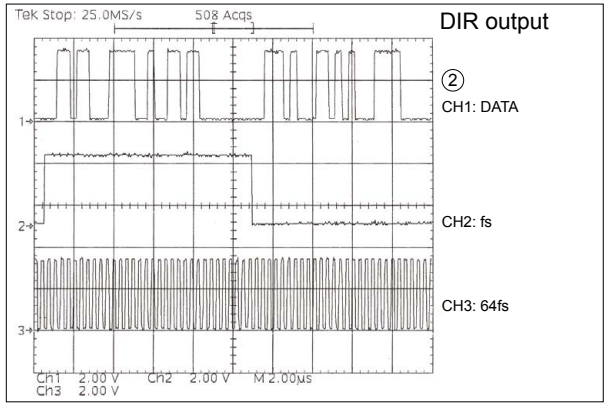

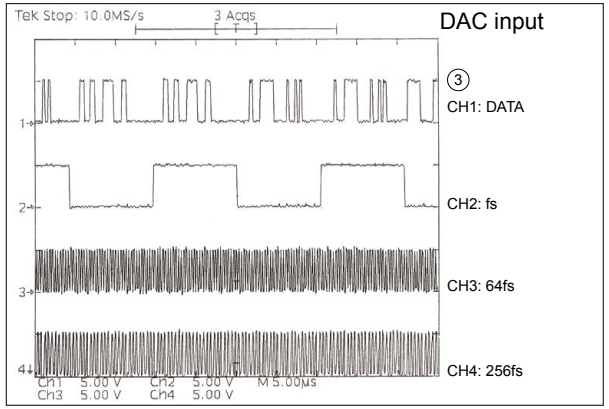

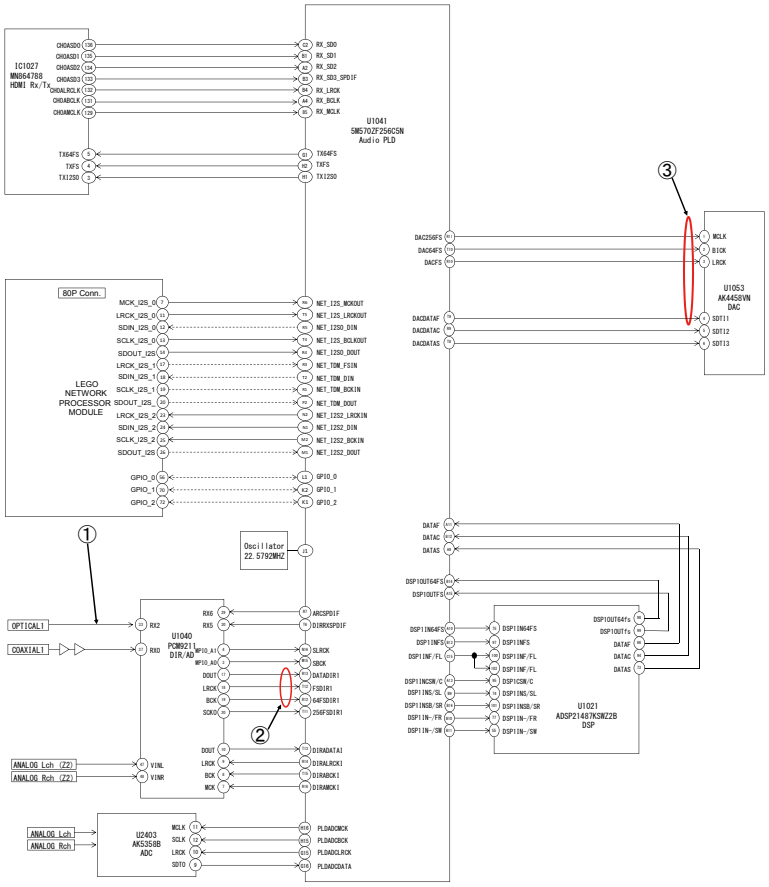

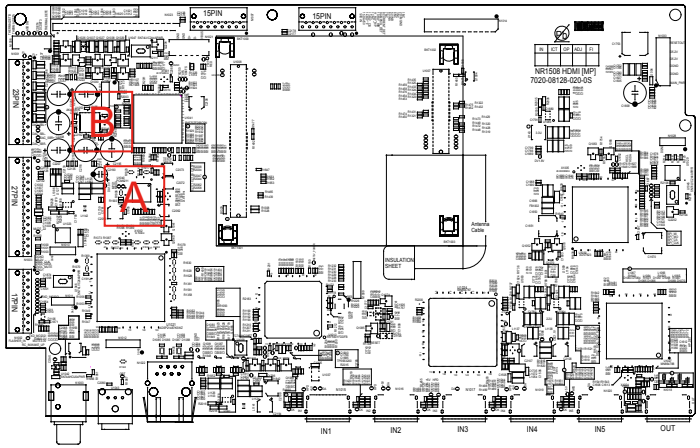

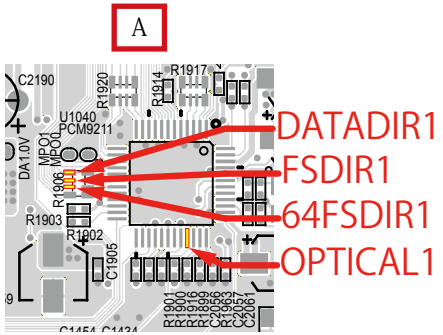

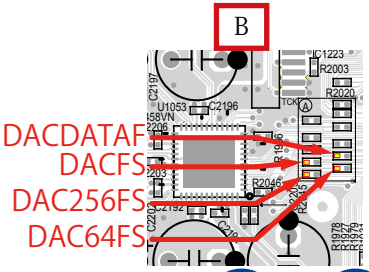

SPECIAL MODE

Special mode setting button

※ No. 1 - 4, 6 - 8 : While holding down buttons "**A**", "**B**" and "**C**" simultaneously, press the power button to turn on the power.
※ No. 5, 9 : While the power is on, hold down buttons "**A**" and "**B**" for at least 3 seconds .

No.	Mode	Button A	Button B	Button C	Descriptions
1	Version Display (u-COM / DSP Error Display)	DIMMER	STATUS	-	Displays the version of firmware such as the main firmware or DSP. Errors that have occurred are displayed. (See 1. Version Display Mode)
2	PANEL / REMOTE LOCK Selection Mode	M-DAX	DIMMER	-	Start this unit in the PANEL/REMOTE LOCK selection mode so that PANEL LOCK and Remote Lock can be switched between On and Off. (See 2. PANEL / REMOTE LOCK Selection Mode) ·PANEL LOCK Mode (with Volume) Disables reception from all keys and encoders on the front panel except the power button (including the volume). ·PANEL LOCK Mode (without Volume) Disables reception from all keys and encoders on the front panel except the power button and volume encoder. ·PANEL LOCK mode is turned off Releases the PANEL LOCK.
3	Selecting the Mode for Service-related	TUNER PRESET CH +	STATUS	-	This is a display for turning on each service-related mode. Service-related modes: No. 3-1 - No. 3-4 (See 3-1. Selecting the Mode for Service-related)
3-1	Check the Video/Audio path Mode	↑	↑	-	This is a special mode for service confirmation used during repair work to simplify the confirmation work for the Audio channel / video channel. (See Service Path Check Mode)
3-2	Protection history display mode	↑	↑	-	Displays the protection occurrence history. (See 3-2. Protection History Display Mode)
3-3	Operation Info Mode	↑	↑	-	Displays the accumulated operating time of the unit, the number of times the power was switched on, and the number of occurrences of each protection. (See 3-3. Operation Info Mode)
3-4	TUNER STEP Mode (U and N model only)	↑	↑	-	Enables reception STEP of the ANALOG TUNER to be changed. (See 3-4. TUNER STEP mode (U / N only))
4	Protection Pass Mode	DIMMER	STATUS	SOUND MODE	Enables the power to be turned on when protection detection is disabled. (See 4. Protection Pass Mode)
5	Network Initialization Mode	TUNER PRESET CH +	DIMMER	-	Network module backup data is initialized. (See 5. Network Initialization Mode)
6	User Initialization Mode	M-DAX	TUNER PRESET CH +	-	Initialize the backup data for the MCU and network module. (Settings for the Installer Setup are not initialized.)
7	Factory Initialization Mode	TUNER PRESET CH +	INTERNET RADIO	-	Initialize the backup data only for MCU. (Settings for the Installer Setup are initialized) (Network function settings are not initialized.) (See CAUTION IN SERVICING.)
8	Clearing the Operation Info	DIMMER	INTERNET RADIO	-	Clear the accumulated operating time of the unit, the number of times the power was switched on, and the number of occurrences of each protection. (See 6. Clearing the Operation Info)
9	HDMI Diagnostics Mode	M-DAX	DIMMER	-	This mode is used to identify and solve the cause when there is a connectivity issue with this unit and an HDMI device. For details on the operating methods and diagnosis procedures, see the HDMI Diagnostics and Troubleshooting guide issued on SDI.

⚠2 **NOTE :** If the two Indicator Lights at the bottom right of the FLD display " -88 ", this means that the unit has entered the special developer's mode. In this case, the RS-232C communication is not available. To release this special mode, press and hold the "**M-DAX**" and "**PRESET CH +** " buttons for 3 seconds or more while the power is ON. The RS-232C communication is available when the two Indicator Lights at the bottom right of the FLD go out.

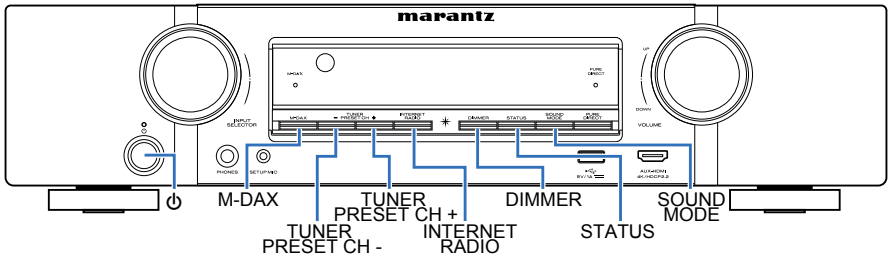

1. Version Display Mode

1.1. Actions

Version information is displayed when the device is started in this mode.

1.2. Starting up

While holding down buttons "**DIMMER**" and "**STATUS**" simultaneously, press the power button to turn on the power.
then press the "**STATUS**" button to display the information in section 1.3 on the display.
※ The version list is also displayed on GUI while the version is displayed on the display.

1.3. Display Order

Error information(See "1.4. Error display") → ① Model destination information → ② Serial Number → ③ Firmware Package → ④ Main μ -com → ⑤ Main 1st Boot Loader → ⑥ DSP → ⑦ Audio PLD → ⑧ GUI SFLASH → ⑨ HIMG → ⑩ HEOS Version → ⑪ HEOS Build → ⑫ HEOS Module → ⑬ HEOS Configuration → ⑭ HEOS Locale → ⑮ Ether Mac Address → ⑯ WiFi Mac Address → ⑰ BT Mac Address

①Model destination information :

```
MR1508 ＼
```

＼ : Region (U, N, K, F)

②Serial Number :

```
SN**************
```

③Firmware Package :

```
Package     :****
```

④Main μ-com :

```
M:**************
```

⑤Main 1st Boot Loader :

```
Main FBL :**.**
```

⑥DSP ROM :

```
DSP         :**.**
```

⑦Audio PLD :

```
Audio PLD:**.**
```

⑧GUI SFLASH :

```
GUI    :@@$＼****
```

@ : Model code,
$: Brand code (Non=0, De=1, Mz=2, Mc=3),
＼ : Region code (U=1, N=2, K=5, F=4, ALL=0),
* : version

⑨HIMG :

```
HIMG :********
```

⑩HEOS Version :

```
HEOS Version
```

↓"Press "**STATUS**" button.

```
*.***.***
```

⑪HEOS Build :

```
HEOS Build
```

↓"Press "**STATUS**" button.

```
******
```

⑫HEOS Module :

```
HEOS Module
```

↓"Press "**STATUS**" button.

```
***
```

⑬HEOS Config :

```
HEOS Config
```

↓"Press "**STATUS**" button.

```
Production
```

⑭HEOS Locale :

```
HEOS Locale
```

↓"Press "**STATUS**" button.

```
*****
```

⑮Ether MAC Address :

```
*Ether MAC
```

↓"Press "**STATUS**" button.

```
*******-*******
```

⑯Wi-Fi MAC Address :

```
*Wi-Fi MAC
```

↓"Press "**STATUS**" button.

```
*******-*******
```

⑰Bluetooth MAC Address :

```
*BT MAC Address
```

↓"Press "**STATUS**" button.

```
******-******
```

1.4. Error display

See the table below for descriptions of the displayed errors and countermeasures for these.
If multiple errors occur, only one item is displayed.
The priority order is ②, ③, ④, ①.

Condition	States	Display	TROUBLE SHOOTING
① Firm Check NG	The model name, brand name and region information written in the firmware are compared to the region settings in the PCB. This error is displayed if the information does not match. " ▲ " is displayed as the first character if the firmware is not correct (see the illustrations on the right).	FIRM ERROR ▲M:********** ▲DSP :**.** ▲Audio PLD:**.** ▲GUI :********	•Check the resistor for setting the region(R1524 / 1525 DIGITAL PCB). •Write the firmware for the correct region.
② DIR NG	This error is displayed if there is no response from the DIR.	DIR ERROR 01	•Check the DIR (U1040, DIGITAL PCB) and surrounding circuits.
③ DSP NG	The DSP FLAG0 port does not enter "**Hi**" status while booting a DSP code even after resetting DSP.	DSP ERROR 01	•Check the DSP (U1073, DIGITAL PCB) and surrounding circuits.
	The DSP FLAG0 port does not enter "**Hi**" status before issuing a DSP command.	DSP ERROR 02	
	Setting WRITE to "**Lo**" does not set ACK to "**Hi**" during DSP data reading.	DSP ERROR 03	
	Setting REQ to "**Lo**" does not set ACK to "**Lo**" during DSP data reading.	DSP ERROR 04	
	Setting WRITE to "**Hi**" does not set ACK to "**Hi**" during DSP data writing.	DSP ERROR 05	
	Setting REQ to "**Lo**" does not set ACK to "**Lo**" during DSP data writing.	DSP ERROR 06	
④ EEPROM NG	An error occurred in a checksum of the EEPROM(*** is a block address number).	BACKUP ERROR	

1.5. Version Display in the Setup Menu

Follow the steps below to display the firmware information.

(1) Press the "**SETUP**" button on the remote control.
(2) Select "**General** - **Information** - **Firmware**".

The version information is displayed as a 16-digit number as shown in the screenshot below.

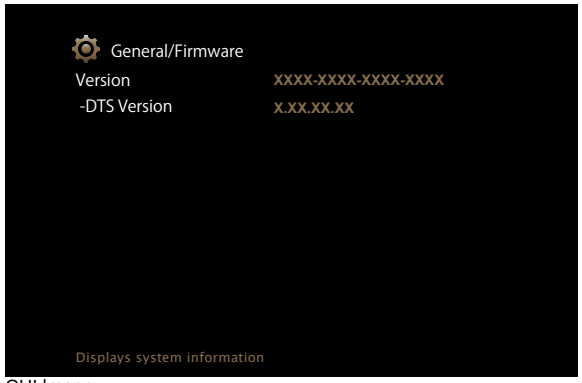

GUI Image

This 16-digit number comprises a part of the version number of each device and module.
Numerics and version numbers correspond as shown below.

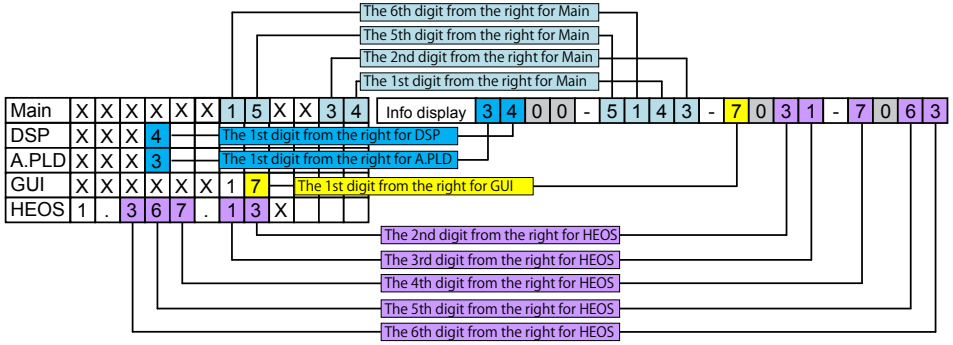

※ The firmware version numbers and this 16-digit version information are written in the Service Information.
※ Replace as follows for the 5th to 7th digits of HEOS version.
X.XXX.X → X.XXX.00X
X.XXX.XX → X.XXX.0XX
X.XXX.XXX → X.XXX.XXX

2. PANEL / REMOTE LOCK Selection Mode

2.1. Actions

Switch the PANEL LOCK and REMOTE LOCK modes between on and off.

2.2. Starting up

While holding down buttons "**M-DAX**" and "**DIMMER**" simultaneously, press the power button to turn on the power.
Select the desired mode using the "**TUNER PRESET CH+**" button, then press the "**STATUS**" button to confirm.

2.3. Displaying and Selecting Each Mode

The information shown on the display switches each time the "**TUNER PRESET CH+**" button is pressed.
Press the "**STATUS**" button to set the currently displayed mode and restart the device.
The setting with "*" is selected for each mode.

①

The buttons on the unit and the master volume knob does not function.

②

The buttons on the unit does not function.

③

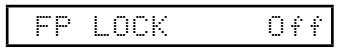

The PANEL LOCK mode is turned off.

④

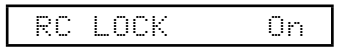

The device cannot be operated by the remote control.

⑤

The REMOTE LOCK mode is turned off.

3-1. Selecting the Mode for Service-related

3-1.1. Actions

Select diagnostic mode (service path check mode), protection history display mode, or Operation Info mode or TUNER STEP mode.

3-1.2. Starting up

While holding down buttons "**TUNER PRESET CH+**" and "**STATUS**" simultaneously, press the power button to turn on the power.
Select the desired mode using the "**TUNER PRESET CH+**" button, then press the "**STATUS**" button to confirm.

3-1.3. Displaying and Selecting Each Mode

The information shown on the display switches each time the "**TUNER PRESET CH+**" button is pressed.
Press the "**STATUS**" button to set the currently displayed mode and restart the device.

①

Service Path Check Mode : See "DIAGNOSTIC MODE"
The Video and Audio paths can be checked.
This function is convenient for confirming problem paths in the product and checking the paths after repairing.

↓

②

The protection history can be checked.

↓

③

Operation Info for the unit can be checked.

↓

④ U and N model only

Enables reception STEP of the ANALOG TUNER to be changed.

↓

3-1.4. Canceling the selected mode

Press the power button to turn off the power.

3-2. Protection History Display Mode

3-2.1. Actions

This mode enables the unit to record and display the event when the THERMAL, ASO or DC protection is activated.
If protections have been activated multiple times, the latest protection operation is recorded.

3-2.2. Starting up

While holding down buttons "**TUNER PRESET CH+**" and "**STATUS**" simultaneously, press the power button to turn on the power.
Select the "**2. PROTECTION**" using the "**TUNER PRESET CH+**" button, then press the "**STATUS**" button then to confirm.

3-2.3. Protection information and displays

· Press the "**STATUS**" button in Protection History Display Mode.
· The protection history can be checked.

(a) If no protections has occurred.

(b) ASO (if the last protection is ASO)

Cause A short circuit occurred between the speaker terminals, or speakers with an impedance outside the rating were connected.
Note : Short circuits in speaker terminals or speakers can be identified.
If the power is turned on in the abnormal state, protection is activated after around 6 seconds and the power is turned off.

(c) DC (if the last protection is DC)

Cause : DC output of the power amplifier is abnormal.
If the power is turned on in the abnormal state, protection is activated after around 6 seconds and the power is turned off.

(d) THERMAL (if the last protection is THERMAL(A) or THERMAL(B) or THERMAL(E))

Cause : Abnormal heat sink temperature.
If the power is turned on under abnormal conditions, the protection function works immediately and the power is turned off.

(e) Case of CURRENT (when the last protection incident is CURRENT protection)

Cause : An over current flowed in power amp.
If the power is turned on in the abnormal state, protection is activated after around 90 seconds and the power is turned off.

Caution : These protections may also be activated due to other factors such as disconnection of connectors or operations around the microcomputer.
After viewing the above protection history, press the "**STATUS**" button to return to the normal display.

3-2.4. Clearing the Protection History

There are two ways to clear the protection history.

(a) Activate Protection History Display Mode. Press the "**STATUS**" button to display the protection history. Press and hold the "**DIMMER**" button for 3 seconds.

Press and hold the "**DIMMER**" button for 3 seconds.

The above message is displayed and the protection history is cleared.

(b) Initialize this unit. (See "Initializing This Unit")

※ Use the method in **3-2.4. (a)** if you do not want to erase your settings from this unit.

Warning Displays by POWER LED

If the power is turned Off while a protection is being detected, the POWER LED flashes in red to warn you depending on the protection status as follows.

(a) ASO/DC protection: Flashes at 0.5-second intervals (0.25 seconds lit, 0.25 seconds unlit)
(b) THERMAL (A/B/E) protection: Flashes at 2-second intervals (1 seconds lit, 1 seconds unlit)
(c) CURRENT protection: Flashes at 4-second intervals (2 seconds lit, 2 seconds unlit)

3-3. Operation Info Mode

3-3.1. Actions

This mode enables the unit to display the accumulated operating time, power On count and each protection count.

3-3.2. Starting up

While holding down buttons "**TUNER PRESET CH+**" and "**STATUS**" simultaneously, press the power button to turn on the power.
Select the "**4. OP INFO**" using the "**TUNER PRESET CH+**" button, then press the "**STATUS**" button then to confirm.

3-3.3. Operations

Press the "**STATUS**" button after starting up this device in Operation Info mode.
The following information is displayed in the following order.

(a) Accumulated operating time

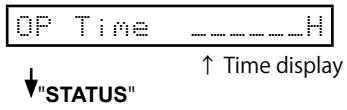

(b) Power On count

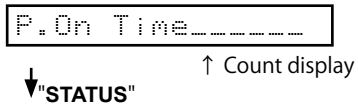

(c) DC / ASO Protection count

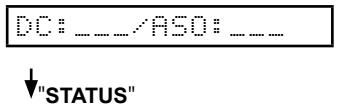

(d) Thermal Protection (A/B) count

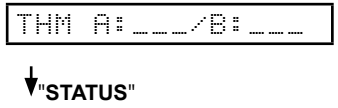

(e) Thermal Protection (E) count

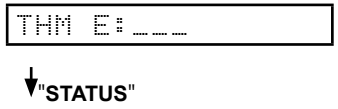

(f) Current Protection count

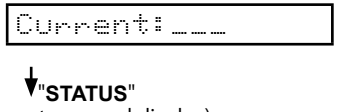

(Returns to normal display)

3-4. TUNER STEP mode (U / N only)

3-4.1. Actions

This is a special mode for enabling reception STEP of the ANALOG TUNER to be changed.

3-4.2. Starting up

While holding down buttons "**TUNER PRESET CH+**" and "**STATUS**" simultaneously, press the power button to turn on the power.
Select the "**5. TUNER FRQ SET**" using the "**TUNER PRESET CH+**" button, then press the "**STATUS**" button then to confirm.

3-4.3. Displays

Start up this unit in TUNER STEP mode, select the desired option using the "**TUNER PRESET CH+**" button, then enter using the "**STATUS**" button.
The following information is displayed in the following order.

(a) AM9 kHz / FM50 kHz is selected

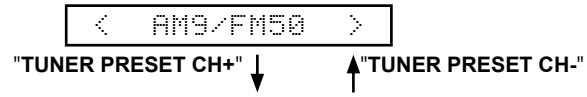

(b) AM10 kHz / FM200 kHz is selected

(c) Press the power button to turn off the power.
(d) Press the power button to turn on the power.

4. Protection Pass Mode

4.1. Actions

• This mode allows the power to be turned on without activating protections.
• This mode functions in the same way as normal power-on, except that protections are not activated.
• When using the protection pass mode, do not connect speakers to the speaker terminals.

4.2. Operations

While holding down buttons "**DIMMER**", "**STATUS**" and "**SOUND MODE**" simultaneously, press the power button to turn on the power.

The device returns to the normal display message after the following is displayed.

This is displayed for 5 seconds before returning to the normal display.

5. Network Initialization Mode

5.1. Actions

The following items are initialized.

(1) Network setup
(2) Friendly Name
(3) Auto Update setting
(4) Allow Update setting
(5) Time Zone setting
(6) Queue list
(7) Internet Radio recently played station
(8) Quick Select playback station
(9) AirPlay Password
(10) Bluetooth Pairing History

5.2. Operations

When the power is on and the input source is HEOS Music, press and hold the "**TUNER PRESET CH+** " and "**DIMMER**" buttons for more than 3 seconds.

Initializing Display

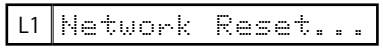

Complete Display

This is displayed for 5 seconds before returning to the normal display.

6. Clearing the Operation Info

6.1. Actions

• Displays the accumulated operating time of the unit, the number of times the power was switched on, and the number of occurrences of each protection.

6.2. Operations

Remove all input/output terminals and the AC plug.
Connect the AC plug again and place the product in standby mode.
While holding down buttons "**DIMMER**" and "**INTERNET RADIO**" simultaneously, press the power button to turn on the power.

When "**PRODUCT MODE**" appears on the display, release the button and press the "**power**" button and "**ZONE2 ON/OFF**" to place the product in standby mode.

Service Path Check Mode

1.1. Actions

This function is convenient for confirming problem paths in the product and checking the paths after repairing.
The Video and Audio paths can be checked.
The backup data is not rewritten.

1.2. Starting up

While holding down buttons "**TUNER PRESET CH+**" and "**STATUS**" simultaneously, press the power button to turn on the power.
Select the "**1. SERVICE CHECK**" using the "**TUNER PRESET CH+**" button, then press the "**STATUS**" button then to confirm.
The "**TUNED**", "**STEREO**" and "**RDS**" segments are lit in this mode.

1.3. Canceling diagnostic mode

Press the power button to turn off the power.

1.4. Selecting items to check

Press the ① button to switch between video items and audio items.
Press the ② or ③ button to select the previous or next item.

	The unit			Remote control unit		
Actions	①	②	③	①	②	③
	Audio ⇔ Video	PREVIOUS	NEXT	Audio ⇔ Video	PREVIOUS	NEXT
Button	DIMMER	TUNER PRESET -	TUNER PRESET +	SLEEP	CURSOR ◄	CURSOR ►

1.5. Audio system confirmation items

See the block diagram fig.XXth.

Paths to be confirmed			Display	Settings	What to confirm
1	Analog	fig.01	A01:ANALOG PASS	Input Source : CBL/SAT Input Mode : Analog (fixed) Sound mode : DIRECT MAIN ZONE : On	• Analog input ⇒ Speaker output (Front L/R) (※ The input source can be switched to any source except CBL/SAT.)
2	DIGITAL (MAIN)	fig.02a fig.02b	A02:DIGITAL	Input Source : CBL/SAT Input Mode : DIGITAL (fixed) Sound mode : MULTI CH STEREO Speaker Config ALL Speaker = Small / SW = Yes MAIN ZONE : On	• Digital input ⇒ Speaker output (Front L/R, Center, Surround L/R) • Digital input ⇒ Pre OUT 出力 (Front L/R, Center, Surround L/R, Subwoofer) (※ The input source can be switched to any source except CBL/SAT.)
3	HDMI	fig.03a fig.03b	A05:HDMI	Input Source : CBL/SAT Input Mode : HDMI (fixed) Sound mode : STEREO MAIN ZONE : On	• HDMI input ⇒ Speaker output (Front L/R) (※ The input source can be switched to any source except CBL/SAT.)
4	Analog AD (MAIN)	fig.04a fig.04b	A06:AD	Input Source : CBL/SAT Input Mode : Analog (fixed) Sound mode : MULTI CH STEREO Vol 60dB Speaker Config ALL Speaker = Small / SW = Yes MAIN ZONE : On	• Analog input ⇒ Speaker output (Front L/R, Center, Surround L/R) • Analog input ⇒ Speaker output, SW(20Hz) (Front L/R, Center, Surround L/R, Subwoofer) (※ The input source can be switched to any source except CBL/SAT.) (※ Volume 60 is the value when Absolute settings are used. The value is -20 when Relative settings are used)

1.6. Confirmation items for the video system

See the block diagram fig.XXth.

Paths to be confirmed			Display	Settings	What to confirm
1	Analog Video pass	fig.05	V01:VIDEO PASS	Input Source : CBL/SAT Video Conversion (IP Scaler) : OFF, All sources MAIN ZONE : On	• CVBS input ⇒ CVBS output (※ The input source can be switched to any source except CBL/SAT.)
2	HDMI pass (MAIN ZONE)	fig.06	V03:HDMI PASS	Input Source : CBL/SAT MAIN ZONE : On	• HDMI input (MAIN function) ⇒ HDMI output (MAIN) (※ The input source can be switched to any source except CBL/SAT.)
3	HDMI CEC (Control Monitor : HDMI Monitor1)	fig.07	V04:HDMI CEC	Input Source : CBL/SAT HDMI Control : On MAIN ZONE : On	• When the power supply of a TV is put in the standby mode, make sure that the power supply of this unit is also put in the standby mode. (※ The input source can be switched to any source except CBL/SAT.) • The ARC path can also be checked (check this using the TV input source).
4	HDMI Audio (Audio : AVR)	fig.08a fig.08b	V05:H.AUDIO-AVR	Input Source : CBL/SAT HDMI Control : Off HDMI Audio : AVR (if checking the audio output from AVR)	• HDMI input (PCM, DolbyDigital, DTS) ⇒ Speaker output. • HDMI input(HD audio) ⇒ Speaker output. (※ The input source can be switched to any source except CBL/SAT.)
5	HDMI Audio (Audio : TV)	fig.09	V06:H.AUDIO-TV	HDMI Audio : TV (if checking the audio output from TV)	• HDMI input (PCM, DolbyDigital, DTS) ⇒ HDMI output (audio output from connected TV) (※ The input source can be switched to any source except CBL/SAT.)
6	GUI	fig.10	V07:GUI MENU ON	Input Source : CBL/SAT Resolution : "AUTO", All sources Setup Menu : On MAIN ZONE : On	• GUI display ⇒ HDMI output. (※ The input source can be switched to any source except CBL/SAT.)

fig.01

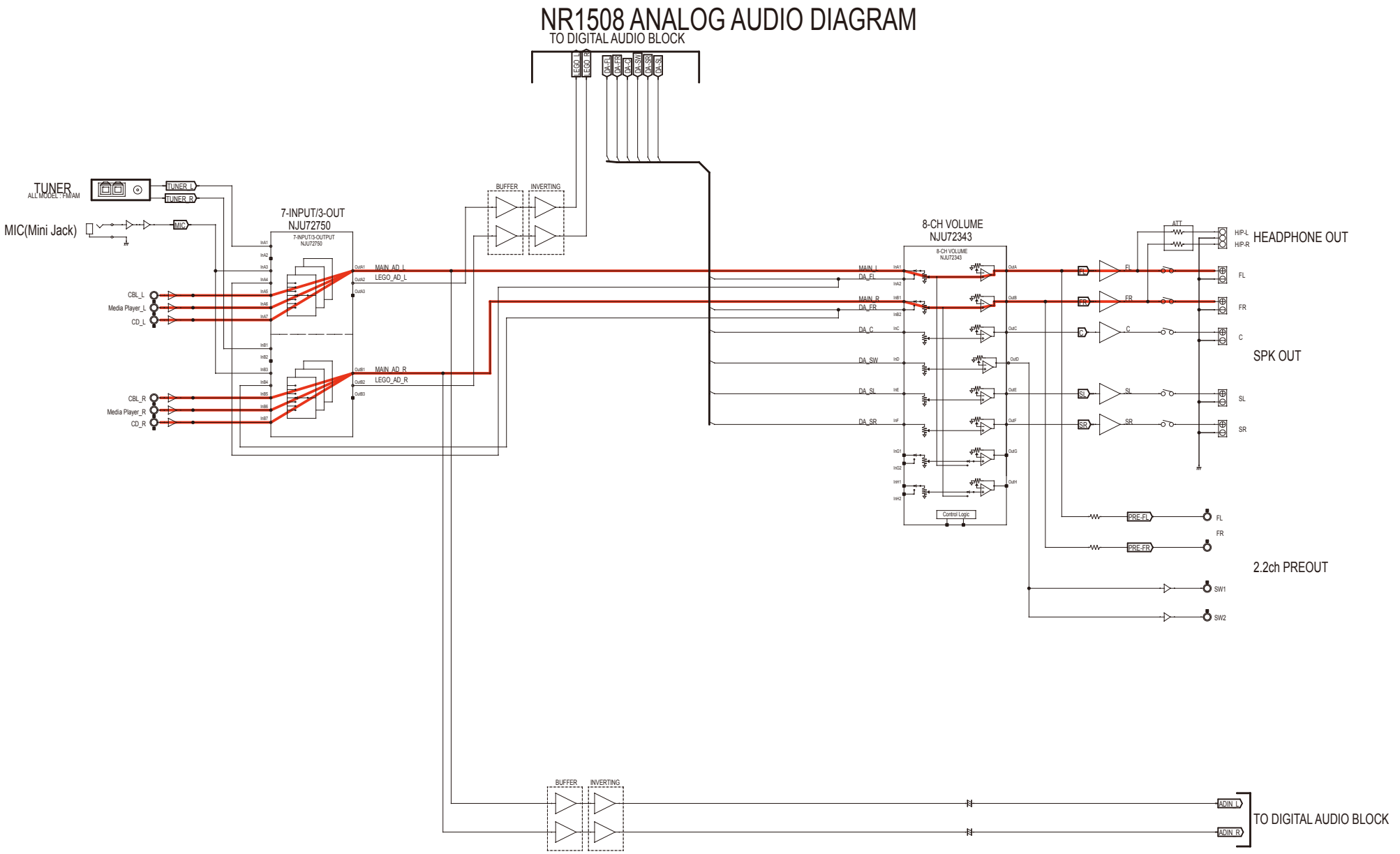
NR1508 ANALOG AUDIO DIAGRAM
TO DIGITAL AUDIO BLOCK
LEGO_L
LEGO_R
DA_FL
DA_FR
DA_C
DA_SW
DA_SR
DA_SL
TUNER
ALL MODEL : FM/AM
TUNER_L
TUNER_R
MIC(Mini Jack)
MIC
7-INPUT/3-OUT
NJU72750
7-INPUT/3-OUTPUT
NJU72750
BUFFER
INVERTING
CBL_L
Media Player_L
CD_L
CBL_R
Media Player_R
CD_R
MAIN_AD_L
LEGO_AD_L
MAIN_AD_R
LEGO_AD_R
8-CH VOLUME
NJU72343
8-CH VOLUME
NJU72343
MAIN_L
DA_FL
MAIN_R
DA_FR
DA_C
DA_SW
DA_SL
DA_SR
Control Logic
ATT
HP-L
HP-R
HEADPHONE OUT
FL
FR
C
SPK OUT
SL
SR
PRE-FL
PRE-FR
2.2ch PREOUT
SW1
SW2
BUFFER
INVERTING
ADIN_L
ADIN_R
TO DIGITAL AUDIO BLOCK

fig.02a

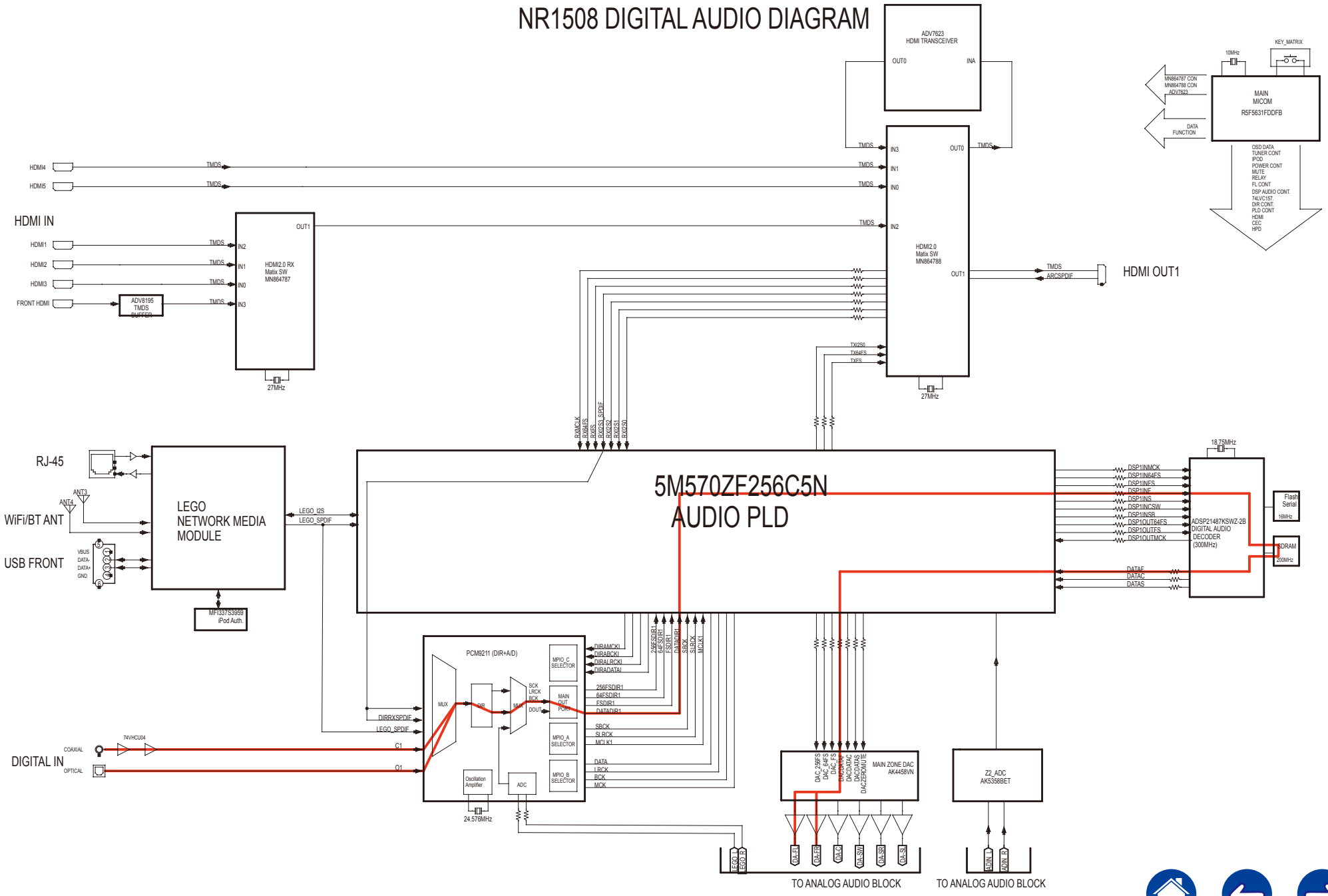
NR1508 DIGITAL AUDIO DIAGRAM
ADV7623
HDMI TRANSCEIVER
OUT0
INA
HDMI4
HDMI5
TMDS
HDMI IN
HDMI1
HDMI2
HDMI3
FRONT HDMI
ADV8195
TMDS
BUFFER
HDMI2.0 RX
Matix SW
MN864787
IN2
IN1
IN0
IN3
OUT1
27MHz
HDMI2.0
Matix SW
MN864788
OUT0
OUT1
ARCSPDIF
HDMI OUT1
KEY_MATRIX
10MHz
MAIN
MICOM
R5F5631FDDFB
DATA
FUNCTION
OSD DATA
TUNER CONT
IPOD
POWER CONT
MUTE
RELAY
FL CONT
DSP AUDIO CONT.
74LVC157.
DIR CONT.
PLD CONT
HDMI
CEC
HPD
RJ-45
WiFi/BT ANT
USB FRONT
LEGO
NETWORK MEDIA
MODULE
MFI337S3959
iPod Auth.
LEGO_I2S
LEGO_SPDIF
5M570ZF256C5N
AUDIO PLD
18.75MHz
ADSP21487KSWZ-2B
DIGITAL AUDIO
DECODER
(300MHz)
Flash
Serial
16MHz
SDRAM
200MHz
DATAF
DATAC
DATAS
PCM9211 (DIR+A/D)
MUX
DIR
MAIN
OUT
PORT
MPIO_C
SELECTOR
MPIO_A
SELECTOR
MPIO_B
SELECTOR
Oscillation
Amplifier
ADC
24.576MHz
DIRRXSPDIF
LEGO_SPDIF
DIGITAL IN
COAXIAL
OPTICAL
74VHCU04
C1
O1
MAIN ZONE DAC
AK4458VN
Z2_ADC
AK5358BET
TO ANALOG AUDIO BLOCK
TO ANALOG AUDIO BLOCK

fig.02b

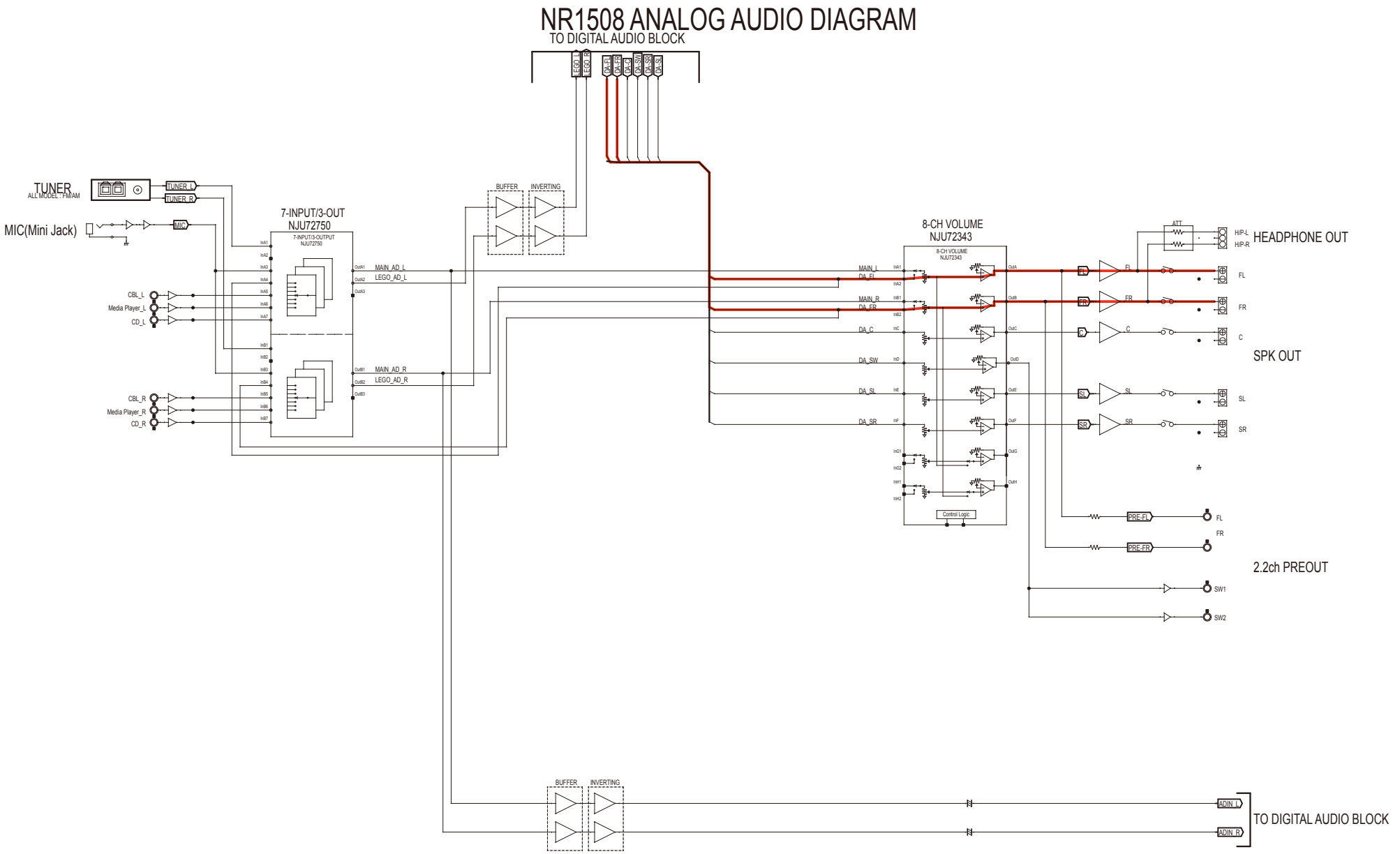
NR1508 ANALOG AUDIO DIAGRAM
TO DIGITAL AUDIO BLOCK
LEGO_L
LEGO_R
DA_FL
DA_FR
DA_C
DA_SW
DA_SR
DA_SL
TUNER
ALL MODEL : FM/AM
TUNER_L
TUNER_R
MIC(Mini Jack)
MIC
7-INPUT/3-OUT
NJU72750
CBL_L
Media Player_L
CD_L
CBL_R
Media Player_R
CD_R
MAIN_AD_L
LEGO_AD_L
MAIN_AD_R
LEGO_AD_R
BUFFER
INVERTING
8-CH VOLUME
NJU72343
MAIN_L
MAIN_R
Control Logic
ATT
HP-L
HP-R
HEADPHONE OUT
FL
FR
C
SL
SR
SPK OUT
PRE-FL
PRE-FR
2.2ch PREOUT
SW1
SW2
ADIN_L
ADIN_R
TO DIGITAL AUDIO BLOCK

fig.03a

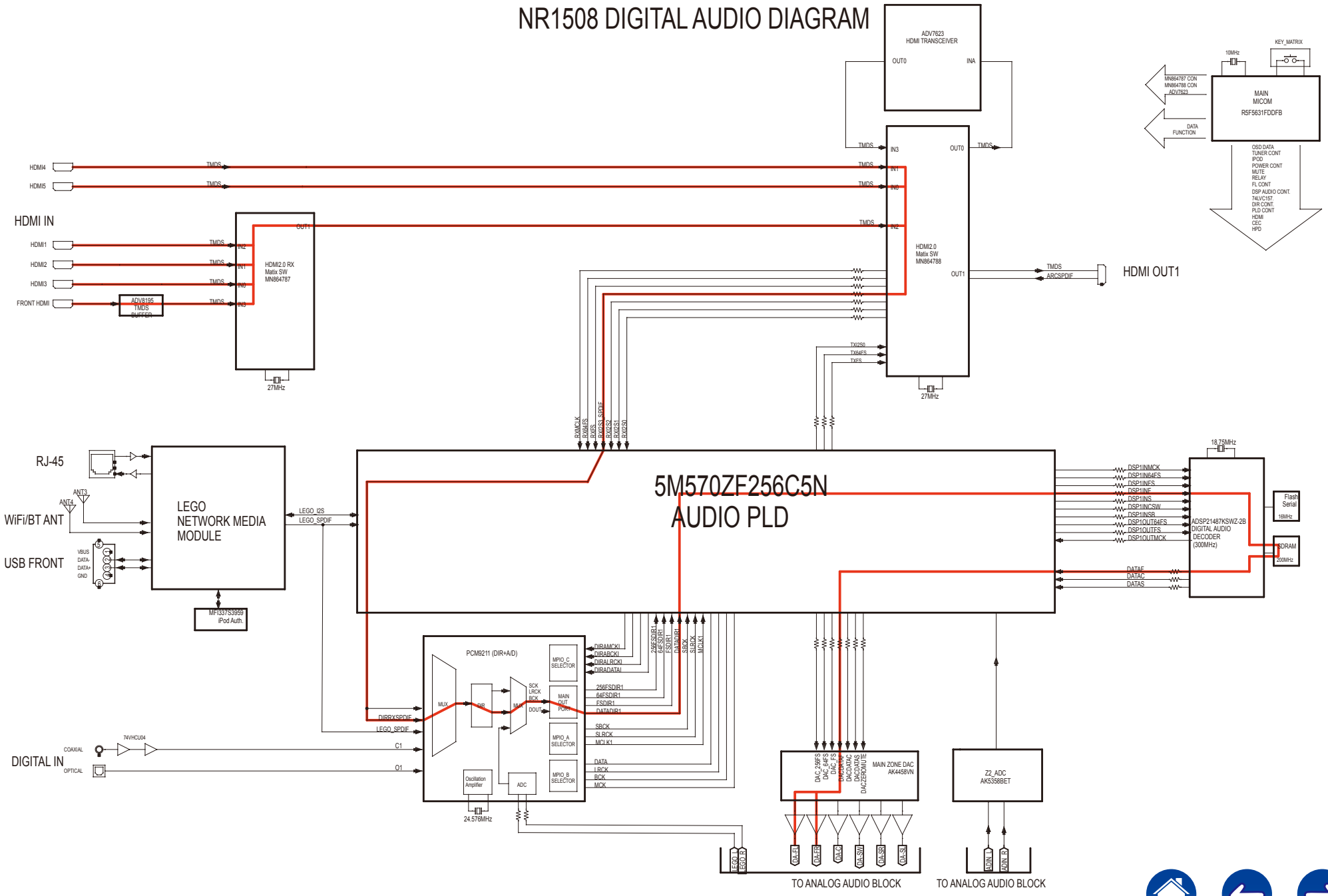
NR1508 DIGITAL AUDIO DIAGRAM
ADV7623
HDMI TRANSCEIVER
OUT0
INA
KEY_MATRIX
10MHz
MAIN
MICOM
R5F5631FDDFB
MN864787 CON
MN864788 CON
ADV7623
DATA
FUNCTION
OSD DATA
TUNER CONT
IPOD
POWER CONT
MUTE
RELAY
FL CONT
DSP AUDIO CONT.
74LVC157,
DIR CONT.
PLD CONT
HDMI
CEC
HPD
HDMI IN
HDMI1
HDMI2
HDMI3
FRONT HDMI
HDMI4
HDMI5
TMDS
ADV8195
TMDS
BUFFER
HDMI2.0 RX
Matix SW
MN864787
27MHz
HDMI2.0
Matix SW
MN864788
HDMI OUT1
ARCSPDIF
5M570ZF256C5N
AUDIO PLD
RJ-45
WiFi/BT ANT
USB FRONT
LEGO
NETWORK MEDIA
MODULE
LEGO_I2S
LEGO_SPDIF
MF1337S3959
iPod Auth.
18.75MHz
ADSP21487KSWZ-2B
DIGITAL AUDIO
DECODER
(300MHz)
Flash
Serial
16MHz
SDRAM
200MHz
DIGITAL IN
COAXIAL
OPTICAL
74VHCU04
PCM9211 (DIR+A/D)
MPIO_C
SELECTOR
MAIN
OUT
PORT
MPIO_A
SELECTOR
MPIO_B
SELECTOR
Oscillation
Amplifier
ADC
24.576MHz
DIRBRXSPDIF
LEGO_SPDIF
C1
O1
MAIN ZONE DAC
AK4458VN
Z2_ADC
AK5358BET
TO ANALOG AUDIO BLOCK
TO ANALOG AUDIO BLOCK

fig.03b

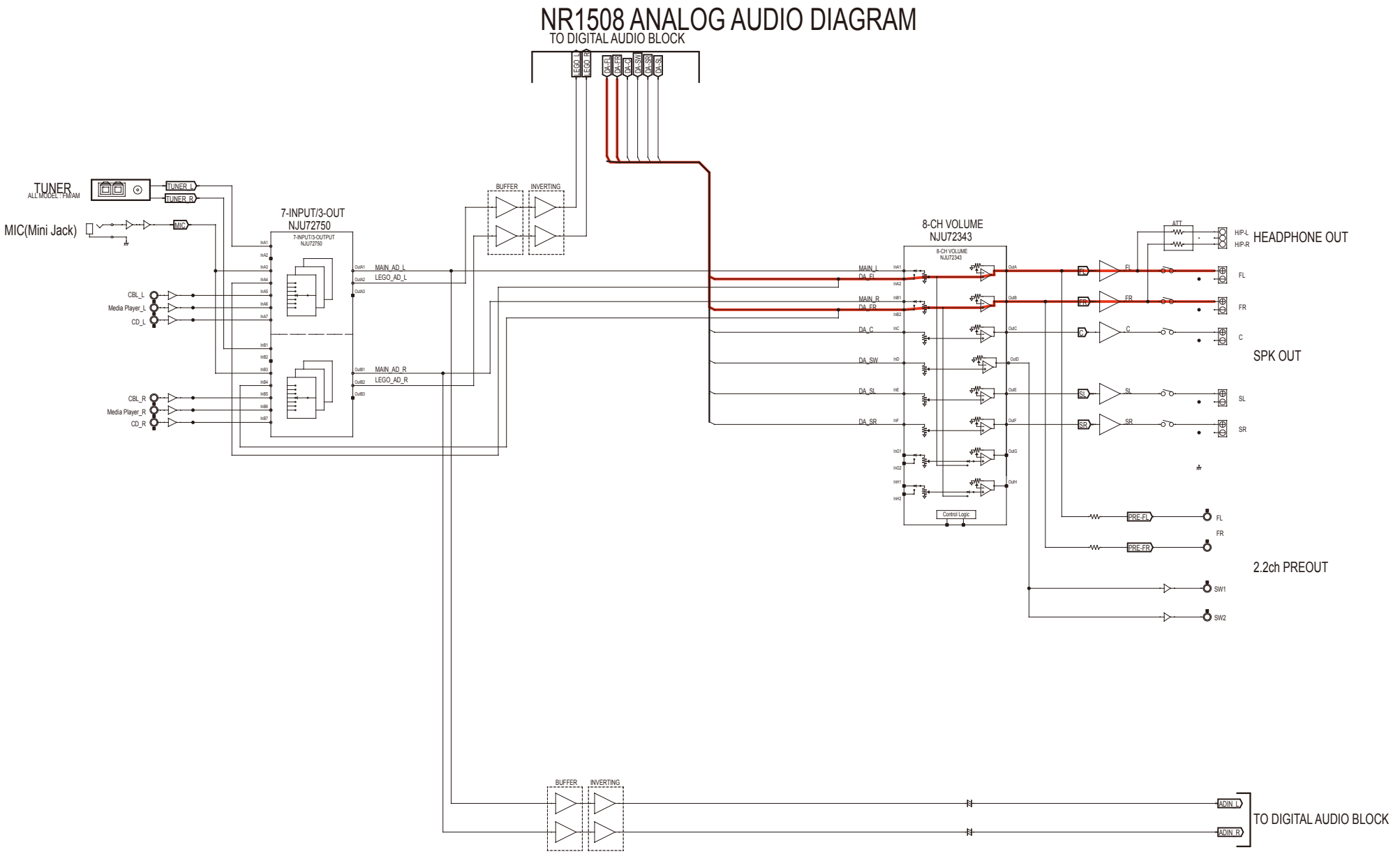
NR1508 ANALOG AUDIO DIAGRAM
TO DIGITAL AUDIO BLOCK
LEGO_L
LEGO_R
DA_FL
DA_FR
DA_C
DA_SW
DA_SR
DA_SL
TUNER
ALL MODEL : FM/AM
TUNER_L
TUNER_R
MIC(Mini Jack)
MIC
7-INPUT/3-OUT
NJU72750
7-INPUT/3-OUTPUT
NJU72750
CBL_L
Media Player_L
CD_L
CBL_R
Media Player_R
CD_R
MAIN_AD_L
LEGO_AD_L
MAIN_AD_R
LEGO_AD_R
BUFFER
INVERTING
8-CH VOLUME
NJU72343
8-CH VOLUME
NJU72343
MAIN_L
DA_FL
MAIN_R
DA_FR
DA_C
DA_SW
DA_SL
DA_SR
Control Logic
ATT
HP-L
HP-R
HEADPHONE OUT
FL
FR
C
SPK OUT
SL
SR
PRE-FL
PRE-FR
2.2ch PREOUT
SW1
SW2
BUFFER
INVERTING
ADIN_L
ADIN_R
TO DIGITAL AUDIO BLOCK

fig.04a

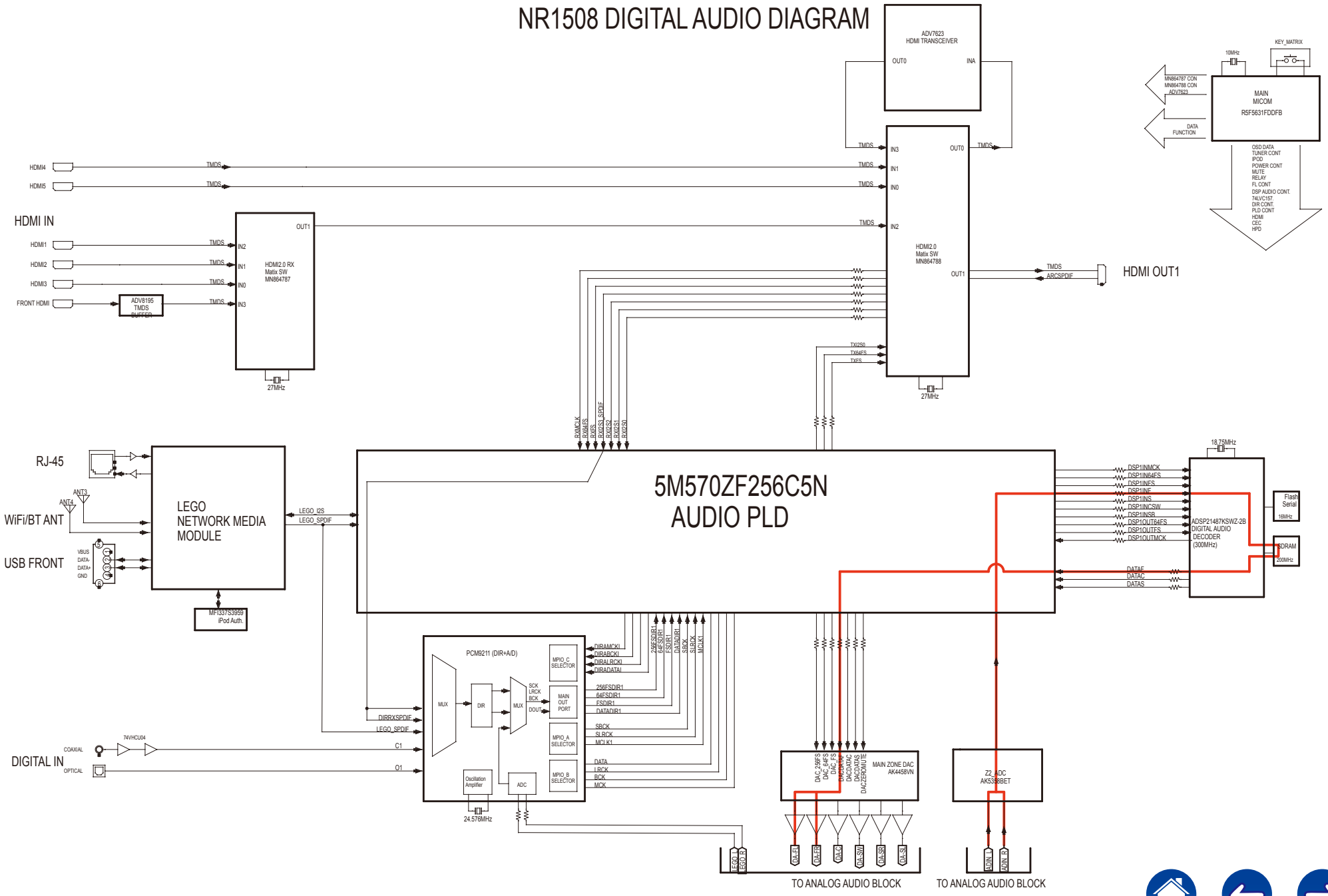
NR1508 DIGITAL AUDIO DIAGRAM
ADV7623
HDMI TRANSCEIVER
OUT0
INA
HDMI IN
HDMI1
HDMI2
HDMI3
FRONT HDMI
ADV8195
TMDS
BUFFER
HDMI2.0 RX
Matix SW
MN864787
HDMI4
HDMI5
HDMI2.0
Matix SW
MN864788
HDMI OUT1
ARCSPDIF
27MHz
KEY_MATRIX
10MHz
MAIN
MICOM
R5F5631FDDFB
MN864787 CON
MN864788 CON
ADV7623
DATA
FUNCTION
OSD DATA
TUNER CONT
IPOD
POWER CONT
MUTE
RELAY
FL CONT
DSP AUDIO CONT.
74LVC157,
DIR CONT.
PLD CONT
HDMI
CEC
HPD
5M570ZF256C5N
AUDIO PLD
RJ-45
WiFi/BT ANT
USB FRONT
LEGO
NETWORK MEDIA
MODULE
MF1337S3959
iPod Auth.
LEGO_I2S
LEGO_SPDIF
18.75MHz
ADSP21487KSWZ-2B
DIGITAL AUDIO
DECODER
(300MHz)
Flash
Serial
16MHz
SDRAM
200MHz
PCM9211 (DIR+A/D)
MUX
DIR
ADC
Oscillation
Amplifier
24.576MHz
MPIO_C
SELECTOR
MAIN
OUT
PORT
MPIO_A
SELECTOR
MPIO_B
SELECTOR
DIRRXSPDIF
LEGO_SPDIF
DIGITAL IN
COAXIAL
OPTICAL
74VHCU04
MAIN ZONE DAC
AK4458VN
Z2_ADC
AK5388BET
TO ANALOG AUDIO BLOCK
TO ANALOG AUDIO BLOCK

fig.04b

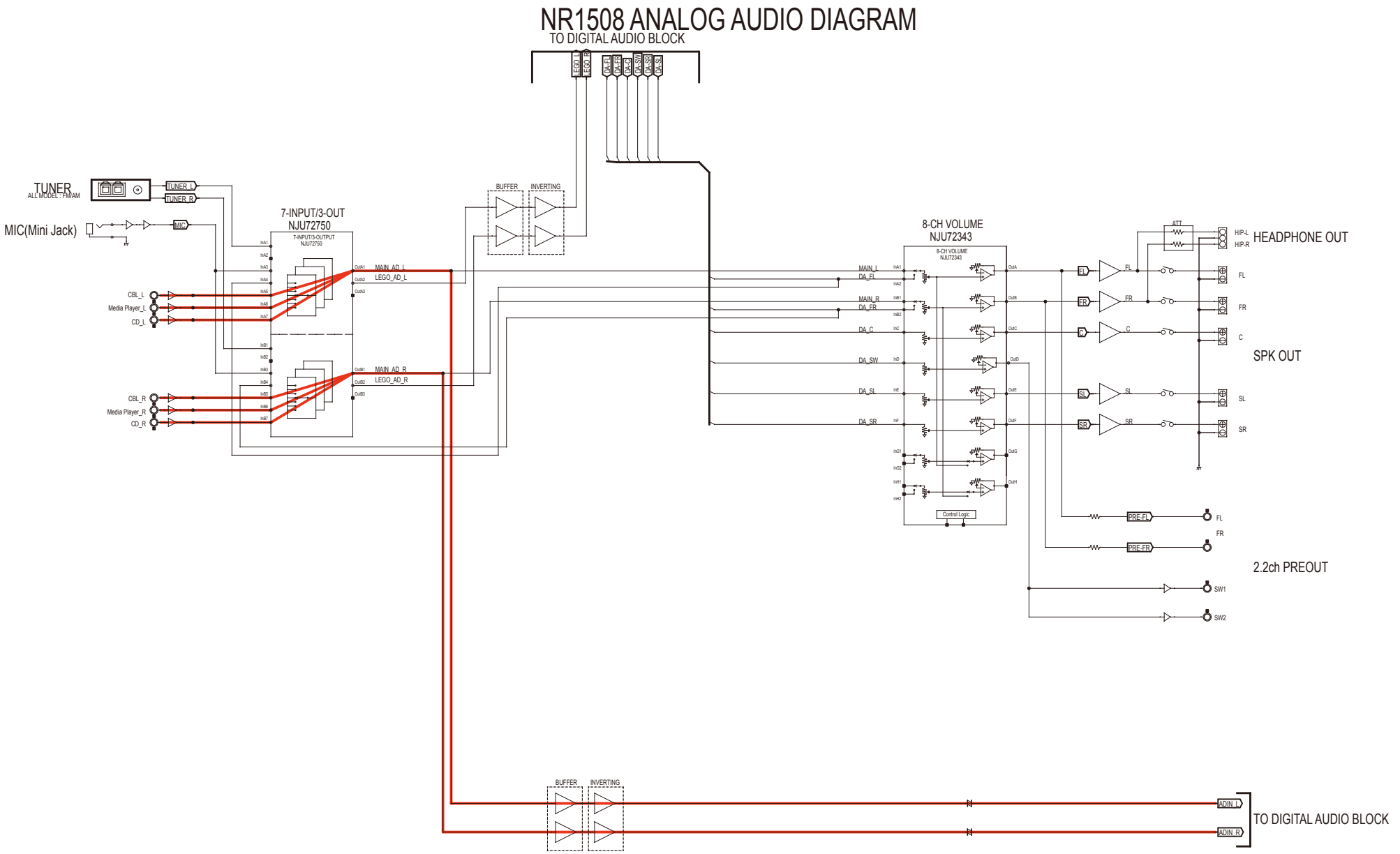
NR1508 ANALOG AUDIO DIAGRAM
TO DIGITAL AUDIO BLOCK
LEGO_L
LEGO_R
DA_FL
DA_FR
DA_C
DA_SW
DA_SR
DA_SL
TUNER
ALL MODEL : FM/AM
TUNER_L
TUNER_R
MIC(Mini Jack)
MIC
7-INPUT/3-OUT
NJU72750
7-INPUT/3-OUTPUT
NJU72750
CBL_L
Media Player_L
CD_L
CBL_R
Media Player_R
CD_R
MAIN_AD_L
LEGO_AD_L
MAIN_AD_R
LEGO_AD_R
BUFFER
INVERTING
8-CH VOLUME
NJU72343
8-CH VOLUME
NJU72343
MAIN_L
DA_FL
MAIN_R
DA_FR
DA_C
DA_SW
DA_SL
DA_SR
Control Logic
ATT
FL
FR
C
SL
SR
HP-L
HP-R
HEADPHONE OUT
SPK OUT
PRE-FL
PRE-FR
2.2ch PREOUT
SW1
SW2
BUFFER
INVERTING
ADIN_L
ADIN_R
TO DIGITAL AUDIO BLOCK

fig.05

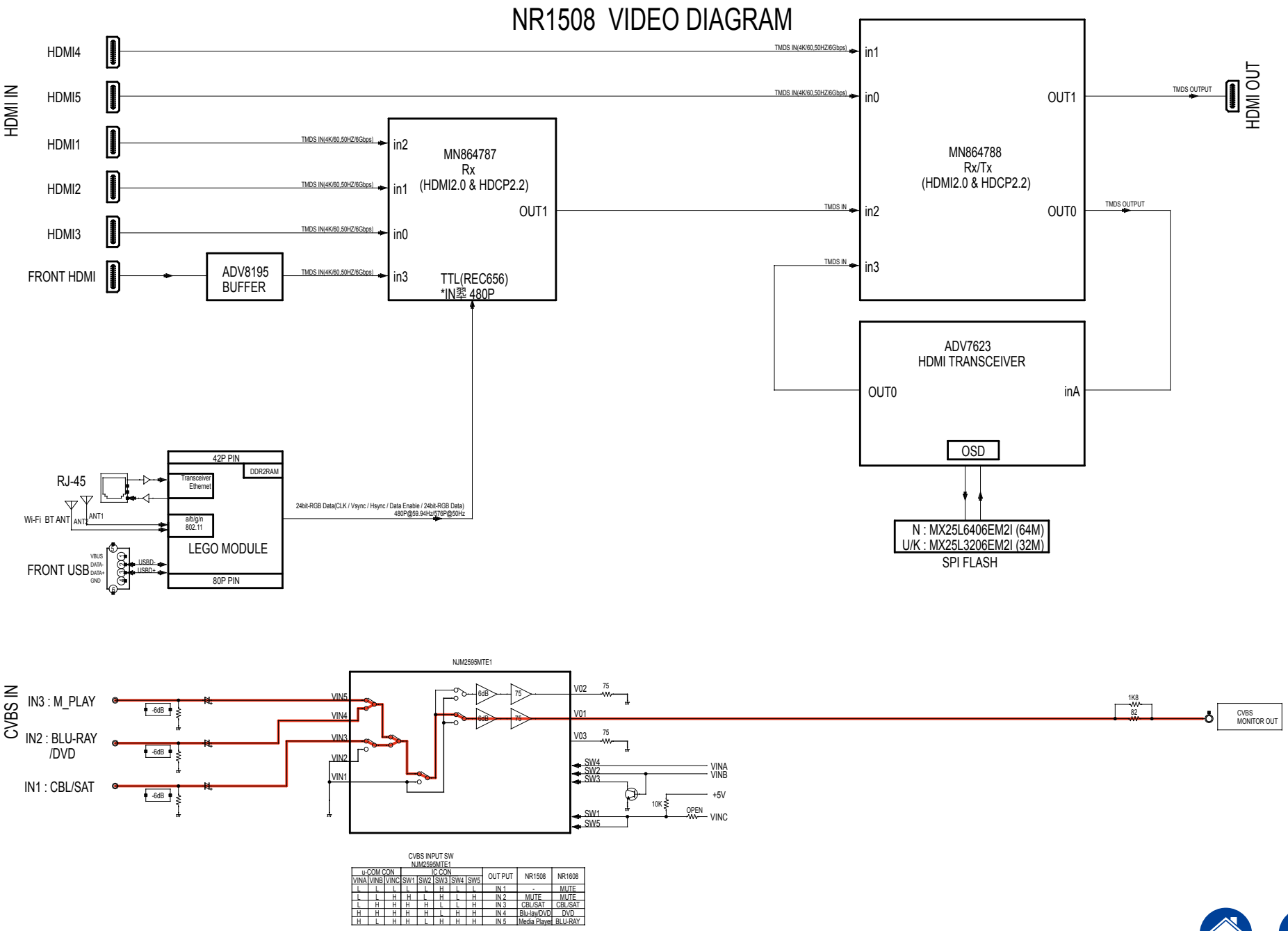

CVBS INPUT SW
NJM2595MTE1

u-COM CON			IC CON					OUT PUT	NR1508	NR1608
VINA	VINB	VINC	SW1	SW2	SW3	SW4	SW5			
L	L	L	L	L	H	L	L	IN 1	-	MUTE
L	L	H	H	L	H	L	H	IN 2	MUTE	MUTE
L	H	H	H	H	L	L	H	IN 3	CBL/SAT	CBL/SAT
H	H	H	H	H	L	H	H	IN 4	Blu-ray/DVD	DVD
H	L	H	H	L	H	H	H	IN 5	Media Player	BLU-RAY

fig.06

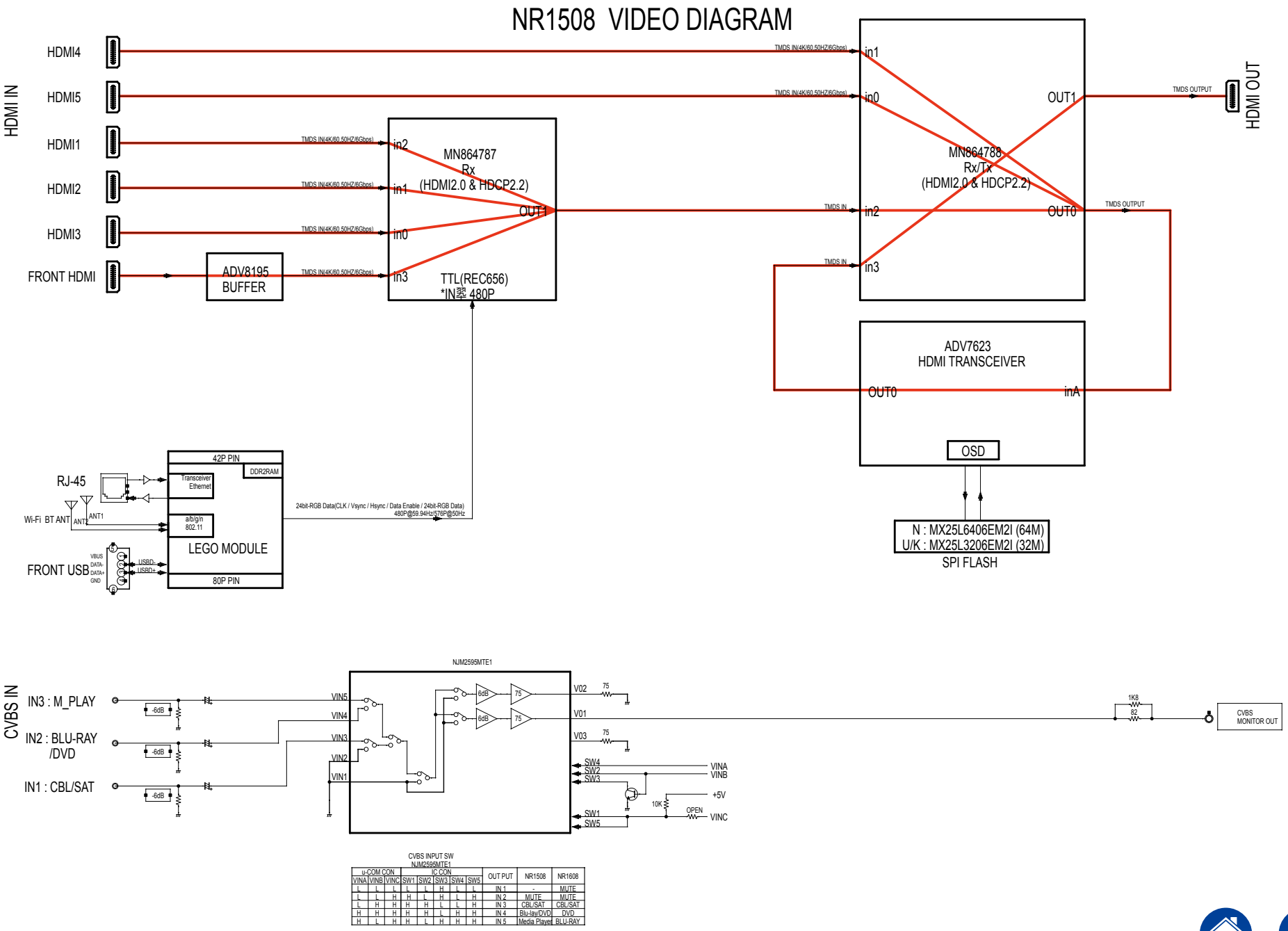

CVBS INPUT SW
NJM2595MTE1

u-COM CON			IC CON					OUT PUT	NR1508	NR1608
VINA	VINB	VINC	SW1	SW2	SW3	SW4	SW5			
L	L	L	L	L	H	L	L	IN 1	-	MUTE
L	L	H	H	L	H	L	H	IN 2	MUTE	MUTE
L	H	H	H	H	L	L	H	IN 3	CBL/SAT	CBL/SAT
H	H	H	H	H	L	H	H	IN 4	Blu-ray/DVD	DVD
H	L	H	H	L	H	H	H	IN 5	Media Player	BLU-RAY

fig.07

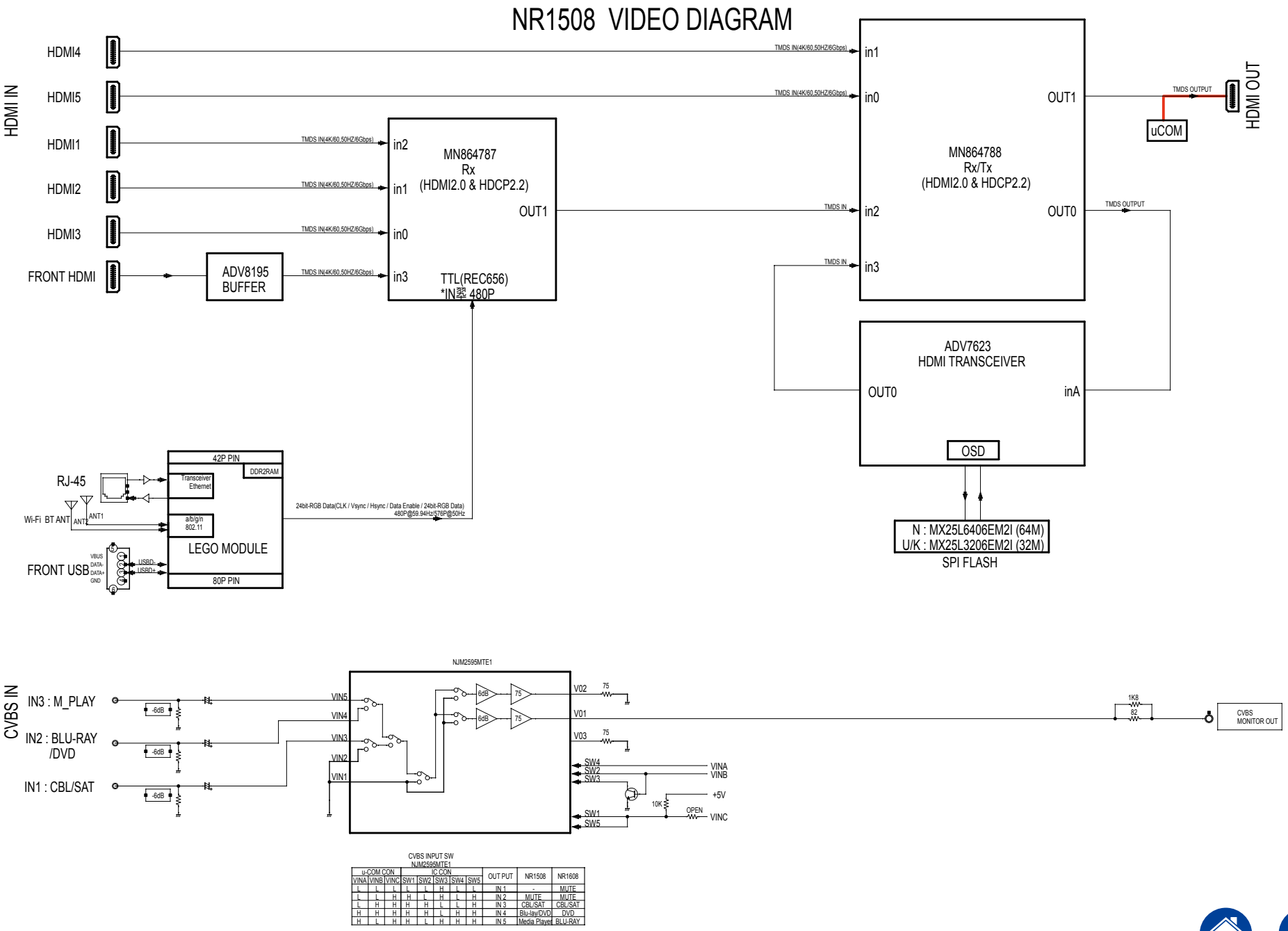

CVBS INPUT SW
NJM2595MTE1

u-COM CON			IC CON					OUT PUT	NR1508	NR1608
VINA	VINB	VINC	SW1	SW2	SW3	SW4	SW5			
L	L	L	L	L	H	L	L	IN 1	-	MUTE
L	L	H	H	L	H	L	H	IN 2	MUTE	MUTE
L	H	H	H	H	L	L	H	IN 3	CBL/SAT	CBL/SAT
H	H	H	H	H	L	H	H	IN 4	Blu-ray/DVD	DVD
H	L	H	H	L	H	H	H	IN 5	Media Player	BLU-RAY

fig.08a

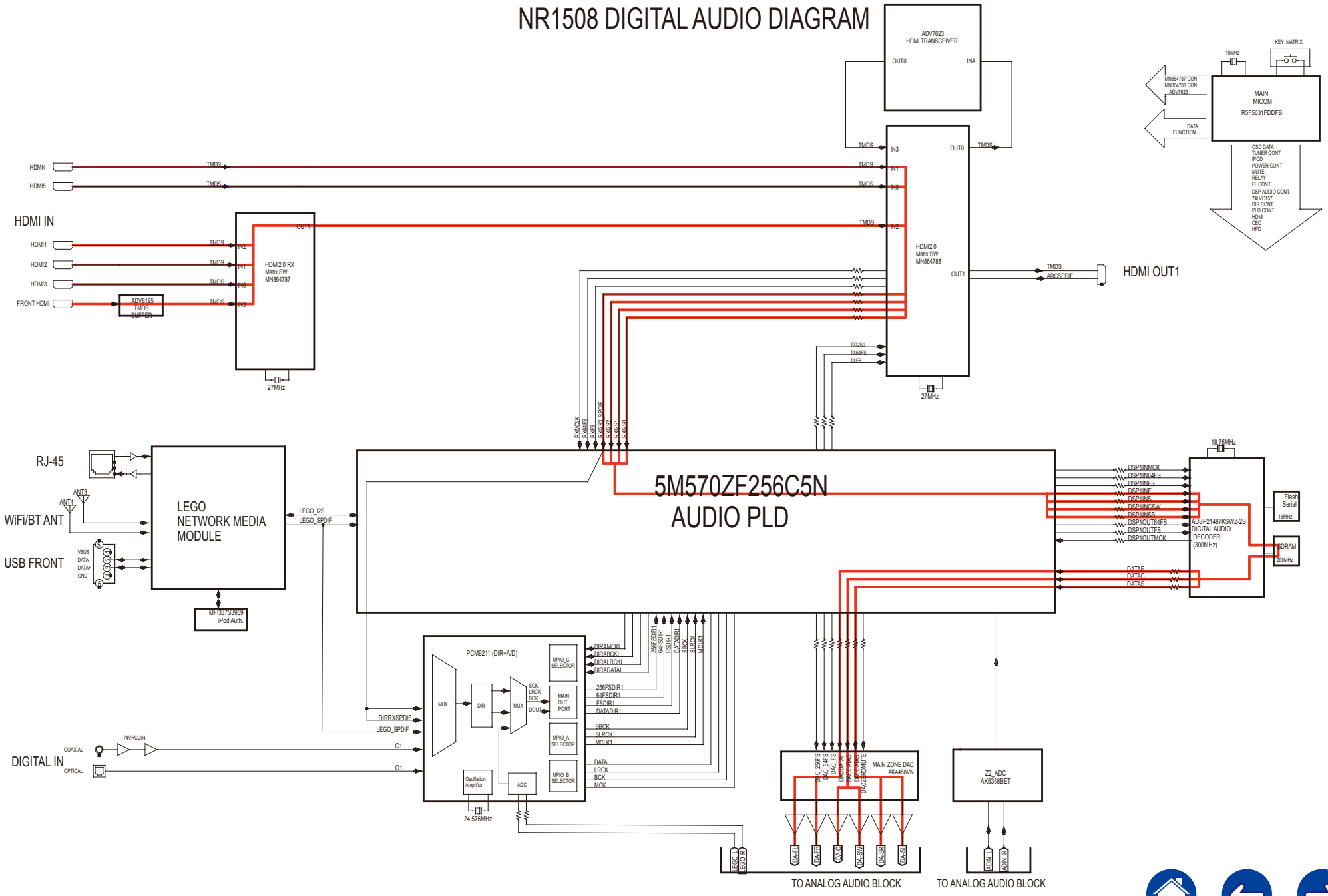
NR1508 DIGITAL AUDIO DIAGRAM
ADV7623
HDMI TRANSCEIVER
OUT0
INA
KEY_MATRIX
10MHz
MAIN
MICOM
R5F5631FDDFB
MN864787 CON
MN864788 CON
ADV7623
DATA
FUNCTION
OSD DATA
TUNER CONT
IPOD
POWER CONT
MUTE
RELAY
FL CONT
DSP AUDIO CONT.
74LVC157,
DIR CONT.
PLD CONT
HDMI
CEC
HPD
HDMI IN
HDMI1
HDMI2
HDMI3
FRONT HDMI
HDMI4
HDMI5
TMDS
ADV8195
TMDS
BUFFER
HDMI2.0 RX
Matix SW
MN864787
HDMI2.0
Matix SW
MN864788
27MHz
HDMI OUT1
ARCSPDIF
5M570ZF256C5N
AUDIO PLD
RJ-45
WiFi/BT ANT
USB FRONT
LEGO
NETWORK MEDIA
MODULE
MF1337S3959
iPod Auth.
LEGO_I2S
LEGO_SPDIF
18.75MHz
ADSP21487KSWZ-2B
DIGITAL AUDIO
DECODER
(300MHz)
Flash
Serial
16MHz
SDRAM
200MHz
DIGITAL IN
COAXIAL
OPTICAL
74VHCU04
PCM9211 (DIR+A/D)
MUX
DIR
MPIO_C
SELECTOR
MAIN
OUT
PORT
MPIO_A
SELECTOR
MPIO_B
SELECTOR
Oscillation
Amplifier
ADC
24.576MHz
DIRRXSPDIF
LEGO_SPDIF
MAIN ZONE DAC
AK4458VN
Z2_ADC
AK5358BET
TO ANALOG AUDIO BLOCK
TO ANALOG AUDIO BLOCK

fig.08b

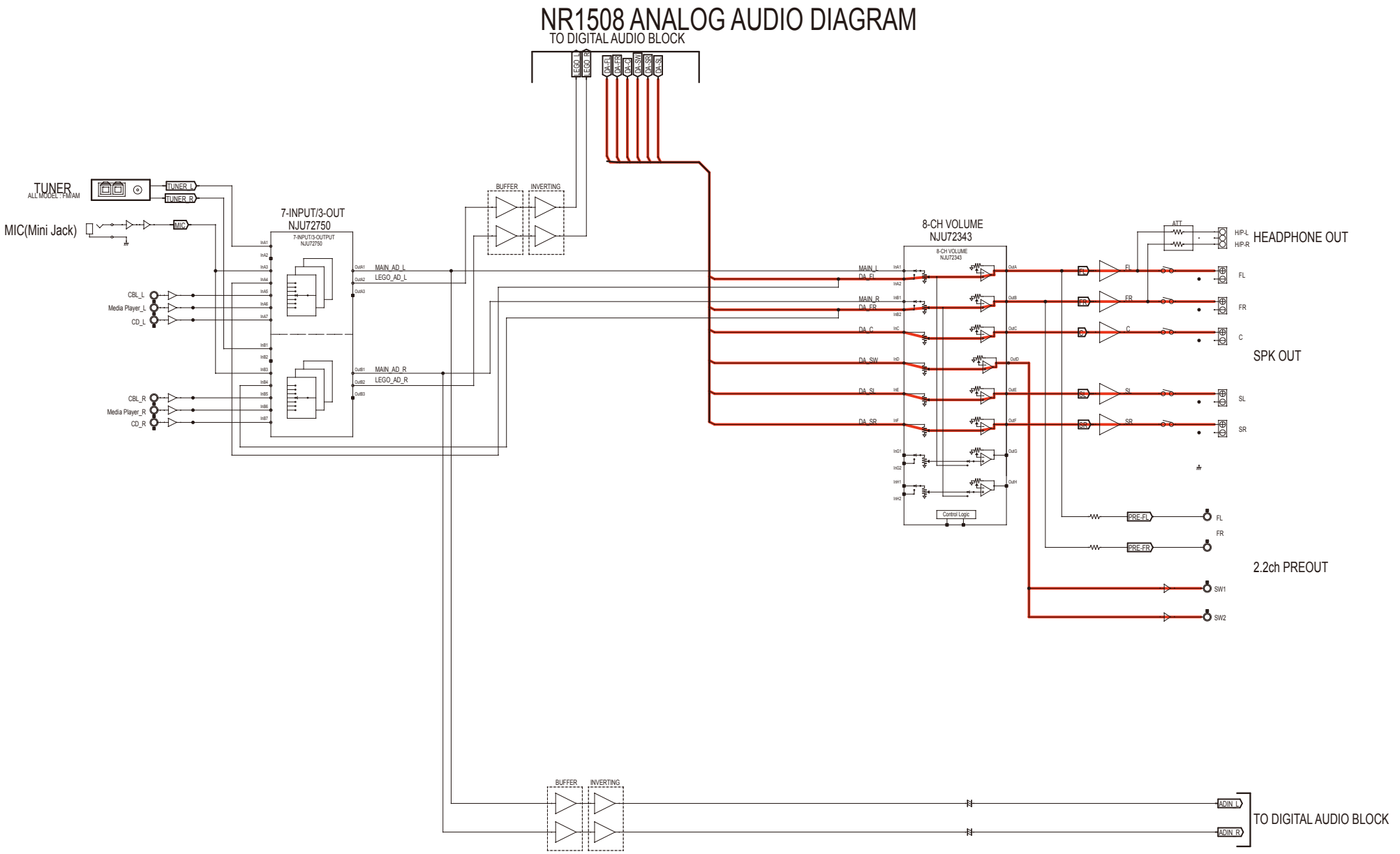
NR1508 ANALOG AUDIO DIAGRAM
TO DIGITAL AUDIO BLOCK
LEGO_L
LEGO_R
DA_FL
DA_FR
DA_C
DA_SW
DA_SR
DA_SL
TUNER
ALL MODEL : FM/AM
TUNER_L
TUNER_R
MIC(Mini Jack)
MIC
7-INPUT/3-OUT
NJU72750
7-INPUT/3-OUTPUT
NJU72750
CBL_L
Media Player_L
CD_L
CBL_R
Media Player_R
CD_R
MAIN_AD_L
LEGO_AD_L
MAIN_AD_R
LEGO_AD_R
BUFFER
INVERTING
8-CH VOLUME
NJU72343
8-CH VOLUME
NJU72343
MAIN_L
DA_FL
MAIN_R
DA_FR
DA_C
DA_SW
DA_SL
DA_SR
Control Logic
ATT
HP-L
HP-R
HEADPHONE OUT
FL
FR
C
SPK OUT
SL
SR
PRE-FL
PRE-FR
2.2ch PREOUT
SW1
SW2
BUFFER
INVERTING
ADIN_L
ADIN_R
TO DIGITAL AUDIO BLOCK

fig.09

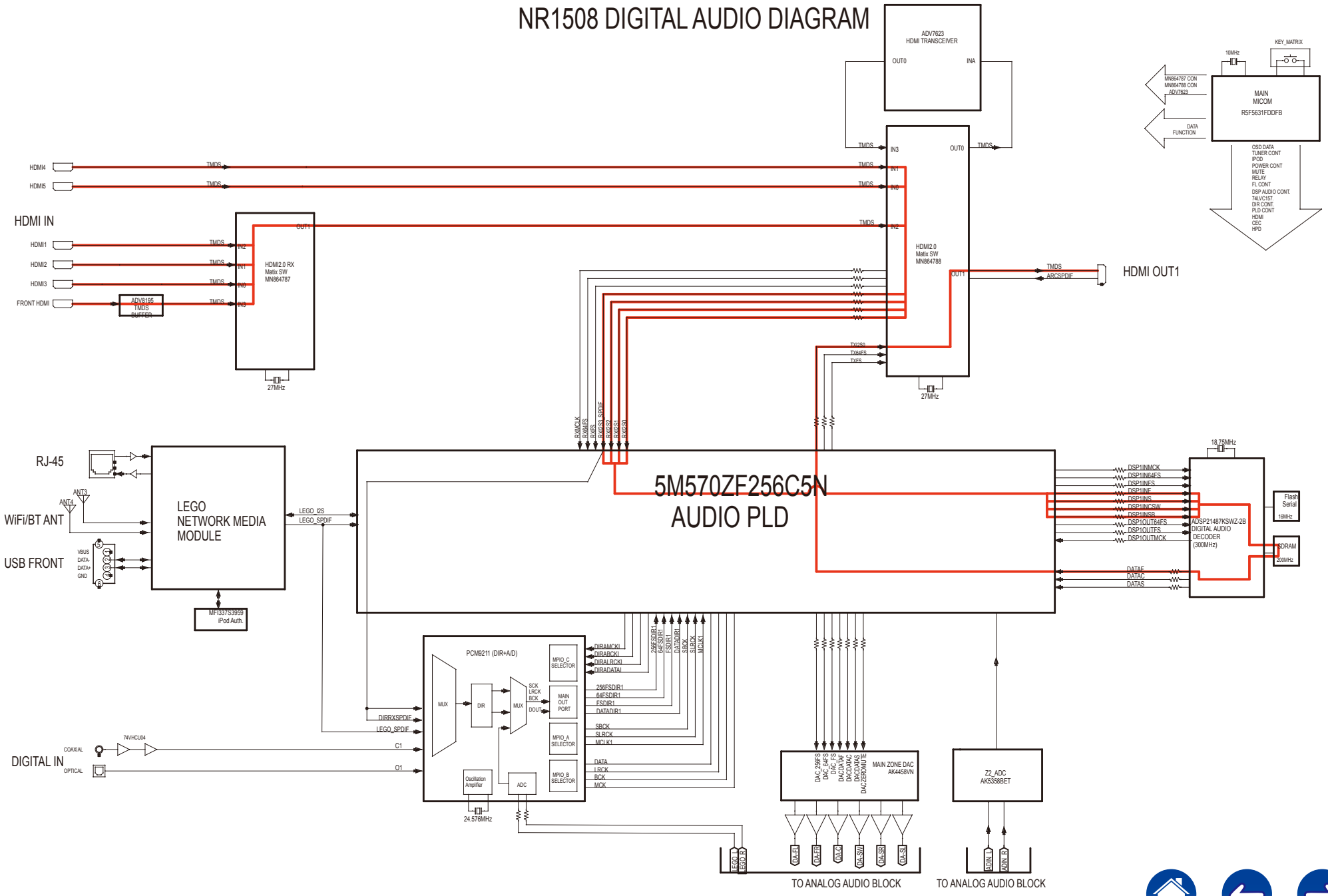
NR1508 DIGITAL AUDIO DIAGRAM
ADV7623
HDMI TRANSCEIVER
OUT0
INA
KEY_MATRIX
10MHz
MAIN
MICOM
R5F5631FDDFB
MN864787 CON
MN864788 CON
ADV7623
DATA
FUNCTION
OSD DATA
TUNER CONT
IPOD
POWER CONT
MUTE
RELAY
FL CONT
DSP AUDIO CONT.
74LVC157,
DIR CONT.
PLD CONT
HDMI
CEC
HPD
HDMI IN
HDMI1
HDMI2
HDMI3
FRONT HDMI
HDMI4
HDMI5
TMDS
ADV8195
TMDS
BUFFER
HDMI2.0 RX
Matrix SW
MN864787
HDMI2.0
Matrix SW
MN864788
27MHz
HDMI OUT1
ARCSPDIF
5M570ZF256C5N
AUDIO PLD
RJ-45
WiFi/BT ANT
USB FRONT
LEGO
NETWORK MEDIA
MODULE
MP1337S3959
iPod Auth.
LEGO_I2S
LEGO_SPDIF
18.75MHz
ADSP21487KSWZ-2B
DIGITAL AUDIO
DECODER
(300MHz)
Flash
Serial
16MHz
SDRAM
200MHz
DIGITAL IN
COAXIAL
OPTICAL
74VHCU04
PCM9211 (DIR+A/D)
MUX
DIR
ADC
Oscillation
Amplifier
24.576MHz
MPIO_C
SELECTOR
MAIN
OUT
PORT
MPIO_A
SELECTOR
MPIO_B
SELECTOR
DIRRXSPDIF
LEGO_SPDIF
MAIN ZONE DAC
AK4458VN
Z2_ADC
AK5358BET
TO ANALOG AUDIO BLOCK
TO ANALOG AUDIO BLOCK

fig.10

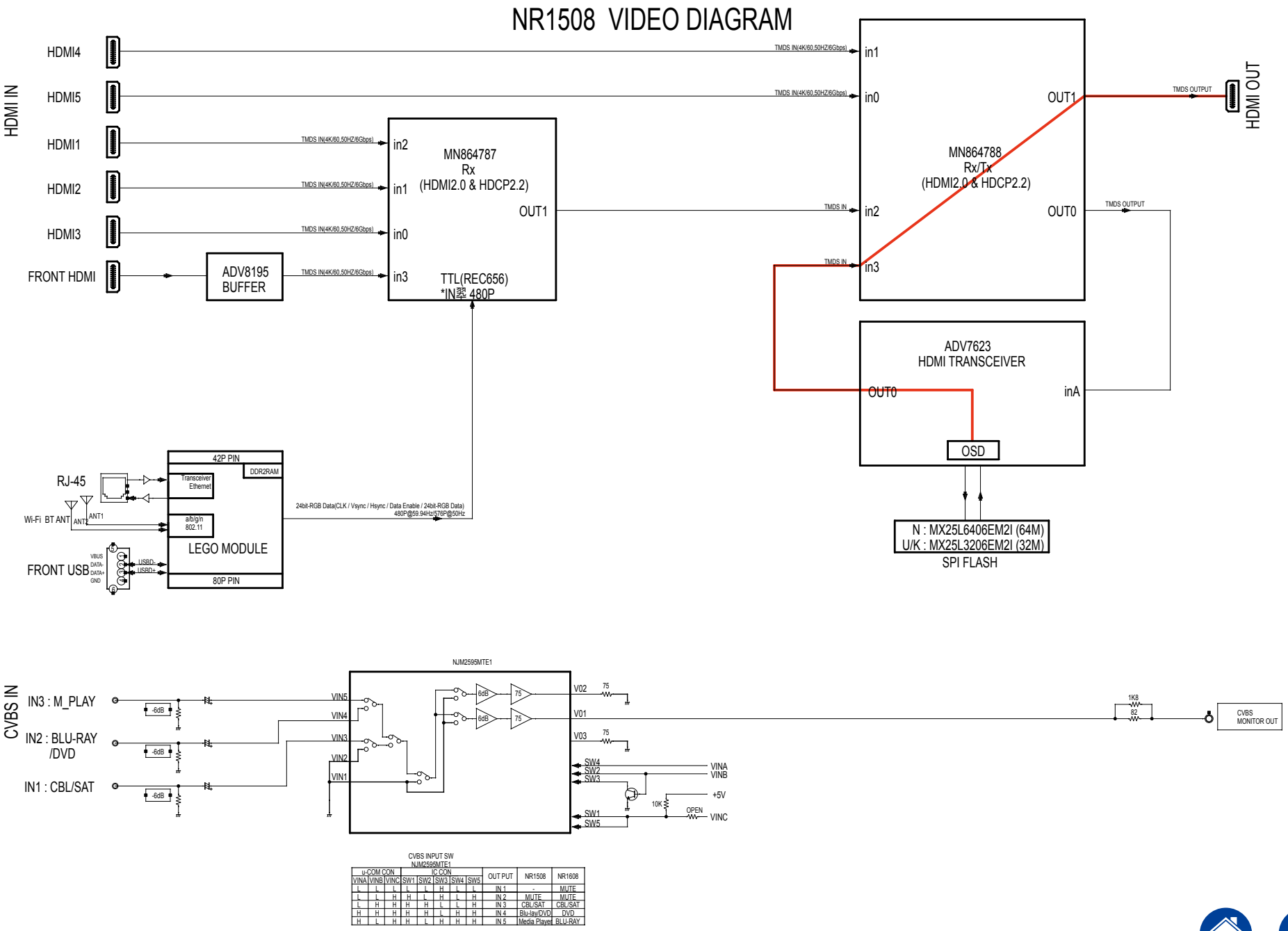

CVBS INPUT SW
NJM2595MTE1

u-COM CON			IC CON					OUT PUT	NR1508	NR1608
VINA	VINB	VINC	SW1	SW2	SW3	SW4	SW5			
L	L	L	L	L	H	L	L	IN 1	-	MUTE
L	L	H	H	L	H	L	H	IN 2	MUTE	MUTE
L	H	H	H	H	L	L	H	IN 3	CBL/SAT	CBL/SAT
H	H	H	H	H	L	H	H	IN 4	Blu-ray/DVD	DVD
H	L	H	H	L	H	H	H	IN 5	Media Player	BLU-RAY

JIG FOR SERVICING

Use the following jigs (extension cable kit) when repairing the PCBs.
Order with your dealer for the jigs your dealer if necessary.

CAUTION : Incorrect connections may cause malfunction.

Connection of Jig for DIGITAL PCB
---Items to Be Prepared---

8U-1100845 : EXTENSION UNIT KIT	:	1Set
Insulation sheet (Not supplied)	:	1 sheet
Ground lead (Not supplied)	:	2 pc

-Proceeding-

(1) Remove the screws.

(2) Remove the connector PCB.

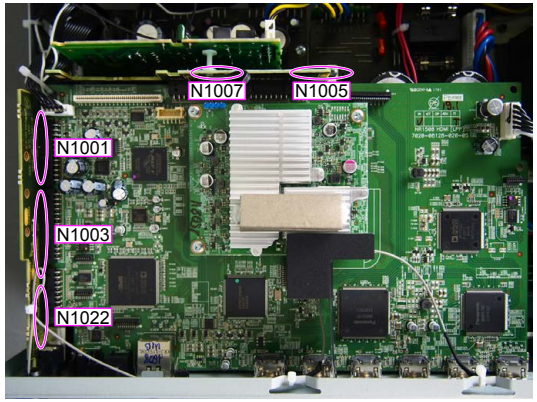

(3) Remove the DIGITAL PCB from the chassis and turn it over.
Place an insulation sheet larger than the PCB underneath the DIGITAL PCB.
※ Connect the earth of the PCB to the chassis using an earth wire, etc.

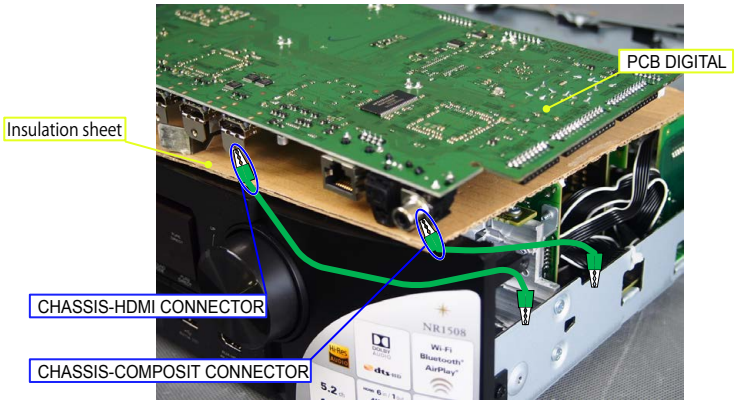

(4) Connect the expansion cables.

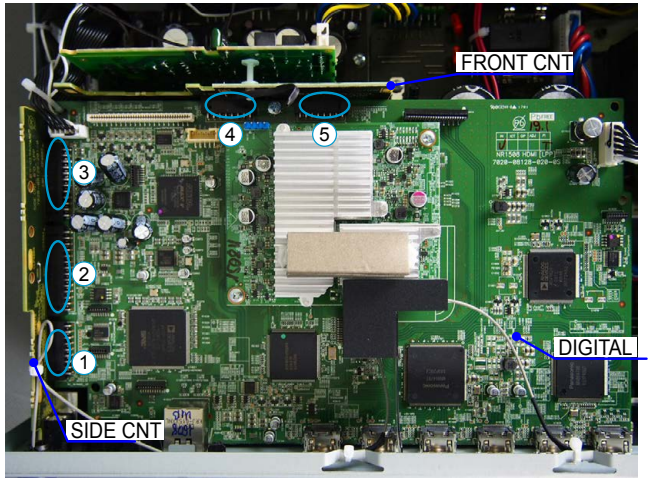

Board-to-Board Connections

No.	Pin	Ref. No.	PCB		Ref. No.	PCB
①	17pin	CP4608	SIDE CNT	⟷	N1022	DIGITAL
②	27pin	CP4604	SIDE CNT	⟷	N1003	DIGITAL
③	23pin	CP4603	SIDE CNT	⟷	N1001	DIGITAL
④	15pin	CP4616	FRONT CNT	⟷	N1007	DIGITAL
⑤	15pin	CP4617	FRONT CNT	⟷	N1005	DIGITAL

Adjusting Idling Current

1. Preparation

(1) Prepare a DC voltmeter.
(2) Place the unit under normal usage conditions, away from highly ventilated areas such as next to an air conditioning machine or electric fan.
The set requires an ambient temperature of 15℃ to 30℃ and standard humidity.
(3) Settings of This Unit
• POWER (Power source switch) STANDBY
• SPEAKER (Speaker terminal) No load
(Do not connect equipment such as speakers or dummy resistors.)

2. Adjustment Procedure

(1) Remove the top cover and turn **VR4800** (ALL Channel) of the AMP PCB counterclockwise(↺) as far as possible.
(2) Connect the DC Voltmeter to the test points.

FRONT-Lch	: TP4800	: VR4800
FRONT-Rch	: TP4802	: VR4801
CENTER ch	: TP4804	: VR4802
SURROUND-Lch	: TP4806	: VR4803
SURROUND-Rch	: TP4808	: VR4804

(3) Connect the power cord to an outlet. Next, press the power button to turn on the power.
(4) Set this unit as follows.
MASTER VOLUME : "---" (↺ min.) : turn counterclockwise to the lowest position.
SPEAKER (Speaker terminal) : No load
(Do not connect equipment such as speakers or dummy resistors.)
MODE : MCH STEREO
FUNCTION : DVD
(5) Turn **VR4800** clockwise (↻) and adjust the voltage of the test point to "**2.0mV ± 0.5mV DC**" within 2 minutes.
(6) Check whether the voltage is within the range "**2.0mV +2mV/-1mV DC**" 10 minutes after adjustment.
(7) Adjust the variable resistance of each channel using the same method.

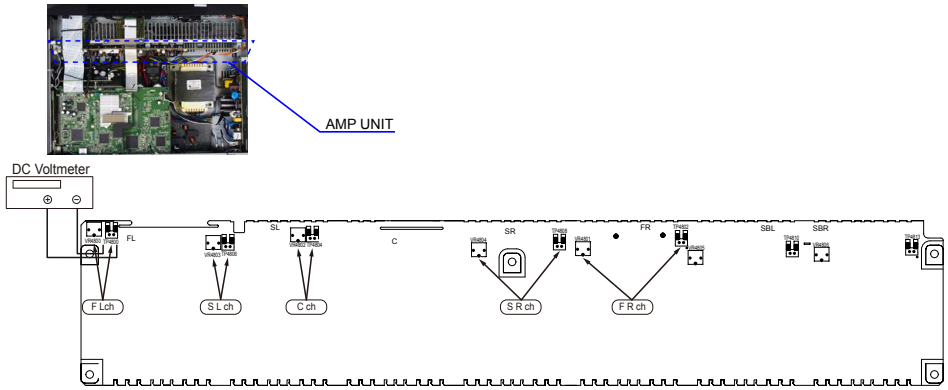

UPDATING

PROCEDURE AFTER REPLACING THE PCB.

PROCEDURE AFTER REPLACING THE U-COM, ETC.

FIRMWARE UPDATE PROCEDURE

1. Items necessary for update
2. Updating via USB
3. Update method when the DIGITAL PCB or network module is replaced (Using a USB flash drive)
4. Update Method for Service Region Settings
5. Normal Firmware Update Method from USB Flash Drive
6. Normal Firmware Update Method from OTA
7. About the error codes

PROCEDURE AFTER REPLACING THE PCB.

The procedure after replacing the printed circuit boards is as follows.
(1) Change the resistor for setting the region.

Model Area	DIGITAL PCB	
	R1206	R1202
North America (U)	OPEN	0
Europe (N)	0	OPEN
China (K)	10k	10k

See the PCB below.

(2) Be sure to replace the software with the latest version.

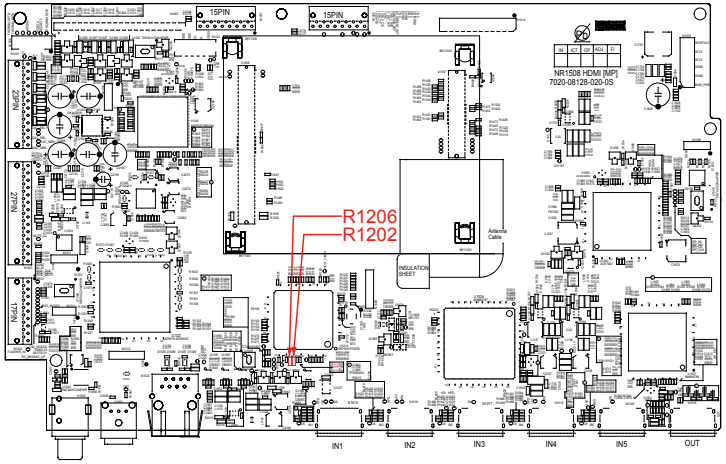

PROCEDURE AFTER REPLACING THE U-COM, ETC.

The procedure after replacing the u-COM (microprocessor), flash ROM, etc. is as follows.

PCB Name	Ref. No.	Description	Procedure after Replacement	Remark
DIGITAL	U1013	R5F5631FDDFB	B	SOFTWARE : Main
DIGITAL	U1023	MX25L1606EM2I-12G	B	SOFTWARE : DSP ROM
DIGITAL	U1029	MX25L3206EM2I 32 M MX25L6406EM2I 64M（N only）	B	SOFTWARE : GUI ROM
DIGITAL	U1041	5M570ZF256C5N	B	SOFTWARE : AUDIO PLD
MODULE	P17	NETWORK MODULE	D, E	SOFTWARE : Network

Procedure after Replacement

A : The software has been written. The software is not written at the time of replacement.

B : The software has been written. The software may need to be rewritten by version updates. Check the version.

C : The software has not been written. The software needs to be written after replacement.
See "FIRMWARE UPDATE PROCEDURE" for information on writing the software.

D : ""The software has been written. Be sure to rewrite with the latest software for your service region.
See "FIRMWARE UPDATE PROCEDURE" for information on writing the software.

E : An Electromagnetic wave absorption sheet [HS05-R050] needs to be attached to the back of NETWORK MODULE.
If the Electromagnetic wave absorption sheet [HS05-R050] has been removed, replace with a new sheet.
Service product numbers are set, for details see the parts list [REF No.45].
Gasket needs to be attached to the A side of the NETWORK MODULE.
Fix the GASKET in place using adhesive.
(Use ADFEL GB-508W or equivalent adhesive.)
If the GASKET has been removed, replace with a brand new gasket.
Service product numbers are set, for details see the parts list [REF No.47].

Refer to the figure below for details of the attachment position.

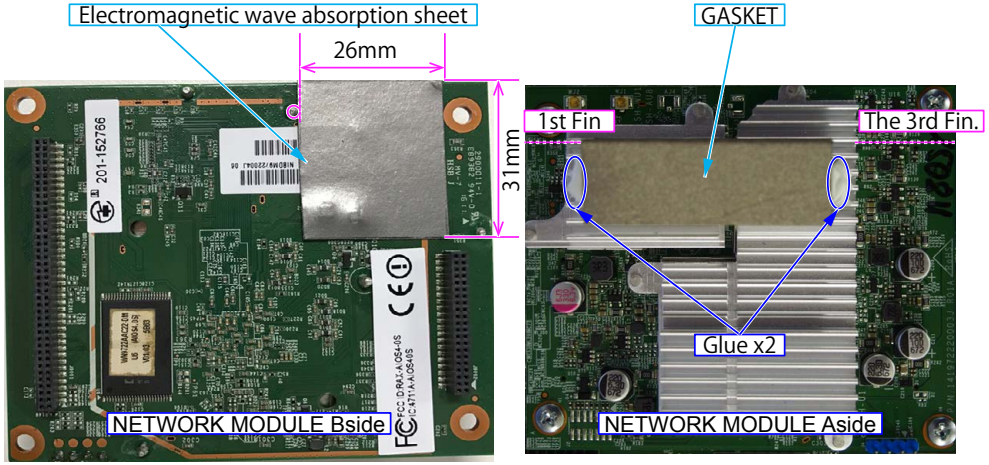

FIRMWARE UPDATE PROCEDURE

1. Items necessary for update

Items necessary for update are as follows.

Update Type	Needed Part for Update	Requirement	Offered / not Offered		
			Standard Service Equipment Not offered by D&M	Purchase from D&M Article code	Download from SDI
Via USB	USB flash drive (USB 2.0 : Min 1GB) • We recommend a USB memory device that has an LED installed.	Formatting FAT16 or FAT 32	X	-	"Table 1" or "Table 2"
Via OTA	Internet Connection by Broadband Circuit	-	X	-	-
	Modem	-	X	-	-
	Router	-	X	-	-
	Ethernet cable (CAT-5 or greater is recommended)	-	X	-	-

Table 1

Update download file when the DIGITAL PCB or network module is replaced

Model Name	Model Area	Download from SDI
NR1508	ALL	avr_40.prod.update.factory.xxxx.zip

Table 2

Update download file when the firmware is updated (Two files, "HW component" and "LEGO component")

Model Name	Model Area	Download from SDI		
		For HW component		For LEGO component
NR1508 U	North America (U)	Product ID : 100100550100	DPMS_NR1508U_LEGO_xxxx.zip	heos_40.prod_x.xxx.xx.zip
NR1508 N	Europe (N)	Product ID : 100100550200	DPMS_NR1508N_LEGO_xxxx.zip	
NR1508 K	China (K)	Product ID : 100100550500	DPMS_NR1508K_LEGO_xxxx.zip	

2. Updating via USB

The latest firmware can be downloaded to a USB memory for updates.

2.1. Connecting to the USB Memory

(1) Preparation

- Use a memory that supports USB2.0.
- USB format : Prepare a USB memory formatted in FAT16 or FAT32.
- Do not run the USB memory through a hub.
- Do not connect a computer to the USB port of this unit using a USB cable.
- Do not use an extension cable when connecting the USB unit.
- If a USB memory device cannot be updated, replace it with a different USB memory device and perform the update again.

2.2. Unzipping the Downloaded File

Unzip the downloaded file on your computer.

NRXXXXXXX	USB_NRXXXXXXX_XXXXXXXXXXXX-XXXX.zip

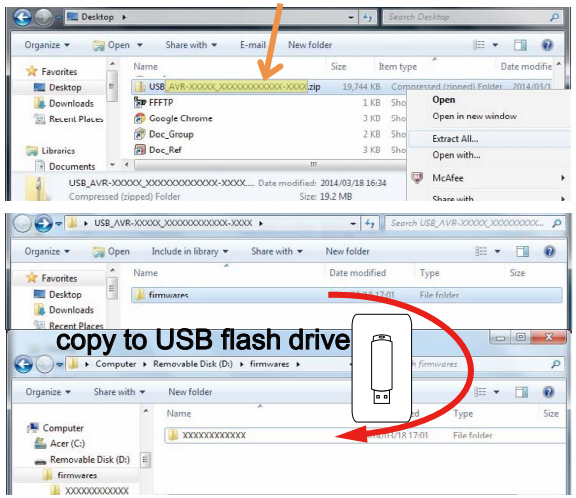

The "**firmwares**" folder is created upon unzipping the file.
Copy that folder to USB flash drive.
The "**firmwares**" folder must be in the root directly of the USB flash drive (memory).

3. Update method when the DIGITAL PCB or network module is replaced (Using a USB flash drive)

3.1. File structure on USB flash drive

DIGITAL PCB or network module is replaced onto the USB flash drive in the following structure.

After unzipping the files, store them in the root of the same USB flash drive.

Model Area	Download from SDI
ALL	avr_40.prod.update.factory.xxxx.zip

USB flash drive root
+ avr_40.prod.update.factory
  + xxxxxxzz.ota-download
  + heos_40.prod.update.factory

xxxxxx : Model name
zz : Region

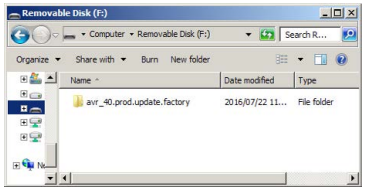

3.2. Start the update.

NOTE :
- Remove the LAN cable from this unit when updating.
  (Do not connect to a wired or wireless network.)
- The GUI menu setting details and image quality adjustment setting details are initialized when Firmware Factory Restore is performed. Therefore, take a note of the setting details beforehand and reconfigure the settings after update.

(1) Press the power button to turn on the power.
(2) Wait for this unit to start up.
(3) Set the input source to HEOS Music.
Check that the display is as shown below.

▶TuneIn Internet Radio	or	No Network Connection

Content of the display is scrolled.

(4) Insert the USB flash drive into the USB port.

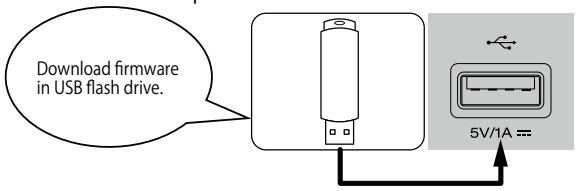

(5) USB Update starts automatically.
The Standby LED lights red.
Display during USB update

Please wait▶▶▶▶▶
↓
Update▶▶▶**% **m
↓
Update Completed

It takes a maximum of approximately 25 minutes for update to complete.

(6) The unit restarts when update is complete.
※When update is complete, the folder name on the USB flash drive changes to "**avr_40.prod.update.factory.done**". To use the files again, delete the "**.done**" part.

(7) Execute Firmware Factory Restore.
While holding down buttons "**STATUS**" and "**PURE DIRECT**" simultaneously, press the power button to turn on the power.

Display during Firmware Factory Restore

Restoring FW...
↓
Restore▶▶**% **m
↓
Completed

It takes approximately 15 minutes for Firmware Factory Restore to complete.

(8) Execute Service Region Settings.
See "4. Update Method for Service Region Settings"

(9) Check that the version is the specified version. See "1. Version Display Mode"

(10) If necessary, use OTA or the USB flash drive to update the firmware to the newest version.
※We recommend using the firmware update method using OTA.
See "5. Normal Firmware Update Method from USB Flash Drive" or "6. Normal Firmware Update Method from OTA"

---Cautions on Firmware Update---

- Do not remove the USB flash drive until updating is completed.
- Do not turn off the power until updating is completed.

It takes a maximum of approximately 25 minutes for update to complete.
Once an update is started, normal operations cannot be performed until it is completed.

4. Update Method for Service Region Settings

Copy the Service Region Settings from the USB flash drive to this unit.

4.1. Creating a Service Region Settings file

(1) Click [Start button] - [Accessories] - [notepad] on the PC to launch the notepad.

(2) Enter "**TEXT**".

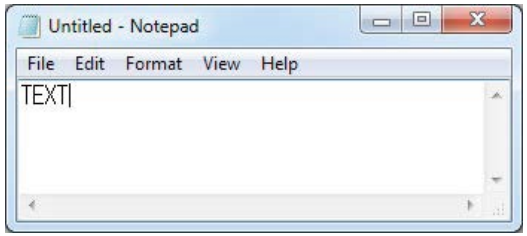

(3) Click "**File**", and then click "**Save As...**".

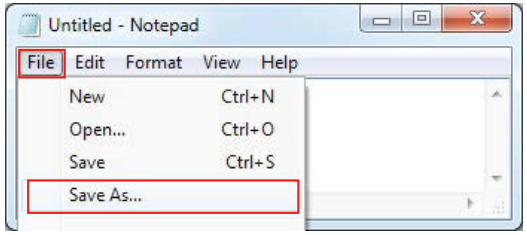

(4) Enter the file name and click the Save button.
NOTE : Enter the file name in double quotation marks. (The file extension is not required.)

Service Region	File name
North America	"denon-config-locale-set-1"
Europe	"denon-config-locale-set-2"
Japan	"denon-config-locale-set-3"
Australia	"denon-config-locale-set-4"
Korea	"denon-config-locale-set-5"
China	"denon-config-locale-set-6"
△2 Israel	"denon-config-locale-set-7"

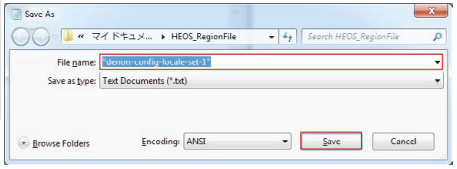

(5) Copy the files created on the USB flash drive.

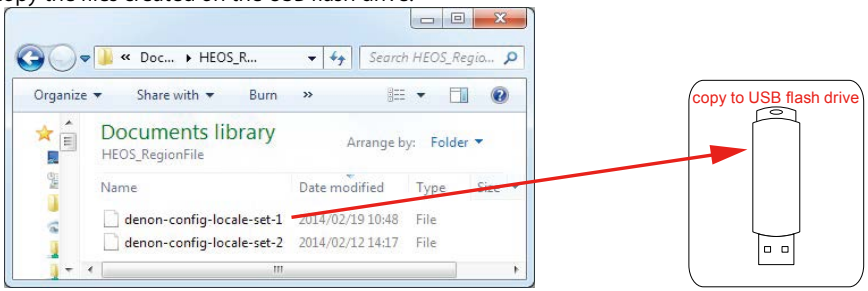

4.2. Starting Service Region Settings

NOTE :
- Remove the LAN cable from this unit when updating.
  (Do not connect to a wired or wireless network.)
- We recommend a USB memory device that has an LED installed.

(1) Press the power button to turn on the power.
(2) Wait for this unit to start up.
(3) Set the input source to HEOS Music.
Check that the display is as shown below.

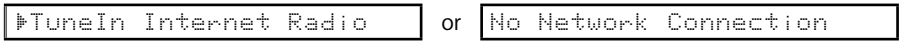

Content of the display is scrolled.

(4) Insert the USB flash drive into the USB port.

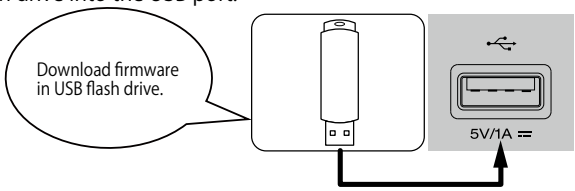

(5) Wait for at least 10 seconds before removing the USB flash drive.
(If the USB flash drive has an LED, this LED will be flashing. Remove the USB flash drive when the LED stops flashing.)

5. Normal Firmware Update Method from USB Flash Drive

5.1. File structure on USB flash drive

Copy the normal update files onto the USB flash drive in the following structure.

After unzipping the HW component USB update files for the target model and LEGO USB update files, store them in the root of the same USB flash drive.

Model Area	Download from SDI	
	For HW component	For LEGO component
North America (U)	DPMS_NR1508U_LEGO_xxxx.zip Product ID : 100100550100	heos_40.prod_x.xxx.xx.zip
Europe (N)	DPMS_NR1508N_LEGO_xxxx.zip Product ID : 100100550200	
China (K)	DPMS_NR1508K_LEGO_xxxx.zip Product ID : 100100550500	

USB flash drive root
+ NR1508xx_xxxx.update.auto
+ heos_40.prod.update.x-xxx-xx

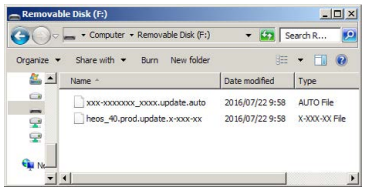

5.2. Start normal update

NOTE :
- Remove the LAN cable from this unit when updating.
  (Do not connect to a wired or wireless network.)

(1) Press the power button to turn on the power.
(2) Wait for this unit to start up.
(3) Set the input source to HEOS Music.
Check that the display is as shown below.

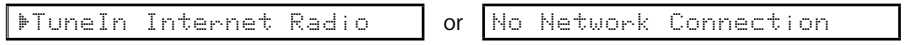

Content of the display is scrolled.

(4) Insert the USB flash drive into the USB port.

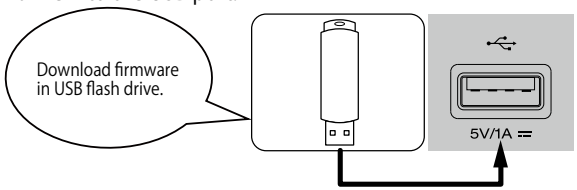

(5) USB Update starts automatically.
The Standby LED lights red.
Display during USB update

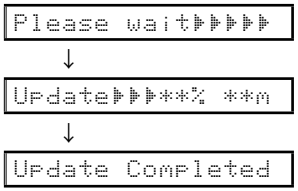

It takes a maximum of approximately 25 minutes for update to complete.

(6) The unit restarts when update is complete.

(7) After updating the firmware, check the version.
See "1. Version Display Mode"

---Cautions on Firmware Update---

- Do not remove the USB flash drive until updating is completed.
- Do not turn off the power until updating is completed.

It takes a maximum of approximately 25 minutes for update to complete.
Once an update is started, normal operations cannot be performed until it is completed.
The GUI menu settings and image adjustment settings of this unit may be initialized.
Note down the settings before updating, and set them again after updating.

6. Normal Firmware Update Method from OTA

Download the latest firmware from our website and update the firmware.

6.1. Network Connection

(1) System Requirements

- Internet Connection by Broadband Circuit
- Modem
- Router
- Ethernet cable (CAT-5 or greater is recommended)

(2) Setting

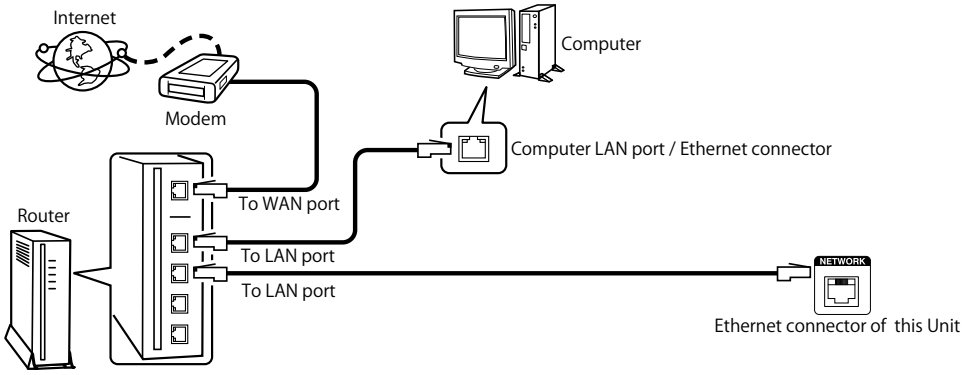

6.2. Check and update the firmware

Check if there is a firmware update available. It is also possible to check approximately how long the update will take.

(1) Press the "**SETUP**" button on the remote control to display the GUI menu.

(2) Press the cursor button to select "**General**" → "**Firmware**" → "**Update**" → "Check for Update".

(3) Check update

- If the firmware version is anything other than the latest version, select "**Update Now**" to update the firmware.
- "**No update required. Latest version installed.** "is displayed when the firmware version is up to date.

(4) OTA Update starts automatically.
The Standby LED lights red.
Display during OTA update

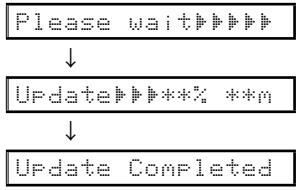

It takes a maximum of approximately 25 minutes for update to complete.

(5) The unit restarts when update is complete.

(6) After updating the firmware, check the version.
See "1. Version Display Mode"

---Cautions on Firmware Update---

- For the update procedure, a proper broadband Internet connection environment and settings are required.
- Do not turn off the power until updating is completed.
- It takes a maximum of approximately 25 minutes for update to complete.

Once an update is started, normal operations cannot be performed until it is completed.
The GUI menu settings and image adjustment settings of this unit may be initialized.
Note down the settings before updating, and set them again after updating.

7. About the error codes

See the table below for details on error codes and solutions when updating the firmware.
Error codes are displayed in 4 digits, YYXX(YY : DeviceID, XX : ErrorCode).

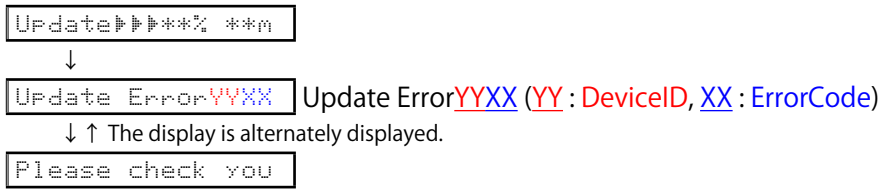

Content of the display is scrolled.

Remedies

Error Code (YYXX) (DeviceID/ErrorCode)	Remedies
000A	"Connection failed. Please check your network, then try again."
0009	"Update failed. Please check your network, then try again."
0009	"Upgrade failed. Please check your network, then try again."
YY00 YY01 YY02 YY03 YY04 YY07	"Please check your network, unplug and reconnect the power cord, and try again."
YY00 YY01 YY02 YY03 YY04 YY07	"Please unplug and reconnect the power cord, and try again."
0005	"Incompatible update file found on the USB device. Please check the file."
0006	"Update file is corrupted. Please check the file."
000B	"Please contact customer service in your area." ※ Check the power supply and communication lines of each device.

Device ID table

Device ID (YY)	Device Name
00	General
01	Main CPU
0B	Main FBL (No used)
11	DSP1 or DSP
12	DSP2 ※ Except : NR1508/NR1608/SR5012
13	DSP3 ※ Except : NR1508/NR1608/SR5012
19	DSP4 ※ Except : NR1508/NR1608/SR5012
15	Audio PLD
22	Video PLD ※ Except : NR1508
2A	GUI
33	LEGO

Error Code table

Type code (XX)	Description
00	Logical error
01	Error during erasing
02	Error during writing
03	Error during verifying
04	No access for the component
05	Package mismatched. Product ID, package version un-matched of the package manifest
06	Unpack dis-available of component package file
07	Time out
08	Latest firmware has already installed.
09	Error during download
0A	Error connection
0B	Hardware Error

---Checking the Firmware Version After the Update---

After updating the firmware, check the version.
See "1. Version Display Mode"

www.marantz.com

You can find your nearest authorized distributor or dealer on our website.

marantz® is a registered trademark.

Copyright © 2017 D&M Holdings Inc. All Rights Reserved.