TR-9130 SCHEMATIC DIAGRAM

YDØOIY

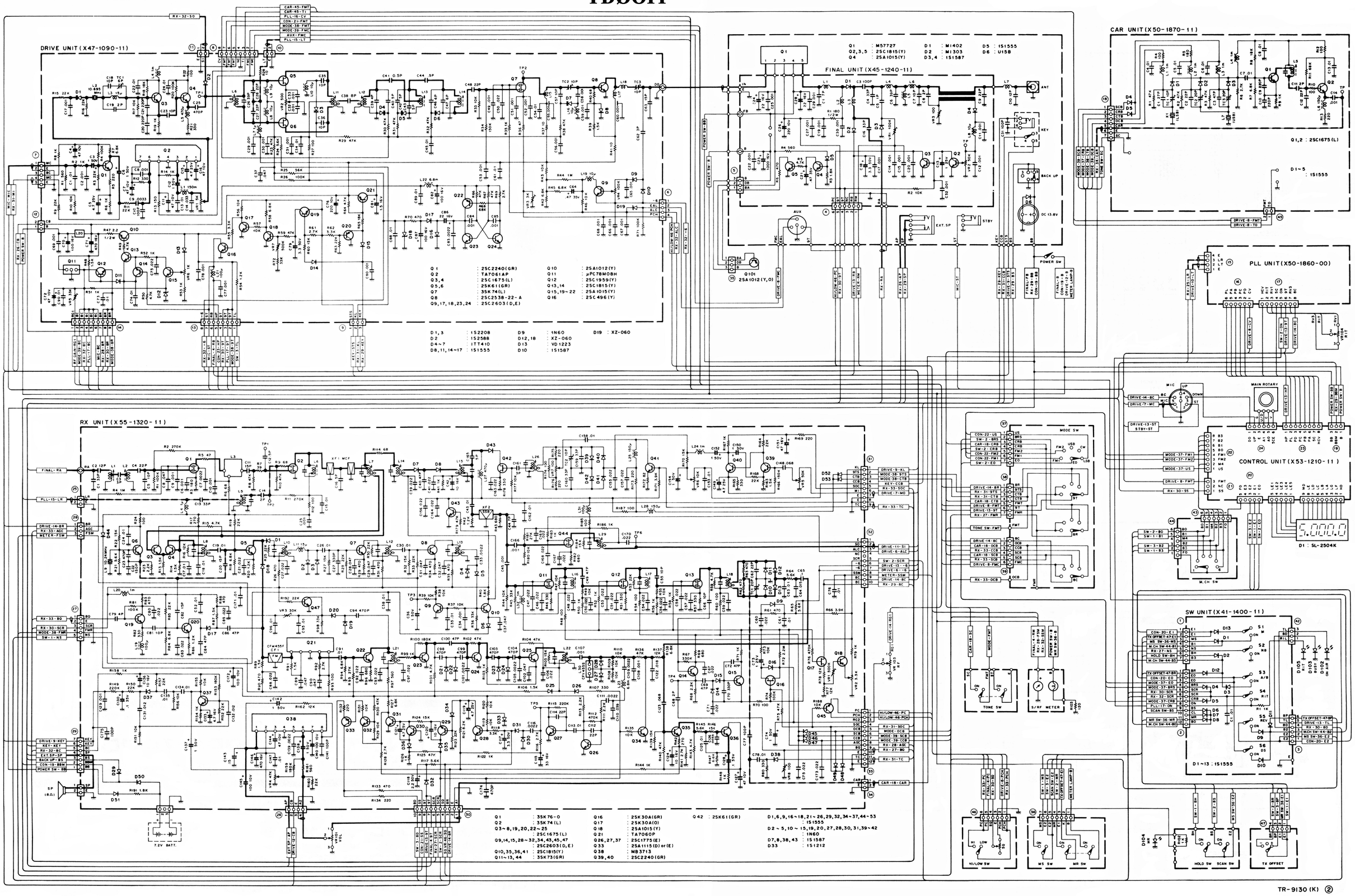

SCHEMATIC DIAGRAM

YDØOIY

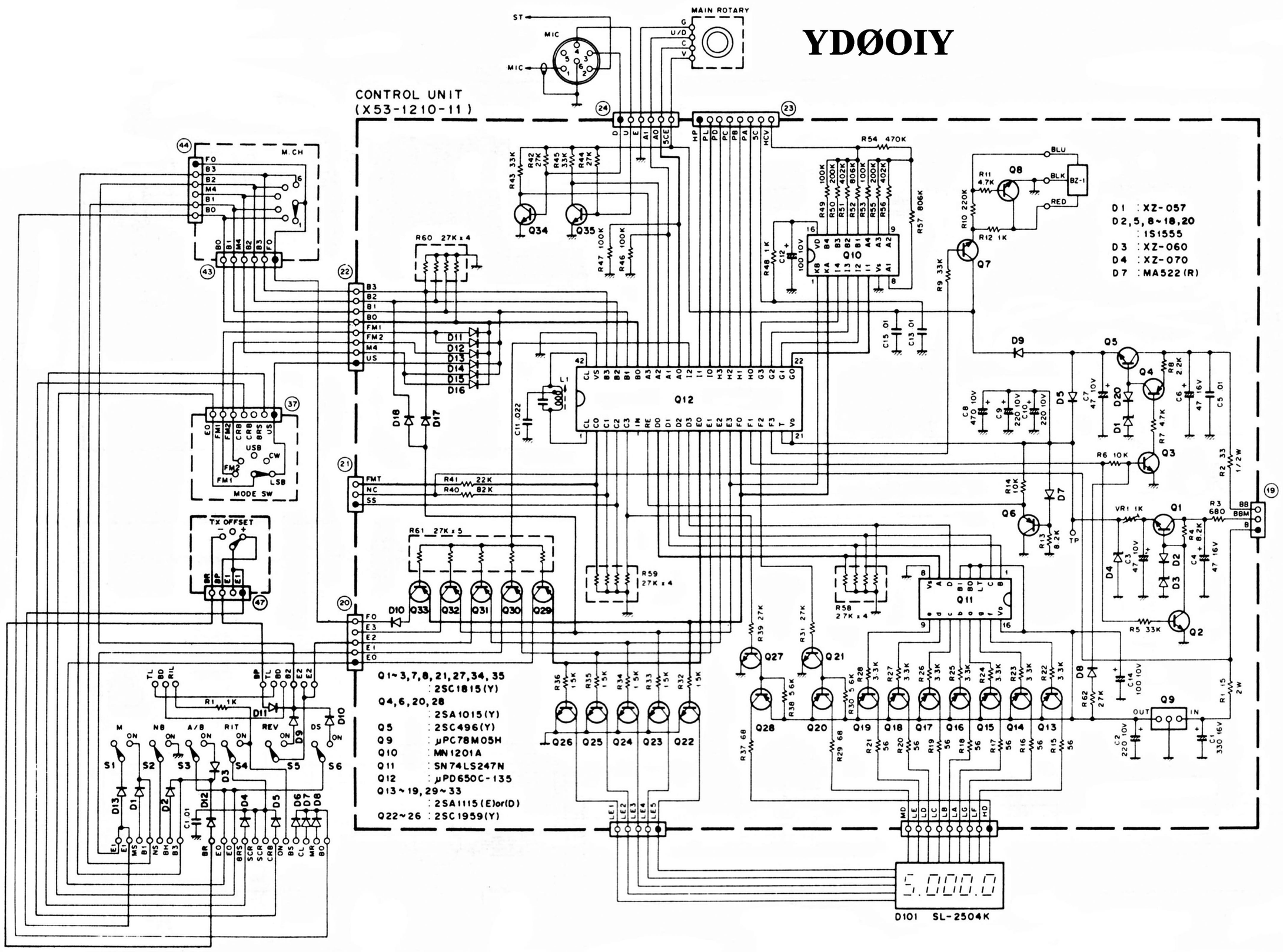

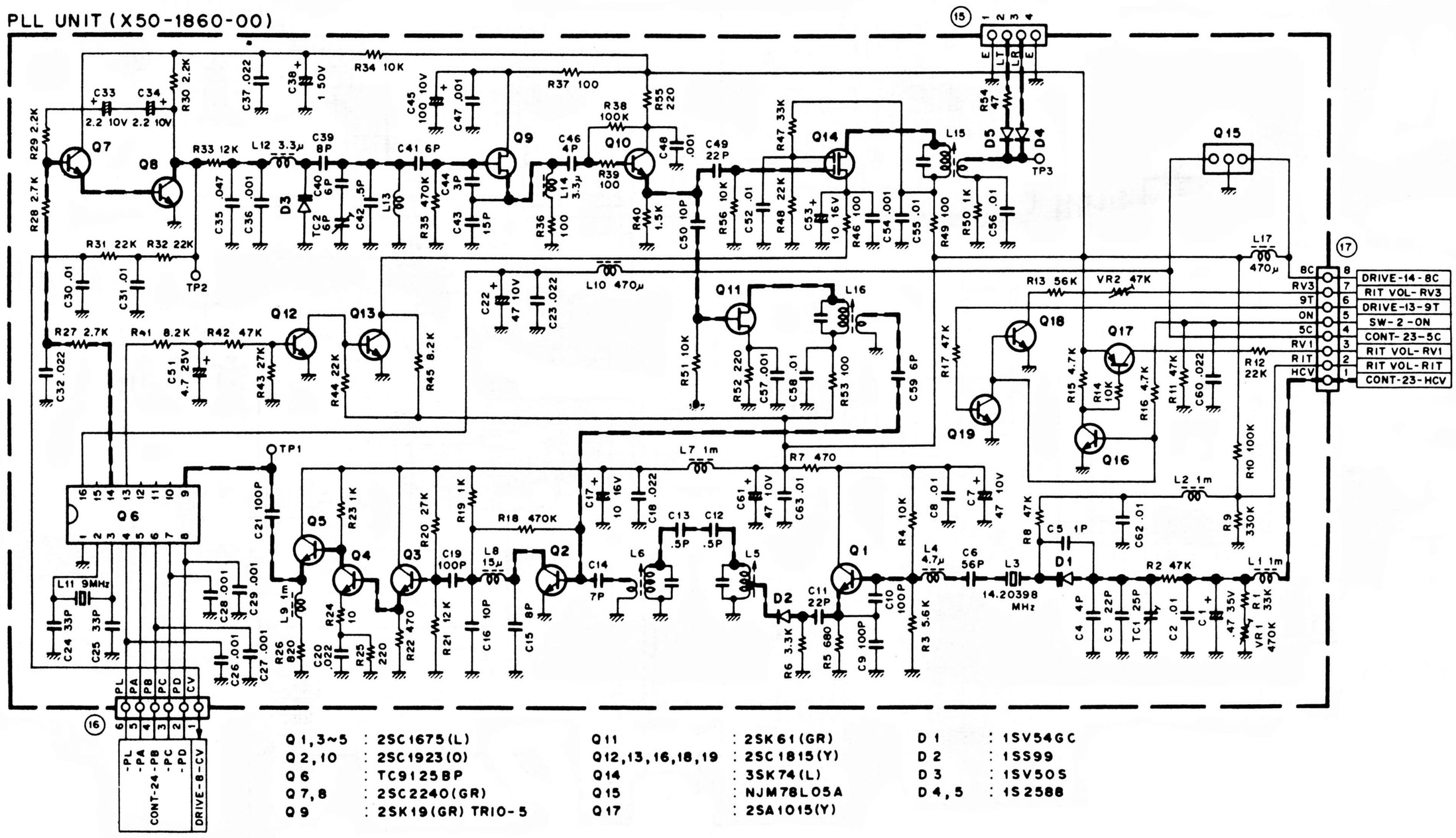

BLOCK DIAGRAM

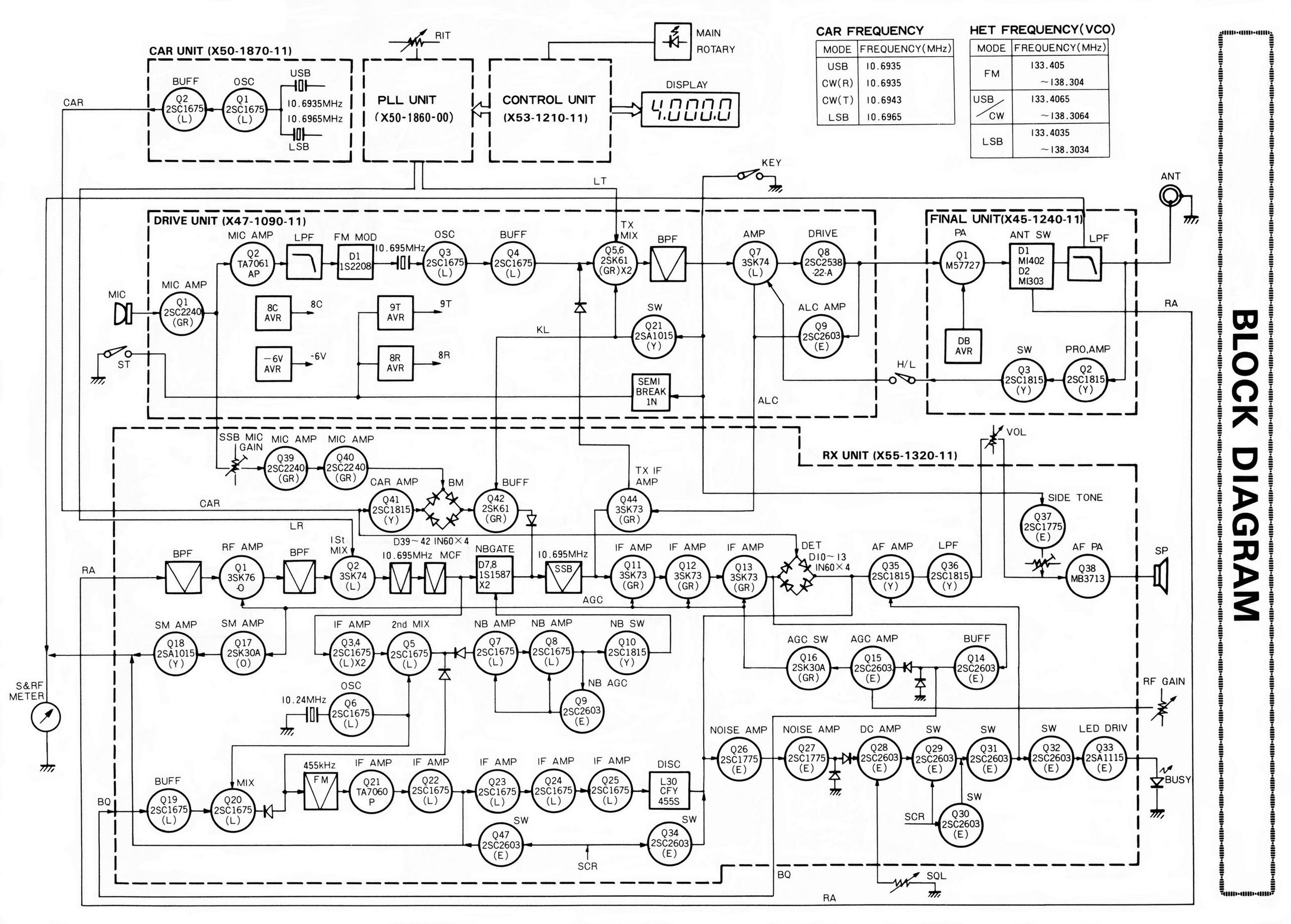

CAR FREQUENCY

MODE	FREQUENCY(MHz)
USB	10.6935
CW(R)	10.6935
CW(T)	10.6943
LSB	10.6965

HET FREQUENCY(VCO)

MODE	FREQUENCY(MHz)
FM	133.405 ～138.304
USB / CW	133.4065 ～138.3064
LSB	133.4035 ～138.3034

BLOCK DIAGRAM

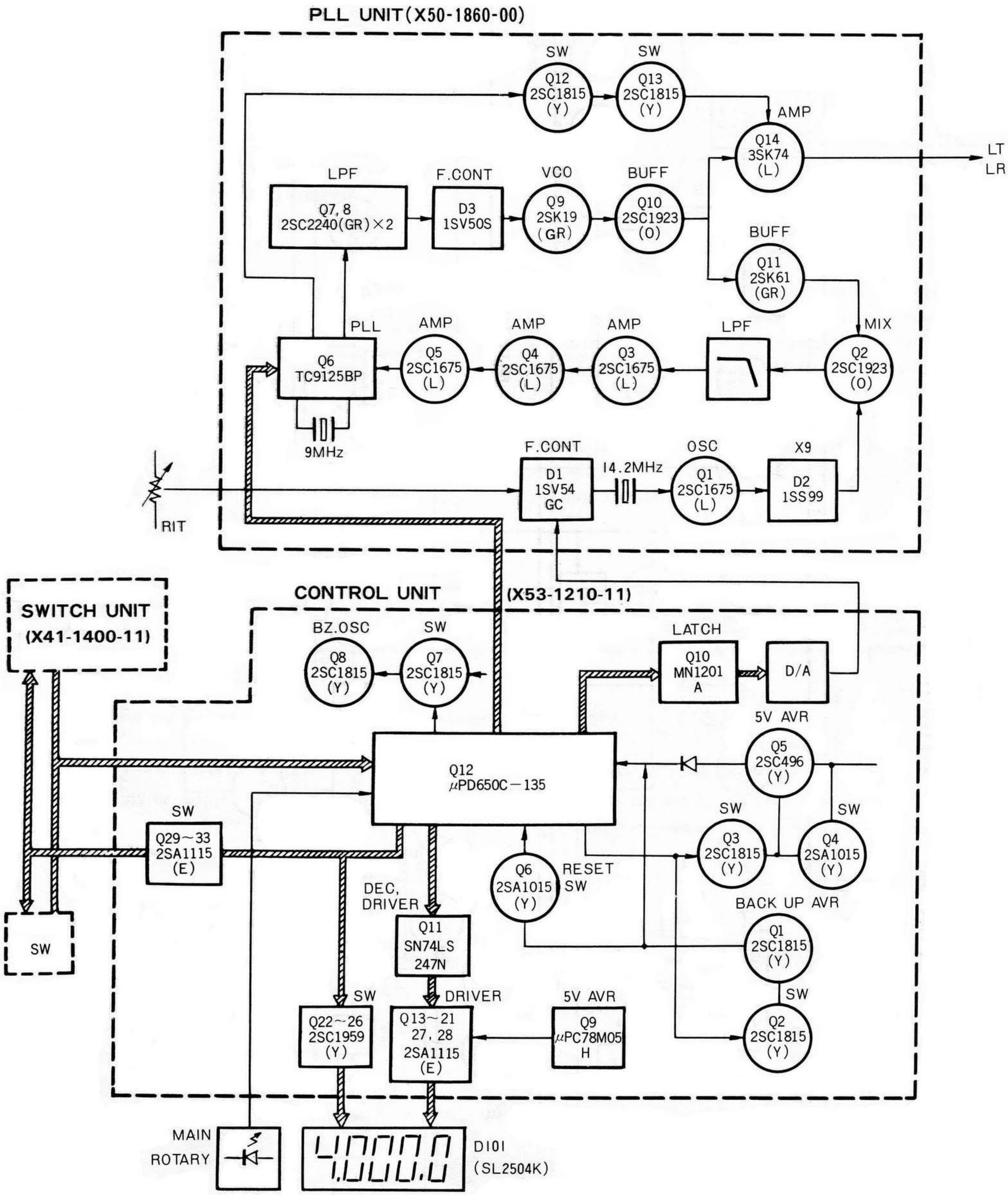

MEMORY
RF GAIN
RIT
M
NB
A/B
RIT
MODE
USB
FM2
CW
FM1
LSB
POWER/VOL
PUSH ON
KENWOOD
2m ALL MODE TRANSCEIVER
ON AIR
BUSY
S&RF
+20dB
TONE
REV
DS
SCAN
HOLD
SQUELCH
HI
LOW
MS
MR
MIC
TR-9130
POWER
SEND
OFF
REC
KENWOOD
SYSTEM BASE
BO-9A
PHONES

YDØOIY