NOTES:
1) THIS HARNESS ASSEMBLY IS TO BE BUILT PER THE CLASS 1 WIRING ASSEMBLY SPEC #122337 UNLESS OTHERWISE SPECIFIED (ON THIS DRAWING).
2) ALL WIRE TYPE TO BE GXL & CLASS 1 103349.
3) THE SHIELD CIRCUIT OF THE 103349 CABLE IS TO BE SPLICED UP TO AN 18GA BLACK WIRE AT "NETWORK BUSS" AND "DISCHARGE VALVE" ENDPOINTS. SEE DETAIL "A" FOR SPLICING INSTRUCTIONS.
4) CIRCUIT WIRES MARKED WITH "SPL", REFERENCE SPLICES.
5) LOOM THIS HARNESS VIA THE PRINT DRAWING, TO WITHIN 2" OF ALL BRANCH ENDPOINTS UNLESS OTHERWISE SPECIFIED AND OR NOTED. MAIN BODY & BRANCH LEGS TO HAVE "RED LOOM & RED ELECTRICAL TAPE" APPLIED. THE HARNESS SUPPLIER TO JUDGE FITMENT OF LOOM SIZES DURING ASSEMBLY FOR EACH BRANCH LEG AND BODY, REFERENCE SIZES HAS BEEN GIVEN.
6) NON LOOM SECTIONS OF THE HARNESS ARE FROM THE REAR OF THE CONNECTOR TO THE END AND OR START OF THE LOOMED BRANCH LEG.
7) HARNESS BUSS CABLE NETWORK ID MARKERS TO BE PLACED AT THE REAR OF EACH CONNECTOR, FOR THE CABLE AND OR CABLES THAT ARE CONNECTED TO THE "BUSS NETWORK".
8) HARNESS MAIN LABEL TO BE PLACED AT THE BASE OF THE HARNESS, REAR OF THE TEE BUSS NETWORK CONNECTOR.
9) LABEL REFERENCE EACH INDIVIDUAL CONNECTOR ENDPOINT, PANDUIT OR EQUIVALENT WEATHERPROOF LABEL TYPES ARE ACCEPTABLE. PLACE LABEL 1" FROM END OF LOOM AND WRAP AROUND LOOM.

PROJECTION:

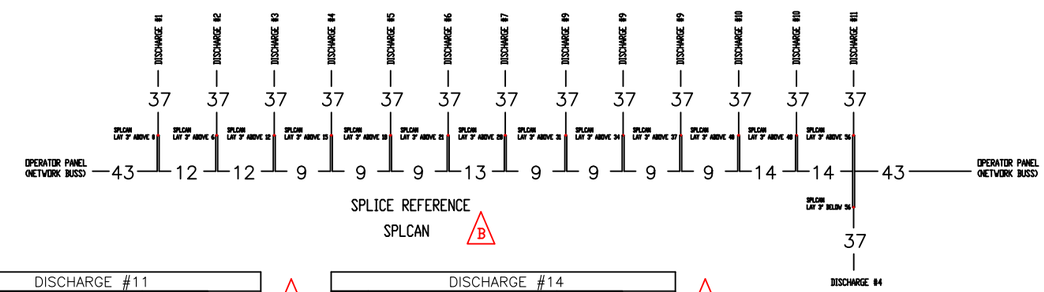

SPLICE REFERENCE
SPLCAN

DISCHARGE #4				
CONNECTOR DEUTSCH: DT06-6S GRY				
LOCK DEUTSCH: W6S (ORANGE)				
TERM DEUTSCH:0462-201-1631(20-16) GLD				
TERM DEUTSCH:0462-209-16141(16-14) TIN				
LABEL ENDPOINT: "DISCHARGE 4"				
POS	CIRCUIT	COLOR	GA	
1	CAN HIGH	YELLOW	103349	SPLCAN
2	CAN SHIELD	BLACK	18GXL	SPLCAN
3	DISCHARGE #3/4 GND	BLACK	14GXL	SPGND2
4	DISCHARGE #3/4 PWR	RED	14GXL	SPPWR2
5	114017	----	----	
6	CAN LOW	GREEN	103349	SPLCAN

DISCHARGE #5				
CONNECTOR DEUTSCH: DT06-6S GRY				
LOCK DEUTSCH: W6S (ORANGE)				
TERM DEUTSCH:0462-201-1631(20-16) GLD				
TERM DEUTSCH:0462-209-16141(16-14) TIN				
LABEL ENDPOINT: "DISCHARGE 5"				
POS	CIRCUIT	COLOR	GA	
1	CAN HIGH	YELLOW	103349	SPLCAN
2	CAN SHIELD	BLACK	18GXL	SPLCAN
3	DISCHARGE #5/6 GND	BLACK	14GXL	SPGND3
4	DISCHARGE #5/6 PWR	RED	14GXL	SPPWR3
5	114017	----	----	
6	CAN LOW	GREEN	103349	SPLCAN

DISCHARGE #6				
CONNECTOR DEUTSCH: DT06-6S GRY				
LOCK DEUTSCH: W6S (ORANGE)				
TERM DEUTSCH:0462-201-1631(20-16) GLD				
TERM DEUTSCH:0462-209-16141(16-14) TIN				
LABEL ENDPOINT: "DISCHARGE 6"				
POS	CIRCUIT	COLOR	GA	
1	CAN HIGH	YELLOW	103349	SPLCAN
2	CAN SHIELD	BLACK	18GXL	SPLCAN
3	DISCHARGE #5/6 GND	BLACK	14GXL	SPGND3
4	DISCHARGE #5/6 PWR	RED	14GXL	SPPWR3
5	114017	----	----	
6	CAN LOW	GREEN	103349	SPLCAN

DISCHARGE #7				
CONNECTOR DEUTSCH: DT06-6S GRY				
LOCK DEUTSCH: W6S (ORANGE)				
TERM DEUTSCH:0462-201-1631(20-16) GLD				
TERM DEUTSCH:0462-209-16141(16-14) TIN				
LABEL ENDPOINT: "DISCHARGE 7"				
POS	CIRCUIT	COLOR	GA	
1	CAN HIGH	YELLOW	103349	SPLCAN
2	CAN SHIELD	BLACK	18GXL	SPLCAN
3	DISCHARGE #7/8 GND	BLACK	14GXL	SPGND4
4	DISCHARGE #7/8 PWR	RED	14GXL	SPPWR4
5	114017	----	----	
6	CAN LOW	GREEN	103349	SPLCAN

DISCHARGE #8				
CONNECTOR DEUTSCH: DT06-6S GRY				
LOCK DEUTSCH: W6S (ORANGE)				
TERM DEUTSCH:0462-201-1631(20-16) GLD				
TERM DEUTSCH:0462-209-16141(16-14) TIN				
LABEL ENDPOINT: "DISCHARGE 8"				
POS	CIRCUIT	COLOR	GA	
1	CAN HIGH	YELLOW	103349	SPLCAN
2	CAN SHIELD	BLACK	18GXL	SPLCAN
3	DISCHARGE #7/8 GND	BLACK	14GXL	SPGND4
4	DISCHARGE #7/8 PWR	RED	14GXL	SPPWR4
5	114017	----	----	
6	CAN LOW	GREEN	103349	SPLCAN

DISCHARGE #9				
CONNECTOR DEUTSCH: DT06-6S GRY				
LOCK DEUTSCH: W6S (ORANGE)				
TERM DEUTSCH:0462-201-1631(20-16) GLD				
TERM DEUTSCH:0462-209-16141(16-14) TIN				
LABEL ENDPOINT: "DISCHARGE 9"				
POS	CIRCUIT	COLOR	GA	
1	CAN HIGH	YELLOW	103349	SPLCAN
2	CAN SHIELD	BLACK	18GXL	SPLCAN
3	DISCHARGE #9/10 GND	BLACK	14GXL	SPGND5
4	DISCHARGE #9/10 PWR	RED	14GXL	SPPWR5
5	114017	----	----	
6	CAN LOW	GREEN	103349	SPLCAN

DISCHARGE #10				
CONNECTOR DEUTSCH: DT06-6S GRY				
LOCK DEUTSCH: W6S (ORANGE)				
TERM DEUTSCH:0462-201-1631(20-16) GLD				
TERM DEUTSCH:0462-209-16141(16-14) TIN				
LABEL ENDPOINT: "DISCHARGE 10"				
POS	CIRCUIT	COLOR	GA	
1	CAN HIGH	YELLOW	103349	SPLCAN
2	CAN SHIELD	BLACK	18GXL	SPLCAN
3	DISCHARGE #9/10 GND	BLACK	14GXL	SPGND5
4	DISCHARGE #9/10 PWR	RED	14GXL	SPPWR5
5	114017	----	----	
6	CAN LOW	GREEN	103349	SPLCAN

OFFICER PANEL (NETWORK BUSS)				
CONNECTOR DEUTSCH: DT06-3S (GRY)				
LOCK DEUTSCH: W3S (ORANGE)				
TERM DEUTSCH:0462-201-1631(20-16) GLD				
LABEL ENDPOINT: "OPERATOR PANEL"				
POS	CIRCUIT	COLOR	GA	
A	CAN HIGH	YELLOW	103349	SPLCAN
B	CAN LOW	GREEN	103349	SPLCAN
C	CAN SHIELD	BLACK	18GXL	SPLCAN

DISCHARGE #11				
CONNECTOR DEUTSCH: DT06-6S GRY				
LOCK DEUTSCH: W6S (ORANGE)				
TERM DEUTSCH:0462-201-1631(20-16) GLD				
TERM DEUTSCH:0462-209-16141(16-14) TIN				
LABEL ENDPOINT: "DISCHARGE 11"				
POS	CIRCUIT	COLOR	GA	
1	CAN HIGH	YELLOW	103349	SPLCAN
2	CAN SHIELD	BLACK	18GXL	SPLCAN
3	CROSSLAY #11/12 GND	BLACK	14GXL	SPGND6
4	CROSSLAY #11/12 PWR	RED	14GXL	SPPWR6
5	114017	----	----	
6	CAN LOW	GREEN	103349	SPLCAN

DISCHARGE #12				
CONNECTOR DEUTSCH: DT06-6S GRY				
LOCK DEUTSCH: W6S (ORANGE)				
TERM DEUTSCH:0462-201-1631(20-16) GLD				
TERM DEUTSCH:0462-209-16141(16-14) TIN				
LABEL ENDPOINT: "DISCHARGE 12"				
POS	CIRCUIT	COLOR	GA	
1	CAN HIGH	YELLOW	103349	SPLCAN
2	CAN SHIELD	BLACK	18GXL	SPLCAN
3	CROSSLAY #11/12 GND	BLACK	14GXL	SPGND6
4	CROSSLAY #11/12 PWR	RED	14GXL	SPPWR6
5	114017	----	----	
6	CAN LOW	GREEN	103349	SPLCAN

DISCHARGE #13				
CONNECTOR DEUTSCH: DT06-6S GRY				
LOCK DEUTSCH: W6S (ORANGE)				
TERM DEUTSCH:0462-201-1631(20-16) GLD				
TERM DEUTSCH:0462-209-16141(16-14) TIN				
LABEL ENDPOINT: "DISCHARGE 13"				
POS	CIRCUIT	COLOR	GA	
1	CAN HIGH	YELLOW	103349	SPLCAN
2	CAN SHIELD	BLACK	18GXL	SPLCAN
3	CROSSLAY #13/14 GND	BLACK	14GXL	SPGND7
4	CROSSLAY #13/14 PWR	RED	14GXL	SPPWR7
5	114017	----	----	
6	CAN LOW	GREEN	103349	SPLCAN

SOURCE GROUNDS			
OPEN END WIRE: N/C (CIRCUIT GROUPED)			
LABEL ENDPOINT: "SOURCE GNDS"			
POS	CIRCUIT	COLOR	GA
1	PANEL HARNESS GND	BLACK	10GXL
2	DISCHARGE #1/2 GND	BLACK	14GXL
3	DISCHARGE #3/4 GND	BLACK	14GXL
4	DISCHARGE #5/6 GND	BLACK	14GXL
5	DISCHARGE #7/8 GND	BLACK	14GXL
6	DISCHARGE #9/10 GND	BLACK	14GXL
7	DISCHARGE #11/12 GND	BLACK	14GXL
8	DISCHARGE #13/14 GND	BLACK	14GXL

DISCHARGE #14				
CONNECTOR DEUTSCH: DT06-6S GRY				
LOCK DEUTSCH: W6S (ORANGE)				
TERM DEUTSCH:0462-201-1631(20-16) GLD				
TERM DEUTSCH:0462-209-16141(16-14) TIN				
LABEL ENDPOINT: "DISCHARGE 14"				
POS	CIRCUIT	COLOR	GA	
1	CAN HIGH	YELLOW	103349	SPLCAN
2	CAN SHIELD	BLACK	18GXL	SPLCAN
3	CROSSLAY #13/14 GND	BLACK	14GXL	SPGND7
4	CROSSLAY #13/14 PWR	RED	14GXL	SPPWR7
5	114017	----	----	
6	CAN LOW	GREEN	103349	SPLCAN

BREAKER BOX CONNECTOR 1			
CONNECTOR DEUTSCH: DTP06-4S-CE02 (BLK)			
LOCK DEUTSCH: WP-4S (ORANGE)			
TERM DEUTSCH:0462-203-12141(12-14) TIN			
LABEL ENDPOINT: "BRKR CON 1"			
POS	CIRCUIT	COLOR	GA
1	PANEL HARNESS POWER	RED	10GXL
2	DISCHARGE 1/2 POWER	RED	14GXL
3	DISCHARGE 3/4 POWER	RED	14GXL
4	DISCHARGE 5/6 POWER	RED	14GXL

BREAKER BOX CONNECTOR 2			
CONNECTOR DEUTSCH: DTP06-4S-CE02 (BLK)			
LOCK DEUTSCH: WP-4S (ORANGE)			
TERM DEUTSCH:0462-203-12141(12-14) TIN			
LABEL ENDPOINT: "BRKR CON 2"			
POS	CIRCUIT	COLOR	GA
1	DISCHARGE 7/8 POWER	RED	14GXL
2	DISCHARGE 9/10 POWER	RED	14GXL
3	DISCHARGE 11/12 POWER	RED	14GXL
4	DISCHARGE 13/14 POWER	RED	14GXL

PANEL HARNESS CONNECTIONS			
CONNECTOR DELPHI: 12010973 (SHROUD/BLK)			
TERMINAL DELPHI: 12124587 MALE (TIN)			
SEAL DELPHI: 15324981 (BLUE 12-10GA)			
LABEL ENDPOINT: "PANEL HARNESS"			
POS	CIRCUIT	COLOR	GA
A	PANEL HARNESS PWR	RED	10GXL
B	PANEL HARNESS GND	BLACK	10GXL

SPLICE REFERENCES

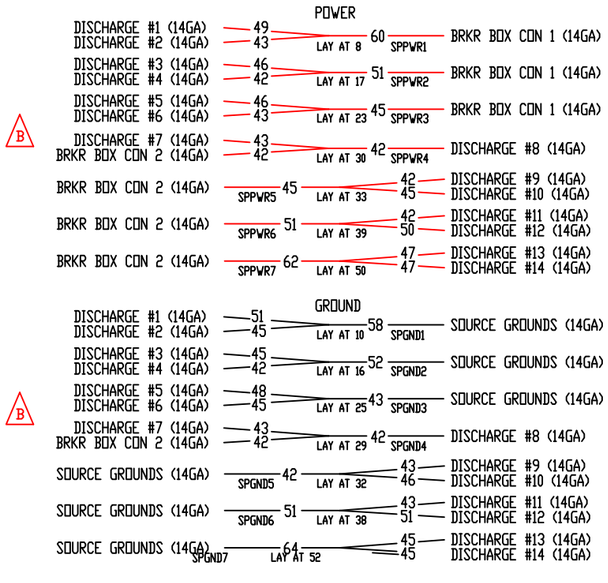

MASTER CIRCUIT LEGEND					
	CIRCUIT	COLOR	GA	SPL	LENGTH
1	CAN	GREY	103349	SPLCAN	61'
2	NO IMPRINT	BLACK	18GXL	SPLCAN	4'
3	DISCHARGE #1/2 GND	BLACK	14GXL	SPGND1	13'
4	DISCHARGE #3/4 GND	BLACK	14GXL	SPGND2	12'
5	DISCHARGE #5/6 GND	BLACK	14GXL	SPGND3	12'
6	DISCHARGE #7/8 GND	BLACK	14GXL	SPGND4	11'
7	DISCHARGE #9/10 GND	BLACK	14GXL	SPGND5	11'
8	DISCHARGE #11/12 GND	BLACK	14GXL	SPGND6	12'
9	DISCHARGE #13/14 GND	BLACK	14GXL	SPGND7	13'
10	DISCHARGE #1/2 PWR	RED	14GXL	SPPWR1	13'
11	DISCHARGE #3/4 PWR	RED	14GXL	SPPWR2	12'
12	DISCHARGE #5/6 PWR	RED	14GXL	SPPWR3	12'
13	DISCHARGE #7/8 PWR	RED	14GXL	SPPWR4	11'
14	DISCHARGE #9/10 PWR	RED	14GXL	SPPWR5	11'
15	DISCHARGE #11/12 PWR	RED	14GXL	SPPWR6	12'
16	DISCHARGE #13/14 PWR	RED	14GXL	SPPWR7	13'
17	PANEL HARNESS PWR	RED	10GXL	----	5'
18	PANEL HARNESS GND	BLACK	10GXL	----	5'

REVISIONS						
ECN	REV.	ZONE	CHANGED FROM	BY	DATE	APVD
	A	-	INITIAL RELEASE	KA	10/30/19	JSJ
4956	B	-	SHORTTENED CAN BUS SPLICE POINTS OFF OF BACKBONE. SPLICED PWR & GND CIRCUITS FOR DISCHARGE VALVES, MATCHING BREAKER CONNECTIONS. ADDED PANEL HARNESS BRANCH LEG BREAKOUT CONNECTION. REWORKED CAN BUS SPLICE REFERENCE. ADDED PWR & GND SPLICE REFERENCES. ADDED DTP SERIES CONNECTORS FOR POWER CONNECTIONS TO BREAKER BOX. REVISED DRAWING NOTES FOR ENDPOINT LABELING.	KA	2/12/20	JSJ

UNLESS OTHERWISE SPECIFIED
DIMENSIONS ARE IN MILLIMETERS
[INCHES ARE FOR REFERENCE, ONLY]
TOLERANCE FOR MILLIMETER DIMENSIONS:
X: ±1
X.X: ±0.5
X.XX: ±0.25
X.XXX: ±0.125
ANGLES: ±0.25°
SURFACE TEXTURE IN µm Ra
REMOVE ALL SHARP EDGES, 0.25MAX

COPYRIGHT ©
NOT TO BE REPRODUCED OR USED TO MAKE OTHER DRAWINGS OR MACHINERY

FSG OF IDEX CORPORATION

HALE GODIVA Class1

MATERIAL

MADE FROM

FINISH

PROJECT FSG-PRJ-1320

TITLE HARNESS ELECTRIC VALVE CAN BUSS (DISCHARGE)

DRAWN	KA	SIZE B	DRAWING NUMBER 513-00145-002	REV B
APPROVED	JSJ			
DATE	10/30/19	SCALE 1:2		SHEET 2 OF 2