NOTES:
1) THIS HARNESS ASSEMBLY IS TO BE BUILT PER THE CLASS 1 WIRING ASSEMBLY SPEC #122337 UNLESS OTHERWISE SPECIFIED (ON THIS DRAWING).
2) ALL WIRE TYPE TO BE GXL & CLASS 1 103349.
3) THE SHIELD CIRCUIT OF THE 103349 CABLE IS TO BE SPLICED UP TO AN 18GA BLACK WIRE AT "NETWORK BUSS" AND "DISCHARGE VALVE" ENDPOINTS. SEE DETAIL "A" FOR SPLICING INSTRUCTIONS. B
4) CIRCUIT WIRES MARKED WITH "SPL", REFERENCE SPLICES.
5) LOOM THIS HARNESS VIA THE PRINT DRAWING, TO WITHIN 2" OF ALL BRANCH ENDPOINTS UNLESS OTHERWISE SPECIFIED AND OR NOTED. MAIN BODY & BRANCH LEGS TO HAVE "GREEN LOOM & GREEN ELECTRICAL TAPE" APPLIED. THE HARNESS SUPPLIER TO JUDGE FITMENT OF LOOM SIZES DURING ASSEMBLY FOR EACH BRANCH LEG AND BODY, REFERENCE SIZES HAS BEEN GIVEN.
6) NON LOOM SECTIONS OF THE HARNESS ARE FROM THE REAR OF THE CONNECTOR TO THE END AND OR START OF THE LOOMED BRANCH LEG.
7) HARNESS BUSS CABLE NETWORK ID MARKERS TO BE PLACED AT THE REAR OF EACH CONNECTOR, FOR THE CABLE AND OR CABLES THAT ARE CONNECTED TO THE "BUSS NETWORK".
8) HARNESS MAIN LABEL TO BE PLACED AT THE BASE OF THE HARNESS, REAR OF THE TEE BUSS NETWORK CONNECTOR.
9) LABEL REFERENCE EACH INDIVIDUAL CONNECTOR ENDPOINT, PANDUIT OR EQUIVALENT WEATHERPROOF LABEL TYPES ARE ACCEPTABLE. PLACE LABEL 1" FROM END OF LOOM AND WRAP AROUND LOOM.

PROJECTION:

NETWORK BUSS (OPERATOR SIDE)
CONNECTOR DEUTSCH: DT06-3S (GRY)
LOCK DEUTSCH: W3S-1939 (BLUE)
TERM DEUTSCH:0462-201-1631(20-16) GLD
LABEL ENDPOINT: "NETWORK BUSS OPS"

POS	CIRCUIT	COLOR	GA	
1	CAN HIGH	YELLOW	103349	SPLCAN
2	CAN LOW	GREEN	103349	SPLCAN
3	CAN SHIELD	BLACK	18GXL	SPLCAN

NETWORK BUSS (OFFICER SIDE)
CONNECTOR DEUTSCH: DT06-3S GRY
LOCK DEUTSCH: W3S-1939 (BLUE)
TERM DEUTSCH:0462-201-1631(20-16) GLD
LABEL ENDPOINT: "NETWORK BUSS OFS"

POS	CIRCUIT	COLOR	GA	
1	CAN HIGH	YELLOW	103349	SPLCAN
2	CAN LOW	GREEN	103349	SPLCAN
3	CAN SHIELD	BLACK	18GXL	SPLCAN

LEFT PONY
CONNECTOR DEUTSCH: DT06-6S (GRY) B
LOCK DEUTSCH: W6S (ORANGE)
TERM DEUTSCH:0462-201-1631(20-16) GLD
TERM DEUTSCH:0462-209-16141(16-14) TIN
LABEL ENDPOINT: "LEFT PONY"

POS	CIRCUIT	COLOR	GA	
1	CAN HIGH	YELLOW	103349	SPLCAN
2	CAN SHIELD	BLACK	18GXL	SPLCAN
3	INTAKE LH/RH PONY GND	BLACK	14GXL	SPLPG
4	INTAKE LH/RH PONY PWR	RED	14GXL	SPLPP
5	114017	----	----	
6	CAN LOW	GREEN	103349	SPLCAN

RIGHT PONY
CONNECTOR DEUTSCH: DT06-6S (GRY) B
LOCK DEUTSCH: W6S (ORANGE)
TERM DEUTSCH:0462-201-1631(20-16) GLD
TERM DEUTSCH:0462-209-16141(16-14) TIN
LABEL ENDPOINT: "RIGHT PONY"

POS	CIRCUIT	COLOR	GA	
1	CAN HIGH	YELLOW	103349	SPLCAN
2	CAN SHIELD	BLACK	18GXL	SPLCAN
3	INTAKE LH/RH PONY GND	BLACK	14GXL	SPLPG
4	INTAKE LH/RH PONY PWR	RED	14GXL	SPLPP
5	114017	----	----	
6	CAN LOW	GREEN	103349	SPLCAN

TANK FILL
CONNECTOR DEUTSCH: DT06-6S (GRY) B
LOCK DEUTSCH: W6S (ORANGE)
TERM DEUTSCH:0462-201-1631(20-16) GLD
TERM DEUTSCH:0462-209-16141(16-14) TIN
LABEL ENDPOINT: "TANK FILL"

POS	CIRCUIT	COLOR	GA	
1	CAN HIGH	YELLOW	103349	SPLCAN
2	CAN SHIELD	BLACK	18GXL	SPLCAN
3	TNK FILL/TNK 2 PMP GND	BLACK	14GXL	SPLPTG
4	TNK FILL/TNK 2 PMP PWR	RED	14GXL	SPLPTP
5	114017	----	----	
6	CAN LOW	GREEN	103349	SPLCAN

TANK TO PUMP
CONNECTOR DEUTSCH: DT06-6S (GRY) B
LOCK DEUTSCH: W6S (ORANGE)
TERM DEUTSCH:0462-201-1631(20-16) GLD
TERM DEUTSCH:0462-209-16141(16-14) TIN
LABEL ENDPOINT: "TANK TO PUMP"

POS	CIRCUIT	COLOR	GA	
1	CAN HIGH	YELLOW	103349	SPLCAN
2	CAN SHIELD	BLACK	18GXL	SPLCAN
3	TNK FILL/TNK 2 PMP GND	BLACK	14GXL	SPLPTG
4	TNK FILL/TNK 2 PMP PWR	RED	14GXL	SPLPTP
5	114017	----	----	
6	CAN LOW	GREEN	103349	SPLCAN

LEFT MIV CAN
CONNECTOR DEUTSCH: DT04-3P (GRY) B
LOCK DEUTSCH: W3P (GREEN)
TERM DEUTSCH:0460-202-1631(20-16) GLD
LABEL ENDPOINT: "LEFT MIV"

POS	CIRCUIT	COLOR	GA	
1	CAN HIGH	YELLOW	103349	SPLCAN
2	CAN LOW	GREEN	103349	SPLCAN
3	CAN SHIELD	BLACK	18GXL	SPLCAN

LEFT MIV POWER CONNECTION
CONNECTOR DELPHI: 12010973 (SHROUD/BLK) B
TERMINAL DELPHI: 12124587 MALE (TIN)
SEAL DELPHI: 15324981 (BLUE 12-10GA)
LABEL ENDPOINT: "LH MIV PWR"

POS	CIRCUIT	COLOR	GA	
A	LH/T-PORT MIV PWR	RED	12GXL	SPLTMP
B	LH/T-PORT MIV GND	BLACK	12GXL	SPLTMG

T-PORT MIV CAN
CONNECTOR DEUTSCH: DT04-3P (GRY) B
LOCK DEUTSCH: W3P (GREEN)
TERM DEUTSCH:0460-202-1631(20-16) GLD
LABEL ENDPOINT: "T-PORT MIV"

POS	CIRCUIT	COLOR	GA	
1	CAN HIGH	YELLOW	103349	SPLCAN
2	CAN LOW	GREEN	103349	SPLCAN
3	CAN SHIELD	BLACK	18GXL	SPLCAN

T-PORT MIV PWR
CONNECTOR DELPHI: 12010973 (SHROUD/BLK) B
TERMINAL DELPHI: 12124587 MALE (TIN)
SEAL DELPHI: 15324981 (BLUE 12-10GA)
LABEL ENDPOINT: "T-PORT MIV PWR"

POS	CIRCUIT	COLOR	GA	
A	LH/T-PORT MIV PWR	RED	12GXL	SPLTMP
B	LH/T-PORT MIV GND	BLACK	12GXL	SPLTMG

RIGHT MIV CAN
CONNECTOR DEUTSCH: DT04-3P (GRY) B
LOCK DEUTSCH: W3P (GREEN)
TERM DEUTSCH:0460-202-1631(20-16) GLD
LABEL ENDPOINT: "RIGHT MIV"

POS	CIRCUIT	COLOR	GA	
1	CAN HIGH	YELLOW	103349	SPLCAN
2	CAN LOW	GREEN	103349	SPLCAN
3	CAN SHIELD	BLACK	18GXL	SPLCAN

RIGHT MIV POWER CONNECTION
CONNECTOR DELPHI: 12010973 (SHROUD/BLK) B
TERMINAL DELPHI: 12124587 MALE (TIN)
SEAL DELPHI: 15324981 (BLUE 12-10GA)
LABEL ENDPOINT: "RH MIV PWR"

POS	CIRCUIT	COLOR	GA	
A	RH/BOTTOM MIV PWR	RED	12GXL	SPLRBP
B	RH/BOTTOM MIV GND	BLACK	12GXL	SPLRBG

BOTTOM MIV CAN
CONNECTOR DEUTSCH: DT04-3P (GRY) B
LOCK DEUTSCH: W3P (GREEN)
TERM DEUTSCH:0460-202-1631(20-16) GLD
LABEL ENDPOINT: "BOTTOM MIV"

POS	CIRCUIT	COLOR	GA	
1	CAN HIGH	YELLOW	103349	SPLCAN
2	CAN LOW	GREEN	103349	SPLCAN
3	CAN SHIELD	BLACK	18GXL	SPLCAN

BOTTOM MIV POWER
CONNECTOR DELPHI: 12010973 (SHROUD/BLK) B
TERMINAL DELPHI: 12124587 MALE (TIN)
SEAL DELPHI: 15324981 (BLUE 12-10GA)
LABEL ENDPOINT: "BTTM MIV PWR"

POS	CIRCUIT	COLOR	GA	
A	RH/BOTTOM MIV PWR	RED	12GXL	SPLRBP
B	RH/BOTTOM MIV GND	BLACK	12GXL	SPLRBG

BREAKER BOX CONNECTOR 3
CONNECTOR DEUTSCH: DTP06-4S-CE02 (BLK) B
LOCK DEUTSCH: WP-4S (ORANGE)
TERM DEUTSCH:0462-203-12141(12-14) TIN
LABEL ENDPOINT: "BRKR CON 3"

POS	CIRCUIT	COLOR	GA	
1	TNK FILL/ TNK 2 PMP PWR	RED	14GXL	SPLPTP
2	INTAKE LH/RH PONY PWR	RED	14GXL	SPLPP
3	LH/T-PORT MIV PWR	RED	12GXL	SPLTMP
4	RH/BOTTOM MIV PWR	RED	12GXL	SPLRBP

SOURCE GROUNDS
OPEN END WIRE: N/C (CIRCUITS GROUPED) B
LABEL ENDPOINT: "SOURCE GNDS"

POS	CIRCUIT	COLOR	GA	
1	TNK FILL/TNK 2 PMP GND	BLACK	14GXL	SPLPTG
2	INTAKE LH/RH PONY GND	BLACK	14GXL	SPLPG
3	LH/T-PORT MIV GND	BLACK	12GXL	SPLTMG
4	RH/BOTTOM MIV GND	BLACK	12GXL	SPLRBG

SPLICE REFERENCES

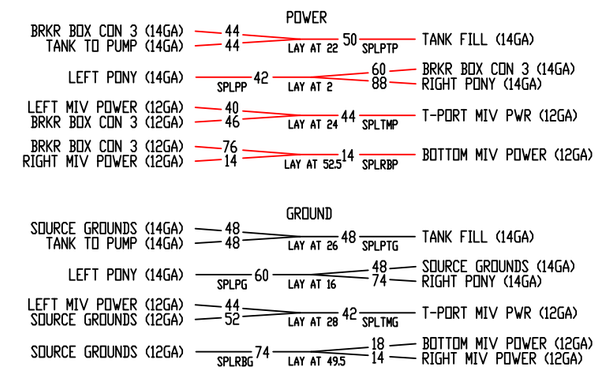

SPLICE REFERENCE SPLCAN

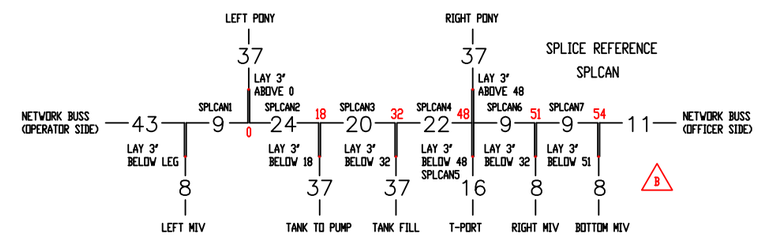

CAN BUSS INNER CONNECTING
SPLICE LEG LENGTHS

NETWORK BUSS (OPERATOR SIDE) = 43"
SPLCAN1 = 9"
SPLCAN2 = 24"
SPLCAN3 = 20"
SPLCAN4 = 22"
SPLCAN5 = 6" (ABOVE & BELOW NAIL 48)
SPLCAN6 = 9"
SPLCAN7 = 9"
CAN 8 = 37" (X4) AKRON VALVES
CAN 9 = 8" (X3) - LEFT, RIGHT & BOTTOM MIV
CAN 10 = 16" - T-PORT MIV
NETWORK BUSS (OFFICERR SIDE) = 11"

B B

MASTER CIRCUIT LEGEND

	CIRCUIT	COLOR	GA	SPL	LENGTH
1	CAN	CABLE	103349	SPLCAN	342"
2	NO IMPRINT	BLACK	18GXL	SPLCAN	40"
3	TNK FILL/TNK 2 PMP GND	BLACK	14GXL	SPLPTG	144"
4	INTAKE LH/RH PONY GND	BLACK	14GXL	SPLPG	182"
5	LH/T-PORT MIV GND	BLACK	12GXL	SPLTMG	138"
6	RH/BOTTOM MIV GND	BLACK	12GXL	SPLRBG	106"
7	TNK FILL/ TNK 2 PMP PWR	RED	14GXL	SPLPTP	138"
8	INTAKE LH/RH PONY PWR	RED	14GXL	SPLPP	190"
9	LH/T-PORT MIV PWR	RED	12GXL	SPLTMP	130"
10	RH/BOTTOM MIV PWR	RED	12GXL	SPLRBP	104"

REVISIONS

ECN	REV.	ZONE	CHANGED FROM	BY	DATE	APVD
	A	-	INITIAL RELEASE	KA	09/04/19	JSJ
4956	B	-	CORRECT PRINT TYPO'S AND DRAWING CORRECTIONS. UPDATED PRINT NOTES & REVISED FOR ENDPOINT LABELING. ADDED BRANCH LEGS FOR MIV MODULES CONTROL. UPDATED SPLICE DIAGRAM CUT LENGTHS FOR CAN. SPLICED PWR & GND CIRCUITS FOR INTAKE VALVES, MATCHING BREAKER CONNECTION. ADDED POWER & GROUND REFERENCES FOR CIRCUITS SPLICED. ADDED MATING TERMINATING RESISTOR TO NETWORK. ADDED DTP SERIES CONNECTOR FOR POWER CONNECTIONS TO BREAKER BOX. ADDED TABLES FOR MIV'S, BREAKER CONNECTION & GROUND TO SHEET 2 OF 2. UPDATED MASTER CIRCUIT LEGEND.	KA	2/12/20	JSJ

UNLESS OTHERWISE SPECIFIED
DIMENSIONS ARE IN MILLIMETERS
[INCHES ARE FOR REFERENCE, ONLY]
TOLERANCE FOR MILLIMETER DIMENSIONS:
X: ±1
X.X: ±0.5
X.XX: ±0.25
X.XXX: ±0.125
ANGLES: ±0.25°
SURFACE TEXTURE IN µm Ra
REMOVE ALL SHARP EDGES, 0.25MAX

COPYRIGHT ©
NOT TO BE REPRODUCED OR USED TO MAKE OTHER DRAWINGS OR MACHINERY

FSG OF IDEX CORPORATION

MATERIAL
MADE FROM
FINISH
PROJECT FSG-PRJ-1320

HALE GODIVA Class1

TITLE
HARNESS ELECTRIC VALVE CAN BUSS

DRAWN	KA	SIZE	DRAWING NUMBER	REV
APPROVED	JSJ	B	513-00144-003	B
DATE	09/04/19	SCALE 1:2		SHEET 2 OF 2