# EICO MODEL ST-70

| | |
|---|---|
| TRADE NAME | Eico Model ST-70 |
| MANUFACTURER | Electronic Instrument Co., Inc., 3300 Northern Blvd., Long Island City 1, N. Y. |
| TYPE SET | AC Operated 12 Tube Stereo Amplifier |
| POWER SUPPLY | 110 — 120 Volts AC, 60 Cycles RATING 150 Watts, 1.4 Amp. @117 Volts DC |

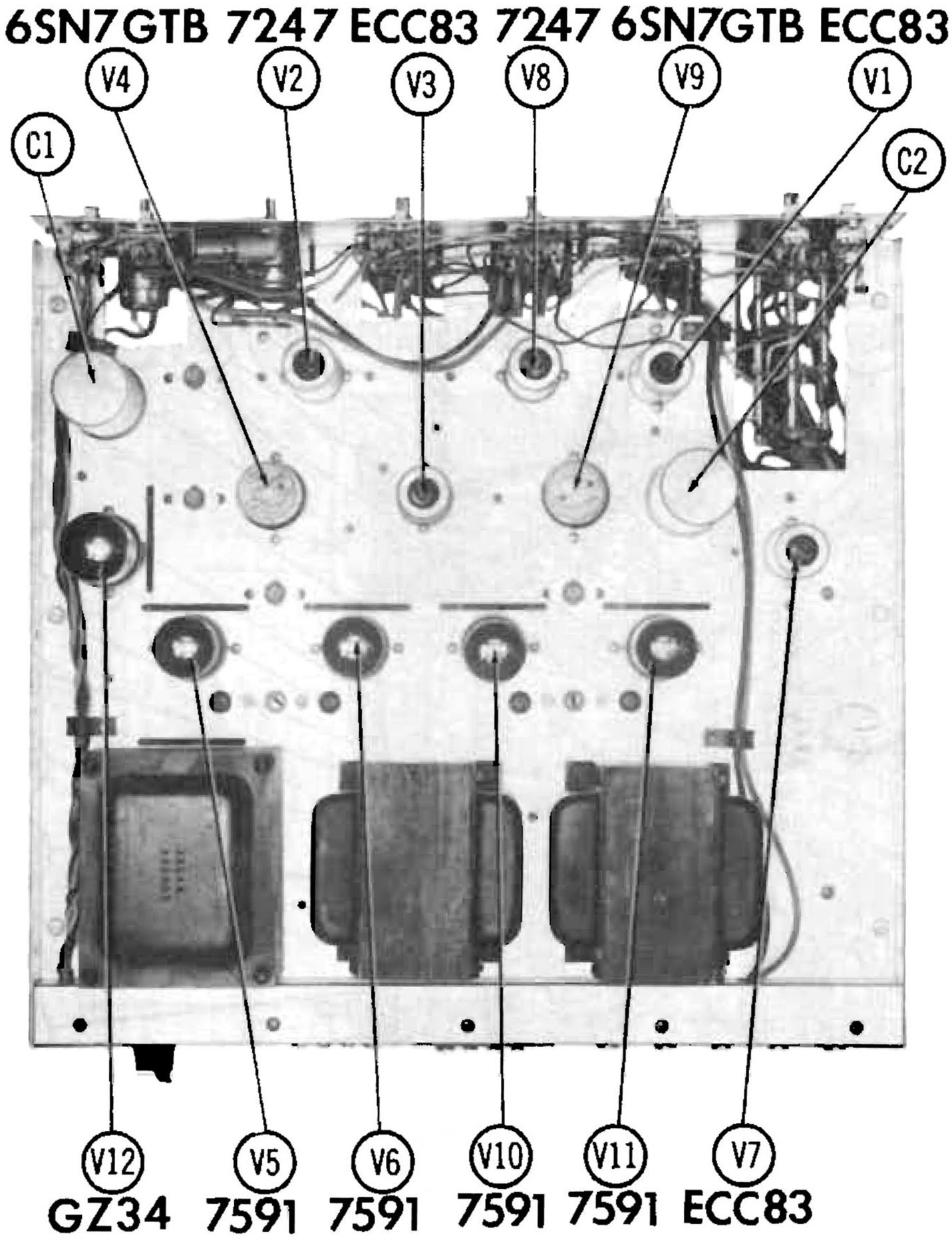


## ADJUSTMENTS

BALANCE AND BIAS ADJUSTMENT

Set both Output Balance controls (R5, R6) and both Bias controls to the center of their ranges. Connect speakers or suitable load. Turn on amplifier and set Level control to minimum.

Connect leads of VTVM (3VDC range or lower) to the pair of meter jacks for channel 1. (Leads may need to be reversed). Adjust Balance control (R5) for zero, or minimum. Remove VTVM and connect to the pair of meter jacks for channel 2. Adjust Output Balance (R6) for zero, or minimum.

Connect the DC probe of VTVM (3VDC range or lower) to either meter jack of the pair for channel 1, common lead to chassis. Adjust Bias (R7) for .38V. Remove DC probe and connect to either meter jack of the pair for channel 2. Adjust Bias R8 for .38V.

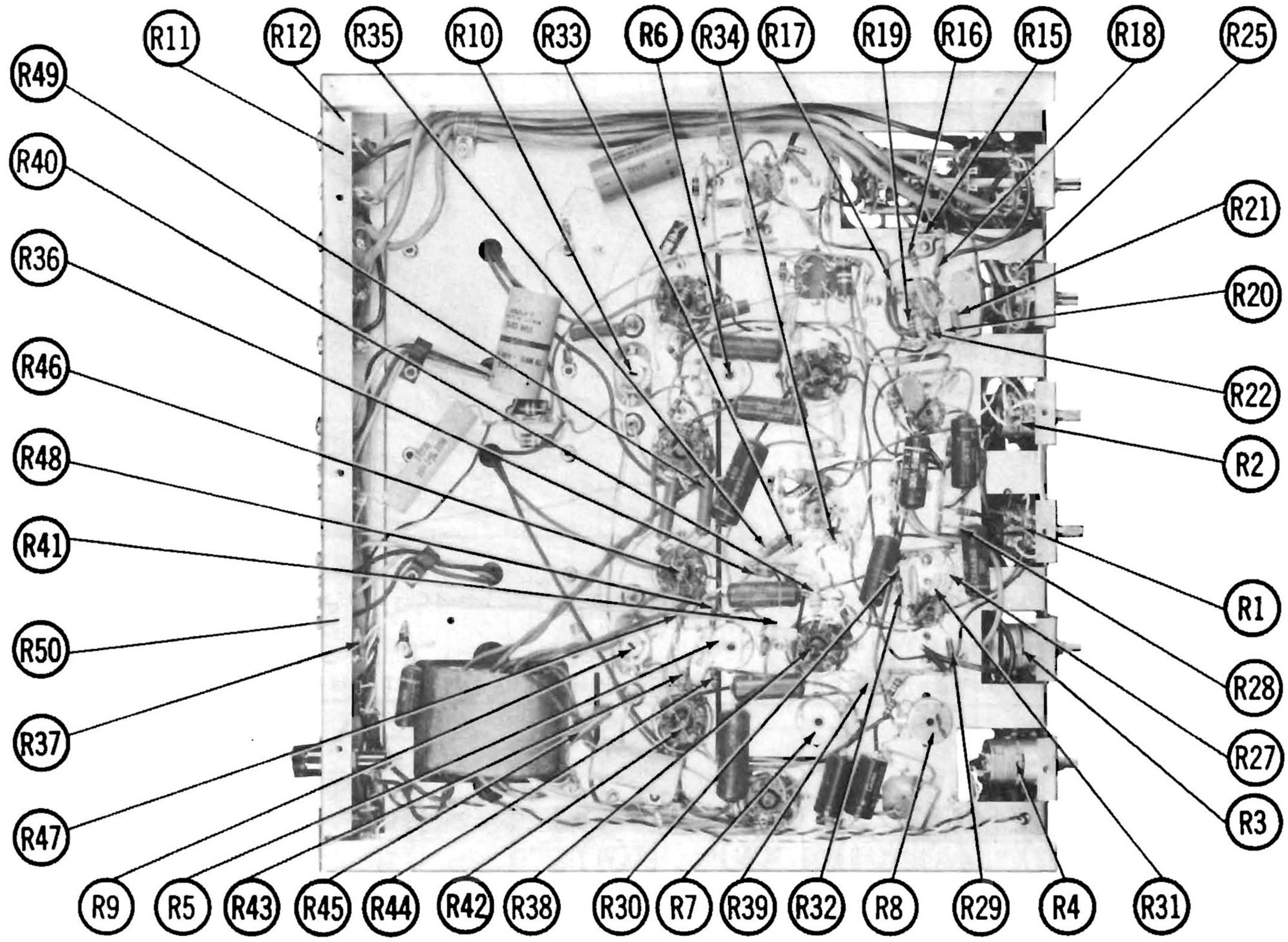


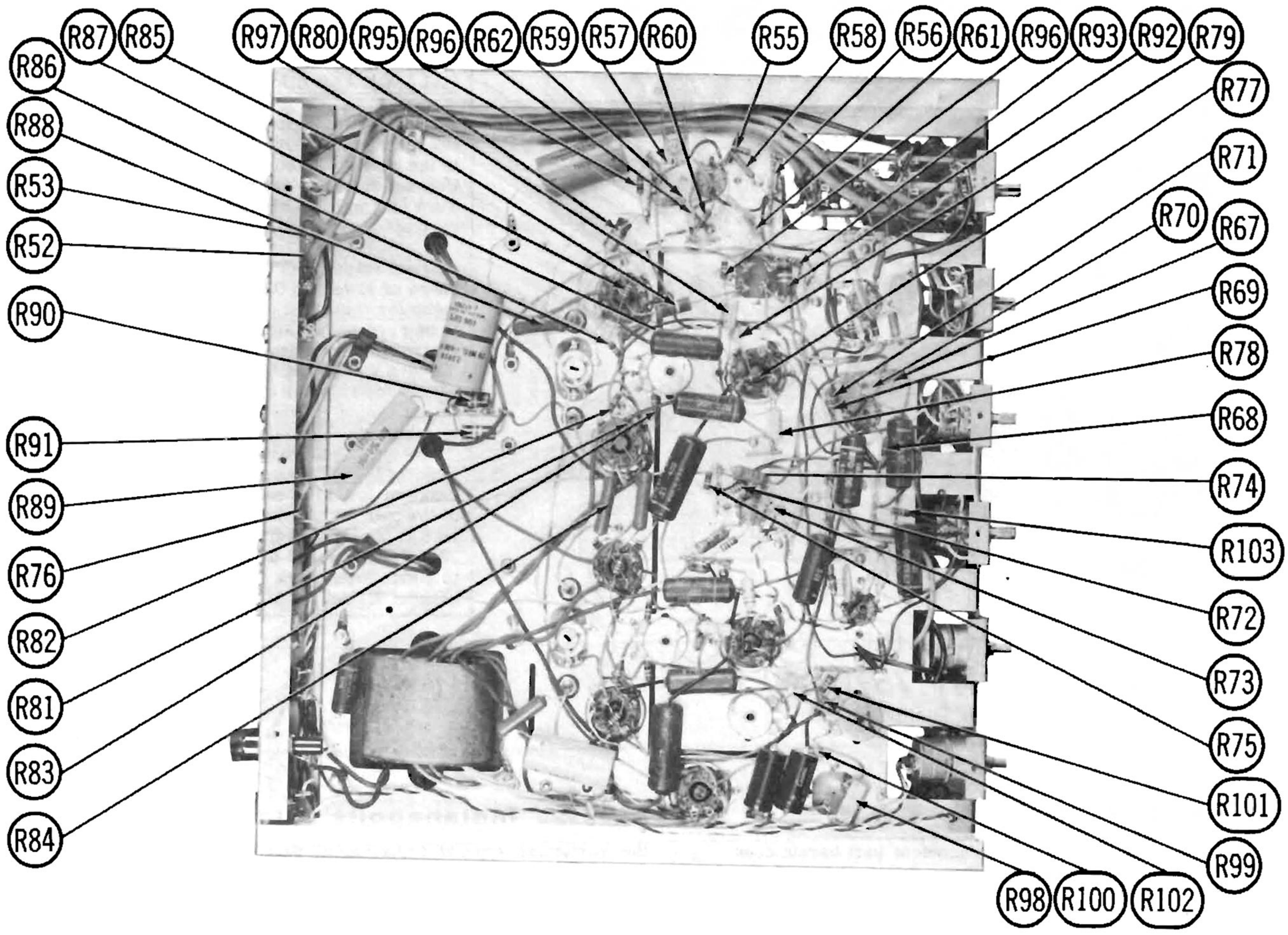


CHASSIS BOTTOM VIEW-RESISTOR IDENT.

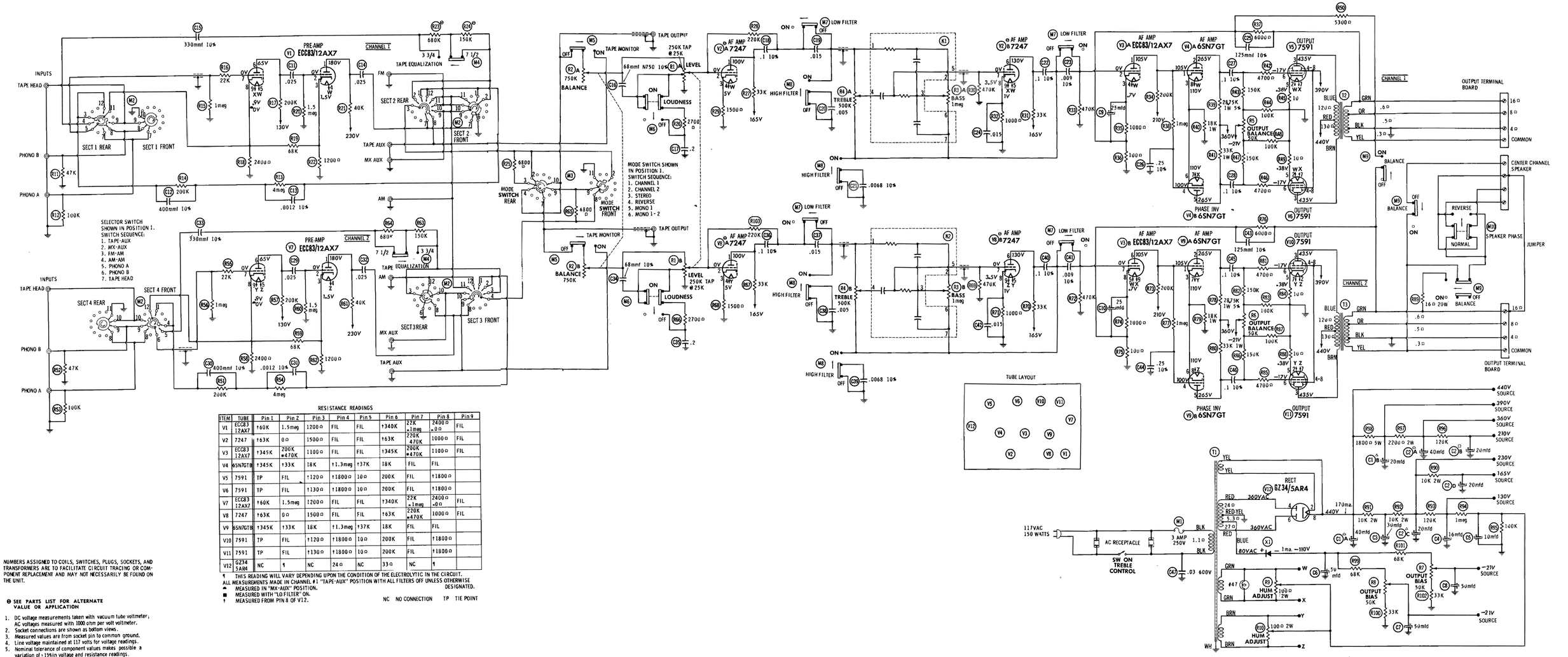


RESISTANCE READINGS

| ITEM | TUBE | Pin 1 | Pin 2 | Pin 3 | Pin 4 | Pin 5 | Pin 6 | Pin 7 | Pin 8 | Pin 9 |
|---|---|---|---|---|---|---|---|---|---|---|
| V1 | ECC83 12AX7 | †60K | 1.5meg | 1200Ω | FIL | FIL | †340K | 22K +1meg | 2400Ω +0Ω | FIL |
| V2 | 7247 | †63K | 0Ω | 1500Ω | FIL | FIL | †63K | 220K 470K | 1000Ω | FIL |
| V3 | ECC83 12AX7 | †345K | 200K +470K | 1100Ω | FIL | FIL | †345K | 200K +470K | 1100Ω | FIL |
| V4 | 6SN7GTB | †345K | †33K | 18K | †1.3meg | †37K | 18K | FIL | FIL | |
| V5 | 7591 | TP | FIL | †120Ω | †1800Ω | 10Ω | 200K | FIL | †1800Ω | |
| V6 | 7591 | TP | FIL | †130Ω | †1800Ω | 10Ω | 200K | FIL | †1800Ω | |
| V7 | ECC83 12AX7 | †60K | 1.5meg | 1200Ω | FIL | FIL | †340K | 22K +1meg | 2400Ω +0Ω | FIL |
| V8 | 7247 | †63K | 0Ω | 1500Ω | FIL | FIL | †63K | 220K +470K | 1000Ω | FIL |
| V9 | 6SN7GTB | †345K | †33K | 18K | †1.3meg | †37K | 18K | FIL | FIL | |
| V10 | 7591 | TP | FIL | †120Ω | †1800Ω | 10Ω | 200K | FIL | †1800Ω | |
| V11 | 7591 | TP | FIL | †130Ω | †1800Ω | 10Ω | 200K | FIL | †1800Ω | |
| V12 | GZ34 5AR4 | NC | ¶ | NC | 24Ω | NC | 33Ω | NC | ¶ | |

¶ THIS READING WILL VARY DEPENDING UPON THE CONDITION OF THE ELECTROLYTIC IN THE CIRCUIT.
ALL MEASUREMENTS MADE IN CHANNEL #1 "TAPE-AUX" POSITION WITH ALL FILTERS OFF UNLESS OTHERWISE DESIGNATED.
☂ MEASURED IN "MX-AUX" POSITION.
■ MEASURED WITH "LO FILTER" ON.
† MEASURED FROM PIN 8 OF V12.

NC NO CONNECTION TP TIE POINT

NUMBERS ASSIGNED TO COILS, SWITCHES, PLUGS, SOCKETS, AND TRANSFORMERS ARE TO FACILITATE CIRCUIT TRACING OR COMPONENT REPLACEMENT AND MAY NOT NECESSARILY BE FOUND ON THE UNIT.

⊖ SEE PARTS LIST FOR ALTERNATE VALUE OR APPLICATION

1. DC voltage measurements taken with vacuum tube voltmeter; AC voltages measured with 1000 ohm per volt voltmeter.
2. Socket connections are shown as bottom views.
3. Measured values are from socket pin to common ground.
4. Line voltage maintained at 117 volts for voltage readings.
5. Nominal tolerance of component values makes possible a variation of ±15% in voltage and resistance readings.
6. All controls at minimum, proper output load connected.

**EICO MODEL ST-70**

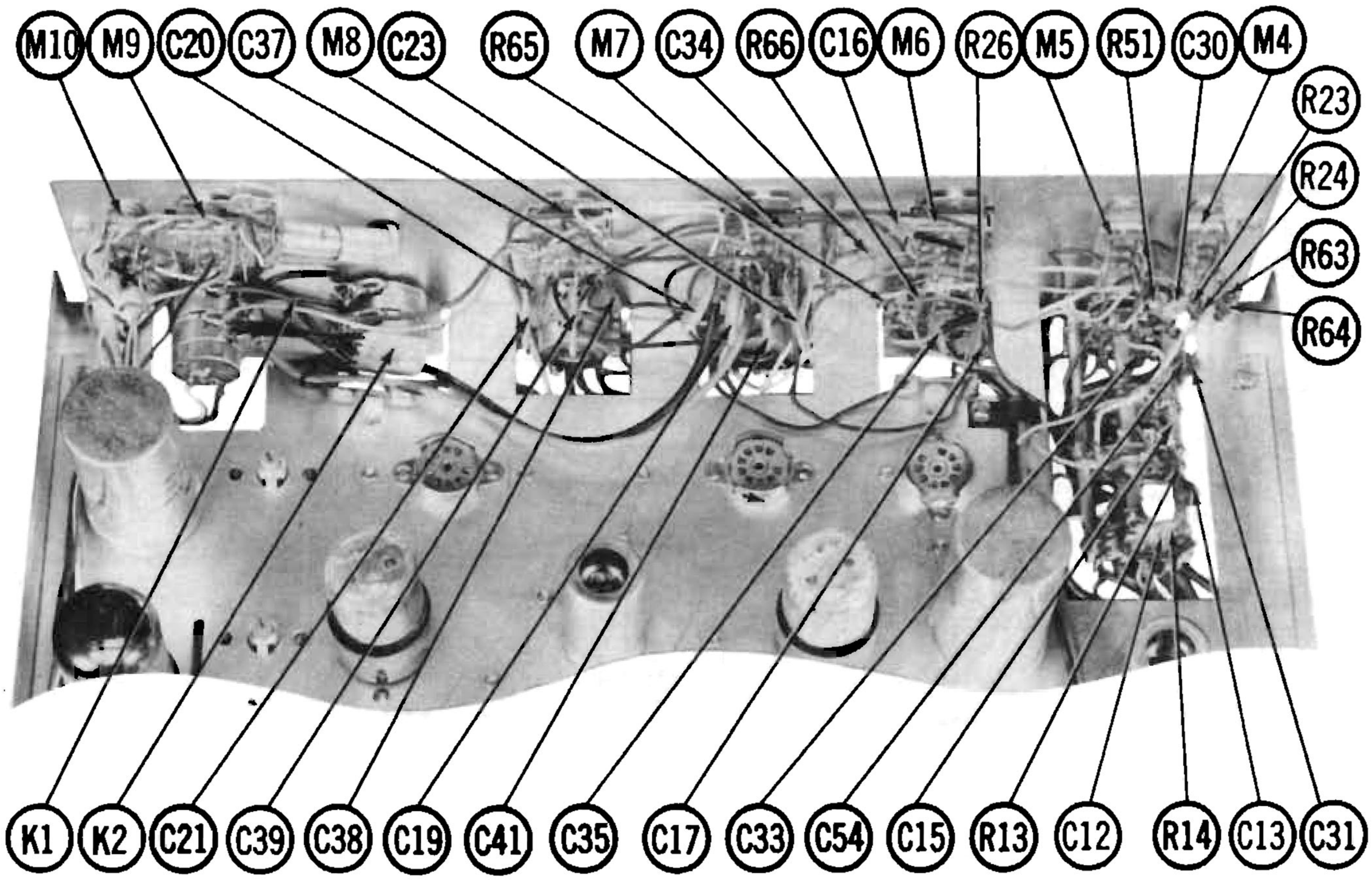


CONTROL PANEL-REAR VIEW

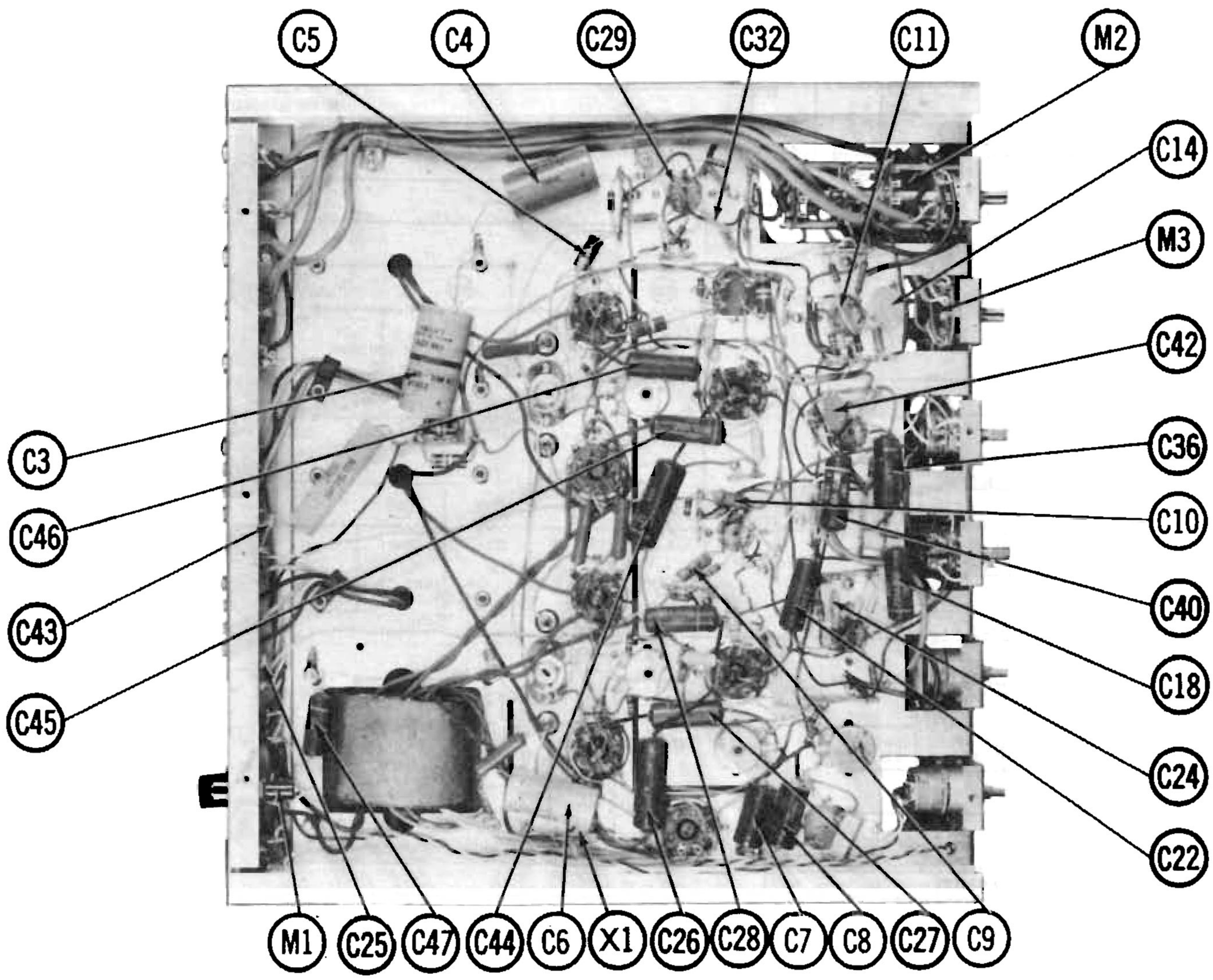


CHASSIS BOTTOM VIEW-CAPACITOR & MISC. IDENT.

# PARTS LIST AND DESCRIPTIONS

## TUBES

| ITEM No. | USE | TYPE |
|---|---|---|
| V1 | Channel 1 Preamp. | ECC83/12AX7 |
| V2 | Channel 1 AF Amp. | 7247 (12DW7)* |
| V3 | Channel 1 AF Amp. - Ch. 2 AF Amp. | ECC83/12AX7 |
| V4 | Channel 1 Phase Inv. | 6SN7GTB |
| V5 | Channel 1 Output | 7591 |
| V6 | Channel 1 Output | 7591 |
| V7 | Channel 2 Preamp. | ECC83/12AX7 |
| V8 | Channel 2 AF Amp. | 7247 (12DW7)* |
| V9 | Channel 2 Phase Inv. | 6SN7GTB |
| V10 | Channel 2 Output | 7591 |
| V11 | Channel 2 Output | 7591 |
| V12 | Rectifier | GZ34/5AR4 |

* Alternate

## POWER RECTIFIERS & SIGNAL DIODES

| ITEM No. | CURRENT RATING (Measured) | ORIGINAL Part or Type No. | RECTIFIERS | | DIODES | | NOTES |
|---|---|---|---|---|---|---|---|
| | | | RCA PART No. | SARKES TARZIAN PART No. | GENERAL ELECTRIC PART No. | RAYTHEON PART No. | |
| X1 | .001A | 93005 | 1N1763 | 20H | | | Bias Rectifier |

## ELECTROLYTIC CAPACITORS

| ITEM No. | RATING CAP. | RATING VOLT. | EICO PART No. | AEROVOX PART No. | CORNELL-DUBILIER PART No. | GENERAL ELECTRIC PART No. | MALLORY PART No. | PYRAMID PART No. | SPRAGUE PART No. |
|---|---|---|---|---|---|---|---|---|---|
| C1A | ▲40 | 500 | 24008 | AFH2-71-90 | B0510 | | FP399.5 | TMD-2770 | TVL-2939 |
| B | ▲20 | 500 | | | | | | | |
| C2A | ▲40 | 450 | 24012 | AFH4-15-30 | C0270 | XC4-51 | FP444.95 | TMT-3724 | TVL-4769.4 |
| B | ■20 | 450 | | | BR4045 | | | TD-40-450 | |
| C | ▲20 | 450 | | | | | | | |
| D | 20 | 450 | | | | | | | |
| C3 | 30 | 400 | 23016 ① | PRS1740 | BR3045 | QT1-12 | TC77 | TD-30-450 | TVA-1711 |
| C4 | 16 | 350 | 23003 | PRS1640 | BR1635 | QT1-8 | TC64 | TD-16-350 | TVA-1607 |
| C5 | 10 | 25 | 23001 | PTT79 | NLW10-25 | MT1-5 | TC22 | MLV10-25 | TE-1204 |
| C6 | 50 | 150 | 23015 | PRS1480 | BR5015 | QT1-17 | TC49 | TD-50-150 | TVA-1414 |
| C7 | 50 | 50 | 23011 | PRS1350 | BR5015 | QT1-15 | TC39 | TD-50-50 | TVA-1308 |
| C8 | 50 | 50 | 23011 | PRS1350 | BR5015 | QT1-15 | TC39 | TD-50-50 | TVA-1308 |
| C9 | 25 | 6 | 23020 | PTT26 | NLW25-10 | MT1-10 | TC26 | MLV25-6 | TE-1091 |
| C10 | 25 | 6 | 23020 | PTT26 | NLW25-10 | MT1-10 | TC26 | MLV25-6 | TE-1091 |

① Some versions may use Part #23041 in this application.

## FIXED CAPACITORS

| ITEM No. | RATING | REMARKS | AEROVOX PART No. | CENTRALAB PART No. | CORNELL-DUBILIER PART No. | ELMENCO PART No. | MALLORY PART No. | SPRAGUE PART No. |
|---|---|---|---|---|---|---|---|---|
| C11 | .025 | #22517 | | | | | | 5HK-S25 |
| C12 | 400 10% | | DI-390 | DD-401 | | CCD-401 | GP340 | 10TS-T40 |
| C13 | .0012 10% | | DI-1200 | DD-122 | | CCD-122 | GP212 | 10TS-D12 |
| C14 | .025 | #22517 | | | | | | 5HK-S25 |
| C15 | 330 10% | | DI-330 | DD-331 | L10T33 | CCD-331 | GP333 | 10TS-T33 |
| C16 | 68 N750 10% | | N750-DI 68 | DTN-68 | C10Q68U | CCTN-680 | CN7-468 | 10TCS-Q68 |
| C17 | .2 10V | #22580 | | UK10-204 | | | | |
| C18 | .1 400V 10% | | V84C4P1 | | PM4P1 | 4DP-3-104 | GEM-1001 | 4TM-P10 |
| C19 | .015 | | BPD-015 | DD-153 | BYA10S15 | CCD-153 | GP115 | 5HK-S15 |
| C20 | .005 | | BPD-005 | DD-502 | BYA10D5 | CCD-502 | GP250 | 5HK-D50 |
| C21 | .0068 10% | | DI-6800 | | | CCD-682 | | 10TS-D68 |
| C22 | .1 400V 10% | | V84C4P1 | | PM4P1 | 4DP-3-104 | GEM-1001 | 4TM-P10 |
| C23 | .009 10% | #22548 | | | | | | |
| C24 | .015 | | BPD-015 | DD-153 | BYA10S15 | CCD-153 | GP115 | 5HK-S15 |
| C25 | 125 10% | | DI-120 | DD-121 | L10T12 | CCD-121 | GP312 | 10TS-T12 |

## FIXED CAPACITORS (cont)

| ITEM No. | RATING | REMARKS | AEROVOX PART No. | CENTRALAB PART No. | CORNELL-DUBILIER PART No. | ELMENCO PART No. | MALLORY PART No. | SPRAGUE PART No. |
|---|---|---|---|---|---|---|---|---|
| C26 | .25 400V 10% | | | | PM4P25 | 4DP-5-254 | GEM-4025 | 4TM-P25 |
| C27 | .1 400V 10% | | V84C4P1 | | PM4P1 | 4DP-3-104 | GEM-1001 | 4TM-P10 |
| C28 | .1 400V 10% | | V84C4P1 | | PM4P1 | 4DP-3-104 | GEM-1001 | 4TM-P10 |
| C29 | .025 | #22517 | | | | | | 5HK-S25 |
| C30 | 400 10% | | DI-390 | DD-401 | | CCD-401 | GP340 | 10TS-T40 |
| C31 | .0012 10% | | DI-1200 | DD-122 | | CCD-122 | GP212 | 10TS-D12 |
| C32 | .025 | #22517 | | | | | | 5HK-S25 |
| C33 | 330 10% | | DI-330 | DD-331 | L10T33 | CCD-331 | GP333 | 10TS-T33 |
| C34 | 68 10% | | N750-DI 68 | DTN-68 | C10Q68U | CCTN-680 | CN7-468 | 10TCS-Q68 |
| C35 | .2 10V | #22580 | | UK10-204 | | | | |
| C36 | .1 400V 10% | | V84C4P1 | | PM4P1 | 4DP-3-104 | GEM-1001 | 4TM-P10 |
| C37 | .015 | | BPD-015 | DD-153 | BYA10D15 | CCD-153 | GP115 | 5HK-S15 |
| C38 | .005 | | BPD-005 | DD-502 | BYA10D5 | CCD-502 | GP250 | 5HK-D50 |
| C39 | .0068 10% | | DI-6800 | | | CCD-682 | | 10TS-D68 |
| C40 | .1 400V 10% | | V84C4P1 | | PM4P1 | 4DP-3-104 | GEM-1001 | 4TM-P10 |
| C41 | .009 10% | #22548 | | | | | | |
| C42 | .015 | | BPD-015 | DD-153 | BYA10S15 | CCD-153 | GP115 | 5HK-S15 |
| C43 | 125 10% | | DI-120 | DD-121 | L10T12 | CCD-121 | GP312 | 10TS-T12 |
| C44 | .25 400V 10% | | | | PM4P25 | 4DP-5-224 | GEM-4025 | 4TM-P25 |
| C45 | .1 400V 10% | | V84C4P1 | | PM4P1 | 4DP-3-104 | GEM-1001 | 4TM-P10 |
| C46 | .1 400V 10% | | V84C4P1 | | PM4P1 | 4DP-3-104 | GEM-1001 | 4TM-P10 |
| C47 | .03 600V | | P688N-03 | DD-303 | CUB6S3 | 6DP-3-303 | GEM-613 | 6TM-S30 |

\# Eico Part Number.

## CONTROLS

All wattages 1/2 watt, or less, unless otherwise listed.

| ITEM No. | USE | RESISTANCE | EICO PART No. | CENTRALAB PART No. | CLAROSTAT PART No. | CTS-IRC PART No. | MALLORY PART No. |
|---|---|---|---|---|---|---|---|
| R1A | Level, Channel 1 | 250K 25K Tap | 18069 | | | | |
| B | Level, Channel 2 | 250K 25K Tap | | | | | |
| R2A | Balance, Channel 1 | 750K | 18068 | B-744, SR-68 | | | FA16A, RU16R, CS3500 |
| B | Balance, Channel 2 | 750K | | | | | |
| R3A | Bass, Channel 1 | 1meg | 18071 | F1-51, R2-51 | | † QJ-1561R | ■ UE4139 |
| B | Bass, Channel 2 | 1meg | | | | | |
| R4A | Treble, Channel 1 | 500K | 18070 | F1-40, R2-40, KR-1 | | ‡ QJ-1560R | ▲ UE4283-5 |
| B | Treble, Channel 2 (Power Off-On) | 500K | | | | | |
| R5 | Output Balance, Ch. 1 | 50K | 18029 | BX-31 | B47-50K-S | Q11-123 | PTA54L |
| R6 | Output Balance, Ch. 2 | 50K | 18029 | BX-31 | B47-50K-S | Q11-123 | PTA54L |
| R7 | Output Bias, Ch. 1 | 50K | 18029 | BX-31 | B47-50K-S | Q11-123 | PTA54L |
| R8 | Output Bias, Ch. 2 | 50K | 18029 | BX-31 | B47-50K-S | Q11-123 | PTA54L |
| R9 | Hum Adj., Channel 1 | 100Ω 2W | 19016 | WN-101 | A43-100, FKS-1/4 | W11-084, SK1 | R100L |
| R10 | Hum Adj., Channel 2 | 100Ω 2W | 19016 | WN-101 | A43-100, FKS-1/4 | W11-084, SK1 | R100L |

† "CONCENTRIKIT" Equivalent: K-15 Kit with Base Elements and Shafts:
(Not available as a factory assembled unit).
B11-137, P14-016 (Panel)
B11-137, R1-024 (Rear)

‡ "CONCENTRIKIT" Equivalent: K-15 Kit with Base Elements and Shafts:
(Not available as a factory assembled unit)
B11-133, P14-016 (Panel)
B11-133, R1-024 (Rear)
76-1 (Switch)

■ "STA-LOC" Equivalent: FA16L, RU16L, OS562, IS875

▲ "STA-LOC" Equivalent: FA55L, RU55L, OS500, IS875, US41

# PARTS LIST AND DESCRIPTIONS (Continued)

## RESISTORS

All wattages 1/2 watt, or less, unless otherwise listed.

| ITEM No. | RATING | REPLACEMENT DATA | | |
|---|---|---|---|---|
| | | IRC PART No. | WORKMAN PART No. | REMARKS |
| R11 | 47K | | | |
| R12 | 100K | | | |
| R13 | 4meg | | | |
| R14 | 200K | | | |
| R15 | 1meg | | | |
| R16 | 22K | | | |
| R17 | 200K | | | |
| R18 | 2400Ω | | | |
| R19 | 68K | | | |
| R20 | 1.5meg | | | |
| R21 | 40K | | | |
| R22 | 1200Ω | | | |
| R23 | 680K | | | Note 1 |
| R24 | 150K | | | Note 1 |
| R25 | 6800Ω | | | |
| R26 | 2700Ω | | | |
| R27 | 33K | | | |
| R28 | 220K | | | |
| R29 | 1500Ω | | | |
| R30 | 470K | | | |
| R31 | 33K | | | |
| R32 | 1000Ω | | | |
| R33 | 470K | | | |
| R34 | 200K | | | |
| R35 | 1000Ω | | | |
| R36 | 100Ω | | | |
| R37 | 6000Ω | | | |
| R38 | 1meg | | | |
| R39 | 28750Ω 5% 1W | | | Pt. #11601 |
| R40 | 18K 1W | | | |
| R41 | 33K 1W | | | |
| R42 | 4700Ω | | | |
| R43 | 150K | | | |
| R44 | 100K | | | |
| R45 | 10Ω | | | |
| R46 | 4700Ω | | | |
| R47 | 150K | | | |
| R48 | 100K | | | |
| R49 | 10Ω | | | |
| R50 | 5300Ω | | | |
| R51 | 200K | | | |
| R52 | 47K | | | |
| R53 | 100K | | | |
| R54 | 4meg | | | |
| R55 | 22K | | | |
| R56 | 1meg | | | |
| R57 | 200K | | | |

| ITEM No. | RATING | REPLACEMENT DATA | | |
|---|---|---|---|---|
| | | IRC PART No. | WORKMAN PART No. | REMARKS |
| R58 | 2400Ω | | | |
| R59 | 68K | | | |
| R60 | 1.5meg | | | |
| R61 | 40K | | | |
| R62 | 1200Ω | | | |
| R63 | 150K | | | |
| R64 | 680K | | | |
| R65 | 6800Ω | | | |
| R66 | 2700Ω | | | |
| R67 | 33K | | | |
| R68 | 1500Ω | | | |
| R69 | 470K | | | |
| R70 | 33K | | | |
| R71 | 1000Ω | | | |
| R72 | 470K | | | |
| R73 | 200K | | | |
| R74 | 1000Ω | | | |
| R75 | 100Ω | | | |
| R76 | 6000Ω | | | |
| R77 | 1meg | | | |
| R78 | 28750 1W 5% | | | Pt. #11601 |
| R79 | 18K 1W | | | |
| R80 | 33K 1W | | | |
| R81 | 4700Ω | | | |
| R82 | 150K | | | |
| R83 | 100K | | | |
| R84 | 10Ω | | | |
| R85 | 4700Ω | | | |
| R86 | 150K | | | |
| R87 | 100K | | | |
| R88 | 10Ω | | | |
| R89 | 16Ω 20W | PW20-16 | 20W-SQ-16Ω | |
| R90 | 10K 2W | | | |
| R91 | 10K 2W | | | |
| R92 | 10K 2W | | | |
| R93 | 120K | | | |
| R94 | 1meg | | | |
| R95 | 100K | | | |
| R96 | 120K | | | |
| R97 | 2200Ω 2W | | | |
| R98 | 1800Ω 5W | PW5-1800 | 5W-SQ-1800 | |
| R99 | 68K | | | |
| R100 | 33K | | | |
| R101 | 68K | | | |
| R102 | 33K | | | |
| R103 | 220K | | | |

Note 1. Values reversed in some versions.

## TRANSFORMER (POWER)

| ITEM No. | RATING | | | REPLACEMENT DATA | | | | | NOTES |
|---|---|---|---|---|---|---|---|---|---|
| | PRI. | SEC. 1 | SEC. 2 | EICO PART No. | Merit PART No. | Stancor PART No. | Thordarson PART No. | Triad PART No. | |
| T1 | 117V ⓐ 1.4A | 720VCT ⓐ .170A Tap ⓐ 80V ⓐ .001A | 5V ⓐ 1.9A | 30048 | | | | | |
| | SEC. 3 | SEC. 4 | SEC. 5 | | | | | | |
| | 6.3V ⓐ 3.6A | 6.3V ⓐ 3.2A | | | | | | | |

## TRANSFORMER (AUDIO OUTPUT)

| ITEM No. | IMPEDANCE | | REPLACEMENT DATA | | | | | NOTES |
|---|---|---|---|---|---|---|---|---|
| | PRI. | SEC. | EICO PART No. | Merit PART No. | Stancor PART No. | Thordarson PART No. | Triad PART No. | |
| T2 | 6500Ω CT | 16Ω Tap ⓐ 8Ω, 4Ω | 32021 | | | | | |
| T3 | 6500Ω CT | 16Ω Tap ⓐ 8Ω, 4Ω | 32021 | | | | | |

## COMPONENT COMBINATIONS

| ITEM No. | USE | DESCRIPTION | EICO PART No. | REPLACEMENT DATA |
|---|---|---|---|---|
| K1 | Tone Comp. | | 29751 | |
| K2 | Tone Comp. | | 29751 | |

## FUSES

| ITEM No. | TYPE | RATING | REPLACEMENT DATA | | | | | |
|---|---|---|---|---|---|---|---|---|
| | | | EICO PART No. | | LITTELFUSE PART No. | | BUSS PART No. | |
| | | | FUSE | HOLDER | FUSE | HOLDER | FUSE | HOLDER |
| M1 | 3AG | 3A 250V | 91005 | 97800 | 313003 (3AG 3A 250V) | 342001 | AGC 3 | HKP |

## MISCELLANEOUS

| ITEM No. | PART NAME | EICO PART No. | NOTES |
|---|---|---|---|
| M2 | Switch | 60074 | Function (Rotary Wafer Type) |
| M3 | Switch | 60083 | Mode (Rotary Wafer Type) |
| M4 | Switch | 62012 | Tape Equal (DPDT Slide Type) |
| M5 | Switch | 62012 | Tape Monitor (DPDT Slide Type) |
| M6 | Switch | 62014 | Loudness (4PDT Slide Type) |
| M7 | Switch | 62014 | Lo Filter (4PDT Slide Type) |
| M8 | Switch | 62014 | Hi Filter (4PDT Slide Type) |
| M9 | Switch | 62014 | Balance Check (4PDT Slide Type) |
| M10 | Switch | 62012 | Phase (Speaker) (DPDT Slide Type) |

## CABINETS & CABINET PARTS

(When Ordering Cabinets & Cabinet Parts, Specify Model, Chassis & Color)

| NAME | PART NO. | DESCRIPTION |
|---|---|---|
| Jewel | 97717 | Pilot Light |
| Knob | 53049 | Level, Balance, Mode, Selector |
| Knob | 53048 | Outer, Bass, Treble |
| Knob | 53047 | Inner, Bass, Treble |
| Front Panel | 80091 | |

## WIRING DATA

General-use Unshielded Hook-up Wire ..... Use BELDEN No. 8530 (Solid) Available in 12 Colors
8524 (Stranded) Available in 12 Colors

Power Cord ..... Use BELDEN No. 17106 (Plastic) or 17126 (Rubber) - 6 Ft.
17109 (Plastic) or 17129 (Rubber) - 9 Ft.

Power Cord (Interlock Type) ..... Use BELDEN No. 8874 (Rubber) or 8895 (Plastic)