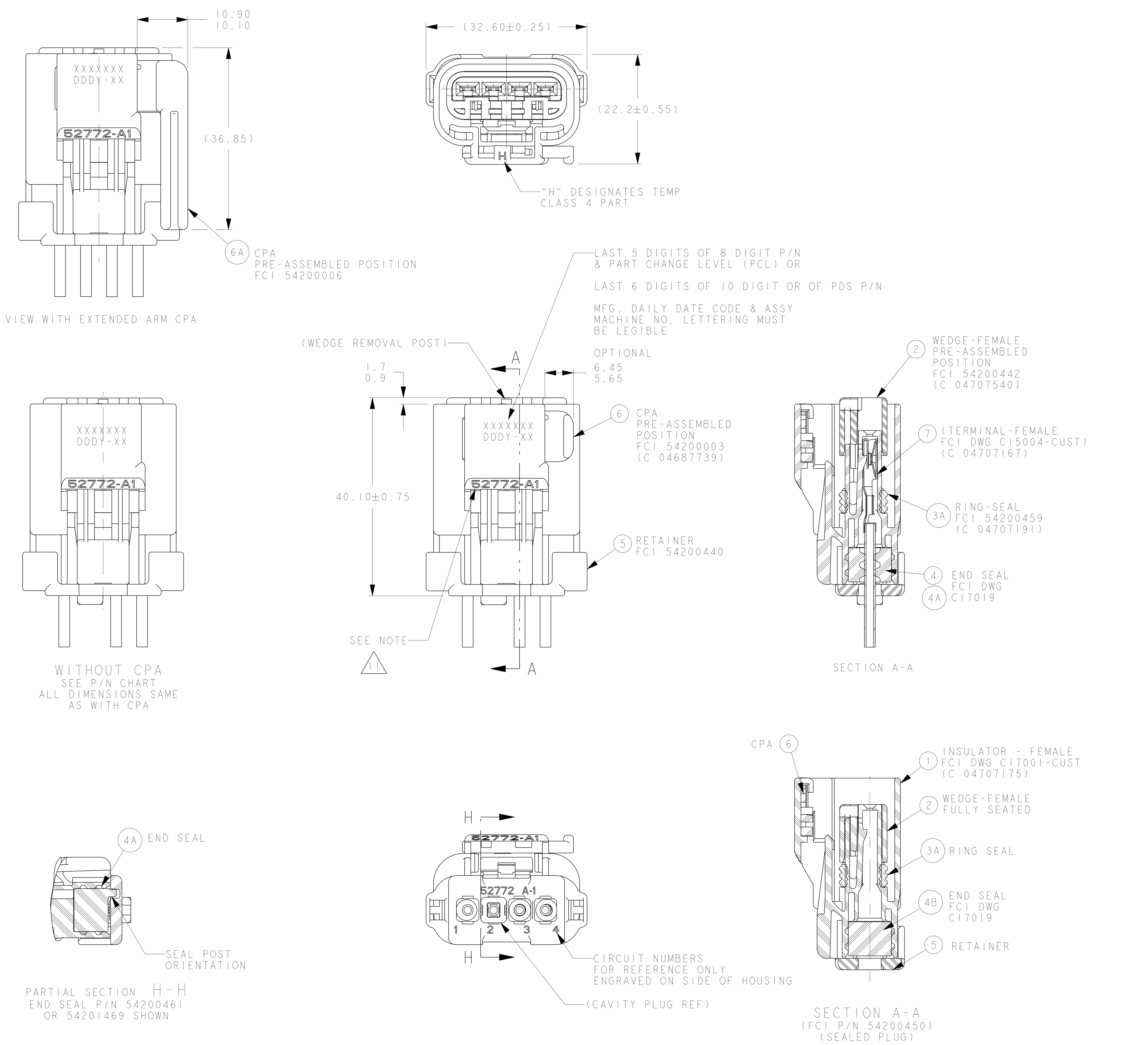

SEALED ASSEMBLY VIEWS
SEE P/N CHART
SHOWN WITH CPA'S

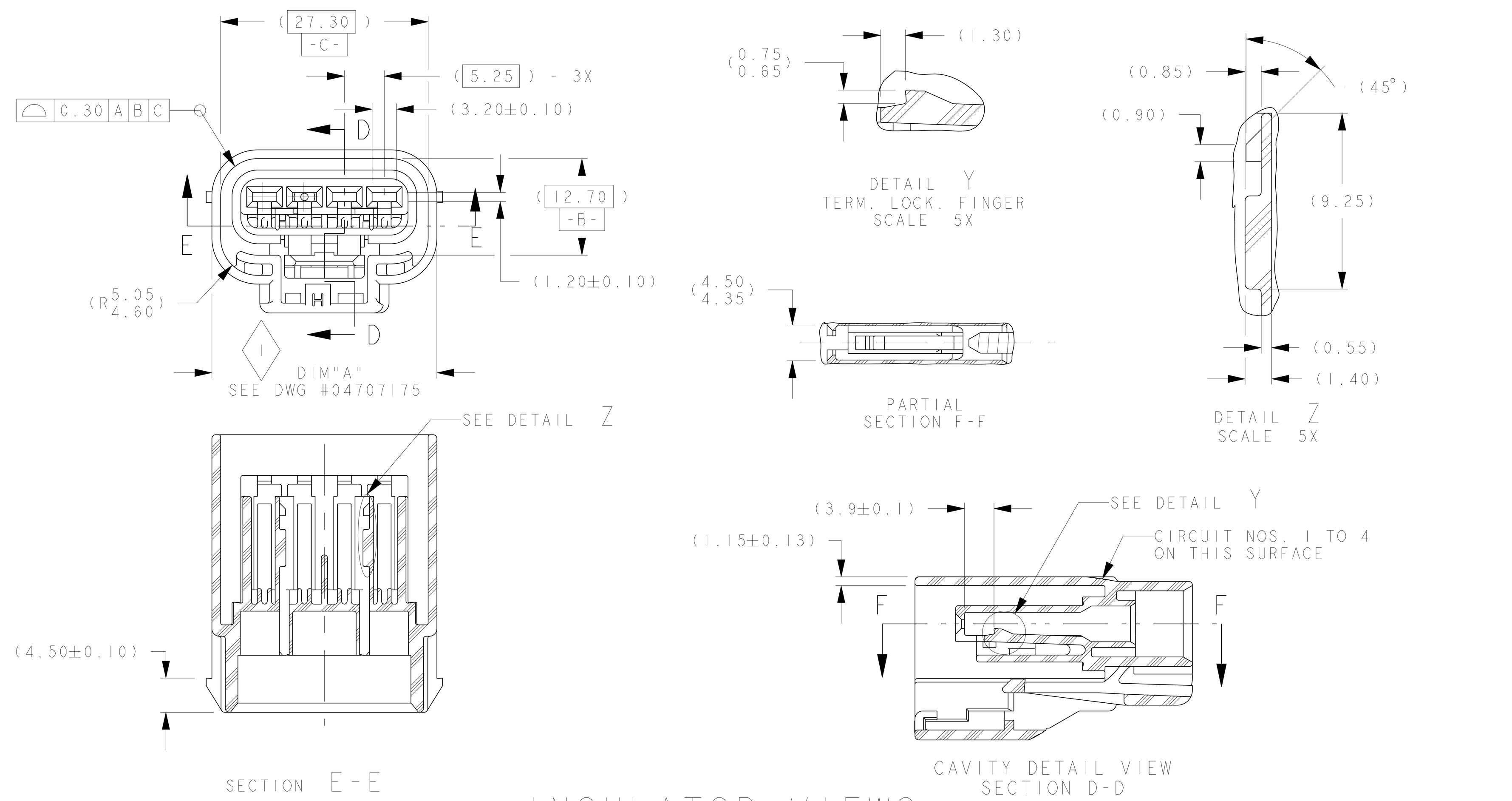

INSULATOR VIEWS
FOR REFERENCE ONLY

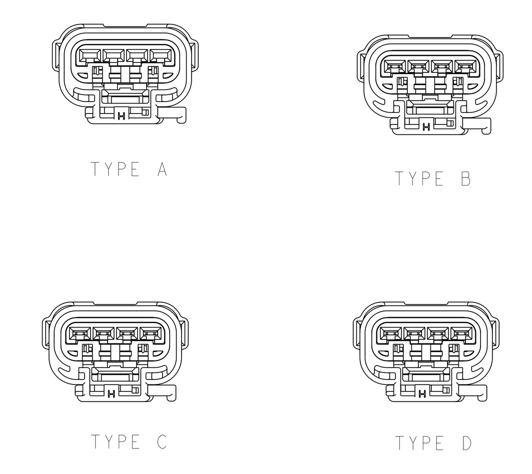

POLARIZATION OPTIONS
FULL SIZE
SHOWN W/CPA

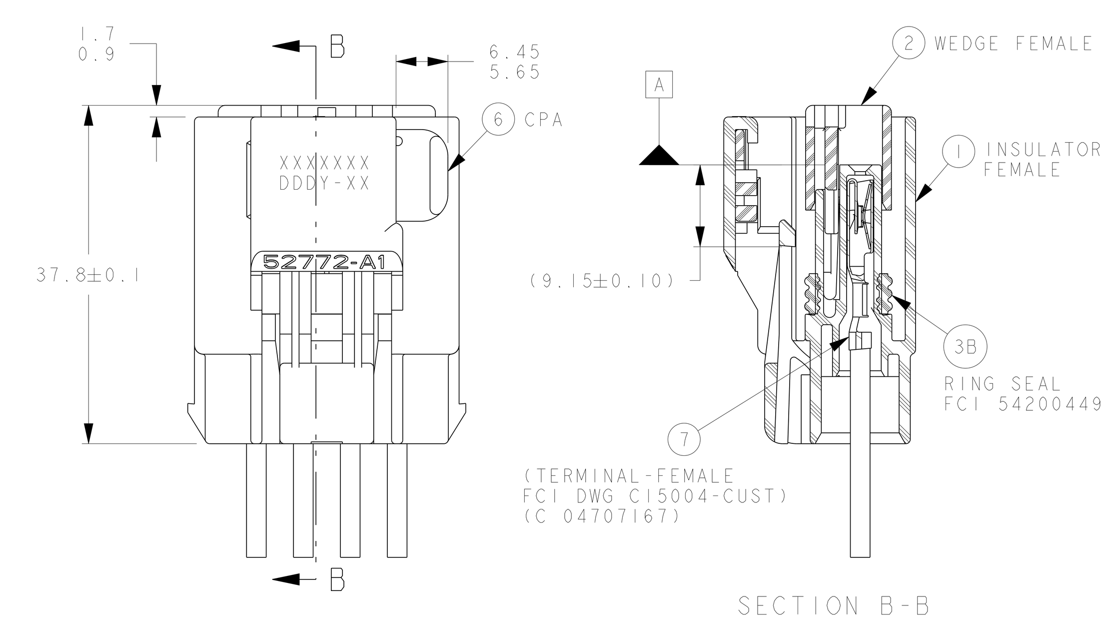

SEALED (PARTIAL) ASSEMBLY VIEW
SEE NOTE 7 SHIPPED WITHOUT END SEAL AND RETAINER

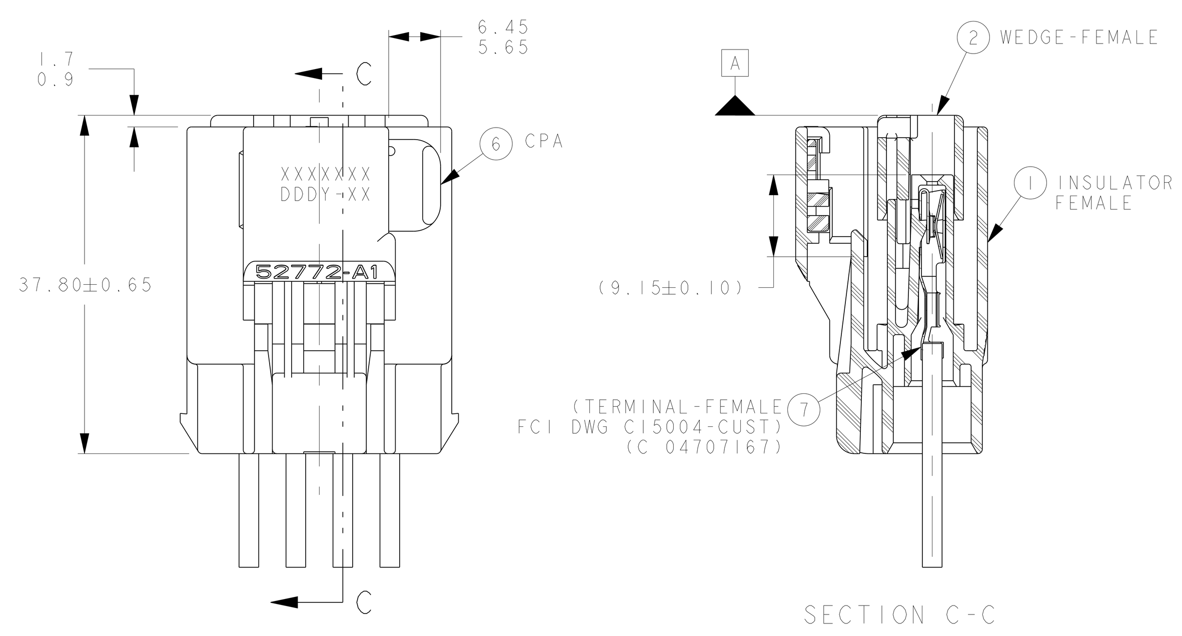

UNSEALED ASSEMBLY VIEW
SEE PART NUMBER CHART

NOTES:

1. QUALITY ASSURANCE REQUIREMENTS PER CHRYSLER PS-7300: 1 ◇ SPC DATA REQUIRED
2. ENGINEERING APPROVAL OF SUPPLIER SAMPLES IS REQUIRED PRIOR TO AUTHORIZATION OF PART PRODUCTION
3. CHANGES IN DESIGN COMPOSITION OR PROCESSING FROM THE PART PREVIOUSLY APPROVED FOR PART PRODUCTION REQUIRES PRIOR ENGINEERING APPROVAL
4. WIRING FABRICATORS MUST PURCHASE FROM SOURCES SHOWN
5. ALL THE SEALED CONNECTOR APPLICATIONS MUST BE USED WITH CHRYSLER WIRE SPEC. MS-8288 OR MS-9502 THIN WALL X-LINK 20, 18, 16, 14, 12 & 10 GAGE WIRES ONLY UNLESS OTHERWISE SPECIFIED SEE CHART (WIRE INSULATIONS Ø1.70 TO Ø4.09)
6. ALL NON-SEALED APPLICATIONS MAY BE USED WITH ANY WIRE INSULATION 22 GAGE THROUGH 10 GAGE (EXCEPT AS NOTED) PROVIDING THAT A TERMINAL GRIP FOR THAT CORE/INSULATION COMBINATION IS SHOWN ON THE FEMALE TERMINAL DRAWING

   MAX. INSULATION CRIMP WIDTH = 4.50
   MAX. INSULATION CRIMP HEIGHT= 4.50
   MAX. INSULATION DIA. =4.09 (10 GA THIN WALL)
7. MUST BE USED WITH FLUOROSILICONE END SEAL FCI P/N 54200430, RETAINER & PROPER GAGE TEFLON WIRES FOR METHANOL OR DIESEL FUEL APPLICATIONS
8. USE WITH CAVITY PLUG FCI P/N 54200005. WHEN REQ'D USE WITH 2.80MM APEX FEM. TERM. PER C15004-CUST SYMMETRICAL ABOUT CENTERLINE FOR 180° ORIENTATION
9. TEST METHOD PER SAE/USCAR-2 REV. 5, CONNECTOR ENGAGE & DISENGAGE WITH LATCH DEPRESSED FORCE NOT TO EXCEED 75N FOR THIS SYSTEM

   CPA SEATING FORCES - 40N MAXIMUM

   WEDGE SEATING FORCES - 100N MAXIMUM
10. SUPPLIER, MOLD & CAVITY I.D. MUST BE LEGIBLE
11. ANNUAL QUALITY REQUIREMENTS: IT IS PERMISSIBLE TO PERFORM CONTINUOUS CONFORMANCE PER FCI SPECIFICATION #AQA-001 INSTEAD OF ANNUAL LAYOUT & ANNUAL PV REQUIREMENTS OF QS-9000 SECTION 2 & PF-9600

    ALL NON-REFERENCE DIMENSIONS ARE REQUIRED

    - USE INDEX A, BLACK SEALED AND UNSEALED FOR ALL AFFECTED INSULATOR CAVITIES
    - CURRENT PRODUCTION TOOLING
    - POINT OF LAST RUN

    SERVICE TOOLING GUIDE INFORMATION PER APEX TRAINING MANUAL
12. MUST CONFORM TO THE FOLLOWING CHRYSLER/YNA STANDARDS:

    PF-9600 PERFORMANCE (CHRYSLER) EXCEPT AS NOTED ABOVE
    PS-7300 QUALITY ASSURANCE (CHRYSLER)
    PS-4480-CEK-4 (CHRYSLER) PART I.D. (G-009-2 YNA)
    PS-9065 REGRIND (CHRYSLER), (G-009-3 YNA)
    PS-9227 DATA EXCHANGE (CHRYSLER),(G-009-7 YNA)
    PS-10052 INFORMATION SECURITY (CHRYSLER)
13. THIS DRAWING (H59003) REPLACES CHRYSLER DRAWING NUMBER 04707254 LEVEL "R" CHRYSLER DRAWING IS FOR REFERENCE ONLY
14. FCI P/N WITH SUFFIX "N" DESIGNATES ASSEMBLIES W/O CPA
15. P/N'S WITH BURNT ORANGE END SEAL CAN BE USED WITH 12 OR 14 GAGE IN ANY COMBINATION OR ORDER OR WITH THREE 12 GAGE AND ONE 18 GAGE OR ONE 16 GAGE WIRE (ONE END)

MATING PART NUMBER CHART

INDEX TYPE	COLOR	SEALED/ UNSEALED	FEMALE ASSEMBLY PART NUMBERS: FCI	FEMALE ASSEMBLY PART NUMBERS: CUSTOMER	MATING ASSEMBLY PART NUMBER FOR REFERENCE ONLY: FCI	MATING ASSEMBLY PART NUMBER FOR REFERENCE ONLY: CUSTOMER
D	NATURAL	UNSEALED	54200404N	N/A	54200424,54200408	N/A
		UNSEALED	54200404	C 56038053	54200424,54200408	C 56042179,56038055
		SEALED	54200412N	N/A	54200416	N/A
		SEALED	54200412	C 04707264	54200416	C 04707380
	BLACK	SEALED	F915600	N/A	F225600	N/A
C	DK GREY	UNSEALED	54200403N	N/A	54200407	N/A
		UNSEALED	54200403	C 56038193	54200407	C 56038194
		SEALED	54200411N	N/A	54200415	N/A
		SEALED	54200411	C 04707263	54200415	C 04707379
		SEALED	55200428	N/A	54200429	N/A
	BLACK	SEALED	F815600	N/A	F125600	N/A
B	LT GREY	UNSEALED	54200402N	C 04688849	54200418,54200419 54200417,54200406	C 04495870,04661922 C 04707209, T.B.D.
		SEALED	54200450N	N/A	DIRECT CONNECT APPLICATION	
		SEALED	54200450	C 04707510	DIRECT CONNECT APPLICATION	
		SEALED	54200447N	C 04801217AA	54200417	C 04707209
		SEALED	54200422N	N/A	N/A	N/A
		SEALED	54200422	C 04759394AA	N/A	LH FUEL PUMP
		SEALED	54200410N	N/A	54200414,54200418 54200419,54200417	N/A
		SEALED	54200410	F 4L3T-14A464-AA	DIRECT CONNECT APPL.	F DU5T-14A594-AA
				C 04707256	54200414,54200418 54200419,54200417	C 04707267,04495870 C 04661922,04707209
		SEALED	54200495	N/A	F598500,F760600	N/A
		SEALED	54200480N	N/A	54200420/F598500	N/A
		SEALED	54200495	F AU5T-14A464-HAA	DIRECT CONNECT APPLICATION	
		SEALED	54200480	C 04759900AA	54200420/F598500	LOW PERM HDR
	BLACK	SEALED	F715600	N/A	F025600	N/A
A	BLACK	UNSEALED	54200400N	N/A	54200405	N/A
		UNSEALED	54200400	C 56038052	54200405	C 56038054
		UNSEALED	INDEX-A	INDEX-A	54200423	C 56042178
		SEALED	F851310	GM 13586744	DIRECT CONNECT INDEX-A	
		SEALED	F333900	GM 13580766	DIRECT CONNECT INDEX-A	
		SEALED	F030110	GM 13583477	DIRECT CONNECT INDEX-A	
		SEALED	54200467N	N/A	F860600/DIR CONNECT	N/A
		SEALED	54200467	C 04868299AA	F860600/DIR CONNECT	SOLID STATE RELAY
		SEALED	54200409N	N/A	54200413,54200426	N/A
		SEALED	54200409	C 04707262	54200413,54200426	C 04707266,04759236
		SEALED	F512310	N/A	54200413	N/A
		SEALED	54200421N	N/A	54200425	N/A
		SEALED	54200421	C 04759251	54200425	C 04759253
		SEALED	F398500	N/A	F498500	N/A
		SEALED	INDEX-A	INDEX-A	54200426,54200427 54200468	C 04759236, 56042441 C 04759236AB
		SEALED	55200445	N/A	55200446	N/A

CUSTOMER LEGENDS:
CHRYSLER - C
FORD - - F
GENERAL MOTORS - GM

ASSEMBLY PART NUMBER CHART

UNSEALED

	W/O CPA				W/CPA		
CUSTOMER P/N'S	X	X	X	C 04688849	C 56038052	C 56038193	C 56038053
FCI P/N'S	54200400N	54200403N	54200404N	54200402N	54200400	54200403	54200404
REQUIRED: item 1 (54200431)	1				1		
item 1 (54200435)				1			
item 1 (54200433)		1				1	
item 1 (54200434)			1				1
item 2	1	1	1	1	1	1	1
item 3A	X	X	X	X	X	X	X
item 3B	X	X	X	X	X	X	X
item 4 (54200428)	X	X	X	X	X	X	X
item 4 (54200429)	X	X	X	X	X	X	X
item 4A (54200461)	X	X	X	X	X	X	X
item 4A (54200469)	X	X	X	X	X	X	X
item 4B	X	X	X	X	X	X	X
item 5	X	X	X	X	X	X	X
item 6	X	X	X	X	1	1	1
item 6A	X	X	X	X	X	X	X
TEMPERATURE CLASS	3	3	3	3	3	3	3
PCL	U	U	U	U	U	U	U
WIRE GAGE	22 TO 10 SEE NOTES						

SEALED W/CPA

CUSTOMER P/N'S	C 04707510	C 04707262	C 04707256 / F 4L3T-14A464-AA	C 04707263	C 04707264	N/A	C 04759251	C 04759394AA	C 04868299AA	F AU5T-14A464-HAA	GM 13580766	GM 13586744	C 04759900AA	N/A	GM 13583477	C 04801217AA
FCI P/N'S	54200450	54200409	54200410	54200411	54200412	55200428	54200421	54200422	54200467	54200495	F333900	F851310	54200480	F398500	F030110	54200447N
REQUIRED: item 1 (54200431)		1					1		1		1	1		1	1	
item 1 (54200435)	1		1					1		1			1			1
item 1 (54200433)				1		1										
item 1 (54200434)					1											
item 2	1	1	1	1	1	1	1	1	1	1	1	1	1	1	1	1
item 3A	1	1	1	1	1	1	1	1	1	1	1	1	1	1	1	
item 3B																1
item 4 (54200428)		1	1	1	1											
item 4 (54200429)						1	1	1								
item 4A (54200461)									1	1	1	1			1	
item 4A (54200469)													1	1		
item 4B	1															
item 5	1	1	1	1	1	1	1	1	1	1	1	1	1	1	1	
item 6	1	1	1	1	1	1	1	1	1	1	1	X	1	1	X	X
item 6A	X	X	X	X	X	X	X	X	X	X	X	1	X	X	X	X
TEMPERATURE CLASS	3	3	3	3	3	3	3	3	3	3	3	3	3	3	3	3
PCL	U	U	U	U	U	U	U	U	U	V	X	AB	U	V	Y	U
WIRE GAGE CIR 1	PLUG	20,18,16 OR 14				SEE NOTE 15			20 / 14		12 / 10		12 / 10		12 / 10	SEE NOTE 7
WIRE GAGE CIR 2									20 / 14		12 / 10		18 / 14		12 / 10	
WIRE GAGE CIR 3									12 / 10		20 / 14		18 / 14		20 / 14	
WIRE GAGE CIR 4									12 / 10		20 / 14		12 / 10		20 / 14	
	PLUG	WIRE GAGE							SEE NOTE 18							

SEALED W/O CPA

CUSTOMER P/N'S	X	X	X	X	X	X	X	X	X	X
FCI P/N'S	54200450N	F512310	54200409N	54200410N	54200411N	54200412N	54200421N	54200422N	54200467N	54200480N
REQUIRED: item 1 (54200431)		1	1				1		1	
item 1 (54200435)	1			1				1		1
item 1 (54200433)					1					
item 1 (54200434)						1				
item 2	1	1	1	1	1	1	1	1	1	1
item 3A	1	1	1	1	1	1	1	1	1	1
item 3B										
item 4 (54200428)			1	1	1	1				
item 4 (54200429)							1	1		
item 4A (54200461)									1	
item 4A (54200469)										1
item 4B	1	1								
item 5	1	1	1	1	1	1	1	1	1	1
item 6	X	X	X	X	X	X	X	X	X	X
item 6A	X	X	X	X	X	X	X	X	X	X
TEMPERATURE CLASS	3	3	3	3	3	3	3	3	3	3
PCL	U	AB	U	U	U	U	U	U	U	U
WIRE GAGE	PLUG	SAME AS PARTS WITH CPA'S								

ITEM	CLASS 3 FCI P/N	CLASS 3 CUSTOMER P/N	CLASS 3 COLOR	PART NAME (MAT'L)	INDEX	CLASS 4 FCI P/N	CLASS 4 COLOR	REQUIRED 55200445	REQUIRED F715600	REQUIRED F815600	REQUIRED F915600
1	54200431	04707186	BLK	INSULATOR-FEMALE (PA66 GF)	A	55200442	BLACK	1			
1	54200435	04688853	LT GRY	INSULATOR-FEMALE (PA66 GF)	B	F325600	BLACK		1		
1	54200433	04707188	DK GRY	INSULATOR-FEMALE (PA66 GF)	C	F425600	BLACK			1	
1	54200434	04707189	NATURAL	INSULATOR-FEMALE (PA66 GF)	D	F525600	BLACK				1
2	54200442	04707540	AQUA	WEDGE-FEMALE;(PA66 GF)		55200443	NATURAL	1	1	1	1
3A	54200459	04707191	RED	RING SEAL;(SILICONE)		*55200444	DK BLU	1	1	1	1
3B	54200449 (WAS C17007)	N/A	GRN	RING SEAL;(FLUOROSILICONE)							
4	54200428	N/A	LT BLU	END SEAL;(SILICONE)		*55200439	DK BLU	1	1	1	1
4	54200429	N/A	BURNT ORG	END SEAL;(SILICONE)		X	X	X	X	X	X
4A	54200461	N/A	BRT RED	END SEAL;(SILICONE) HYBRID		X	X	X	X	X	X
4A	54200469	N/A	LT GRY	END SEAL;(SILICONE) HYBRID		X	X	X	X	X	X
4B	54200458	N/A	BRT YEL	END SEAL;(SILICONE)W/O HOLES		X	X	X	X	X	X
5	54200440	N/A	BLK	RETAINER;(PA66 GF)		55200438	NATURAL	1	1	1	1
6	54200003	04687739	RED	CPA LATCH;(PA66 GF)		54200008	NATURAL	1	1	1	1
6A	54200006	04707429	LT GRY	CPA WITH ARM EXTENSION		X	X	X	X	X	X
CONNECTOR ASSEMBLY TEMPERATURE CLASS PER SAE/USCAR-2 REV 5								4	4	4	4
PART CHANGE LEVEL (PCL)								W	W	W	W
								20 TO 14 WIRE GAUGE			

ASSEMBLY PART NOS. (SEALED): 55200445, F715600, F815600, F915600

CIR NO.: 1, 2, 3, 4

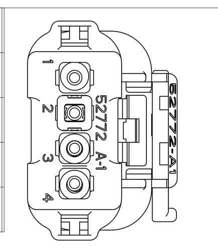

16. *SEALS BAKED AT 450°F FOR 5 HOURS DURING CONTINUOUSLY INTRODUCED FRESH AIR TO DRIVE OFF VOLITIES
17. FORD PART NUMBERS ARE LISTED FOR REFERENCE ARE PPAP'D TO FORD 4L3T-14A464-AA DRAWING
18. MUST USE WIRE SIZES AS SPECIFIED FOR CIRCUIT LOCATION SHOWN: FOR EXAMPLE 12 OR 10 AWG, 20 TO 14 OR 18 TO 14 AWG

FCI	52772 OR 52772 H	SEE CHART
VENDOR	VENDOR CODE	P/N

ECN-NO.	ZONE	CHANGE DESCRIPTION
12-00340	F16 R23	ADDED P/N F512310 FOR YAZAKI PLUG APPLICATION, P/N F851310 FOR GM 13586744 WITH EXTENDED ARM CPA AND ASSEMBLY VIEW
11-00313	E19 B14	MATERIAL PA66 GF WAS (NYLON) & PLAN VIEW ADDED FOR CIRCUIT LOCATIONS ADDED P/N DU5T-14A594-AA FOR FORD DELETE CAP PLUG APPLICATION POL TYPE B
11930	E16	REVISED AND REDRAWN IN PDS SEE REV X FOR PREVIOIUS CHANGES. P/N F030110 AND GM P/N 13583477 WITHOUT CPA ADDED

THIS DRAWING AND ALL OTHER INFORMATION CONTAINED THEREIN IS PROPRIETARY AND THE PROPERTY OF FCI.This drawing may not be copied, reproduced or disclosed to any third party without the expressed written permission of FCI.FCI April©1999

PRODUCT SPEC.: APEX 2.8 MM | PACKAGING SPEC.: - | APPLICATION SPEC.: -
TOLERANCES ±0.1 ±2°
COUNTERPART Nr.: G36004, H59012
MATERIAL: SEE CHART | SURFACE FINISH: -
COLOUR: SEE CHART | -
DO NOT MEASURE DRAWING | TOOL NO. A-047 | ECO Loc. Code AN
3RD ANGLE | DIMENSION IN MILLIMETERS | CAD SYSTEM pro / eng. | DWG SIZE A0

	DATE	NAME
CREATED BY	2005-05-25	RAJKUMAR
MODIFIED BY	2012/03/15	Sucha SIAN
CHECKED BY	2012/03/15	Frank HOLUB
APPROVED BY	2012/03/15	Jeff CAMPBELL

FILE NAME: H59003
TITLE: CHART- ASSEMBLY 4WAY FEMALE
PROJECT: 2.80MM APEX CONNECTOR SYSTEM
ESR NO. WT-234, 6243 | CAT. NO. -
DOCUMENT UNDER PDS CONTROL NO MODIFICATION ALLOWED OUTSIDE
DRAWING NUMBER: H59003 | REV. AB
STATE: SERIAL RELEASED
PART NUMBER: See Table | REV. -
APPROVAL LEVEL: - | SHEET 1 of 1 | SCALE 4

EUR C04 112 F29 PDS