Audio Circuit

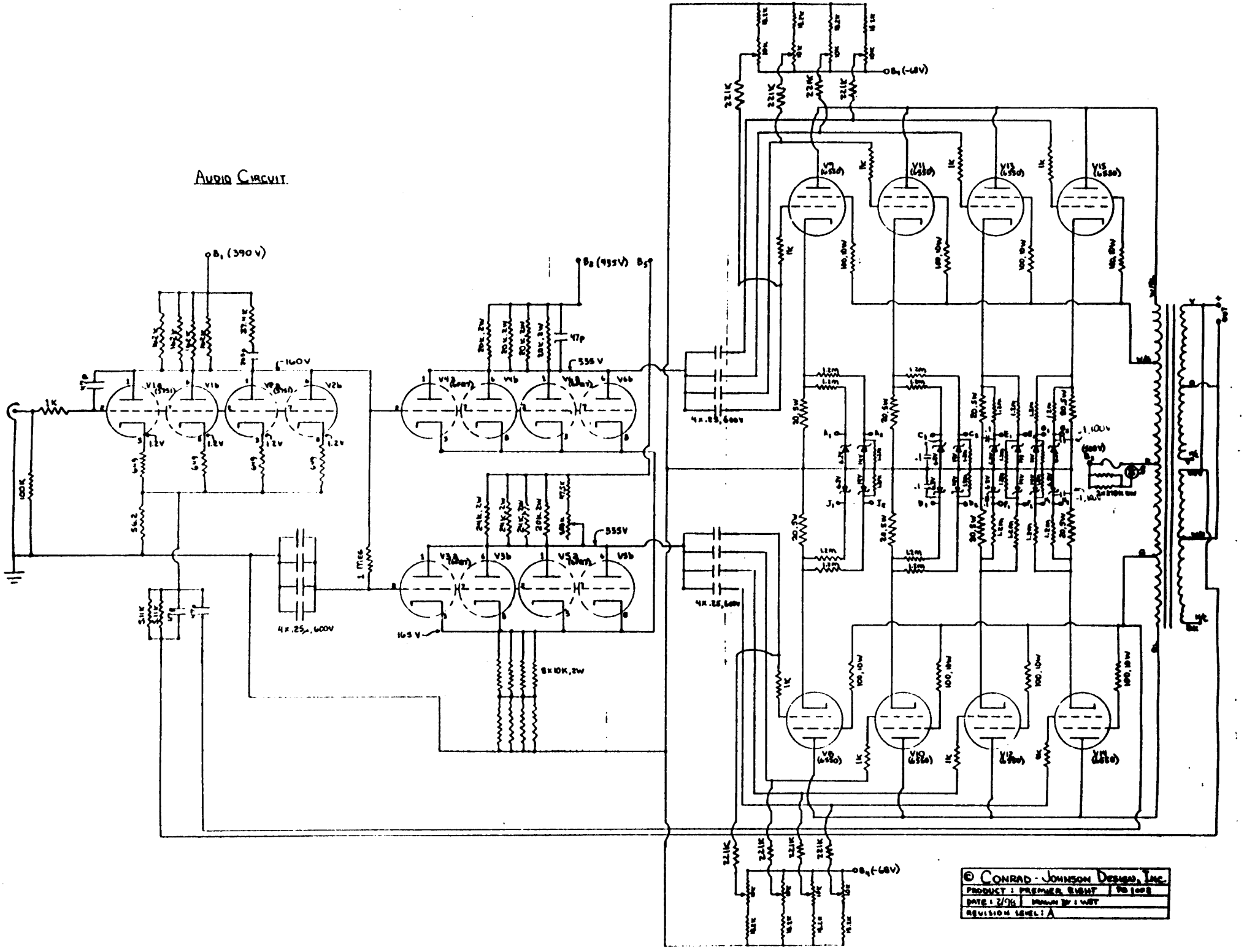

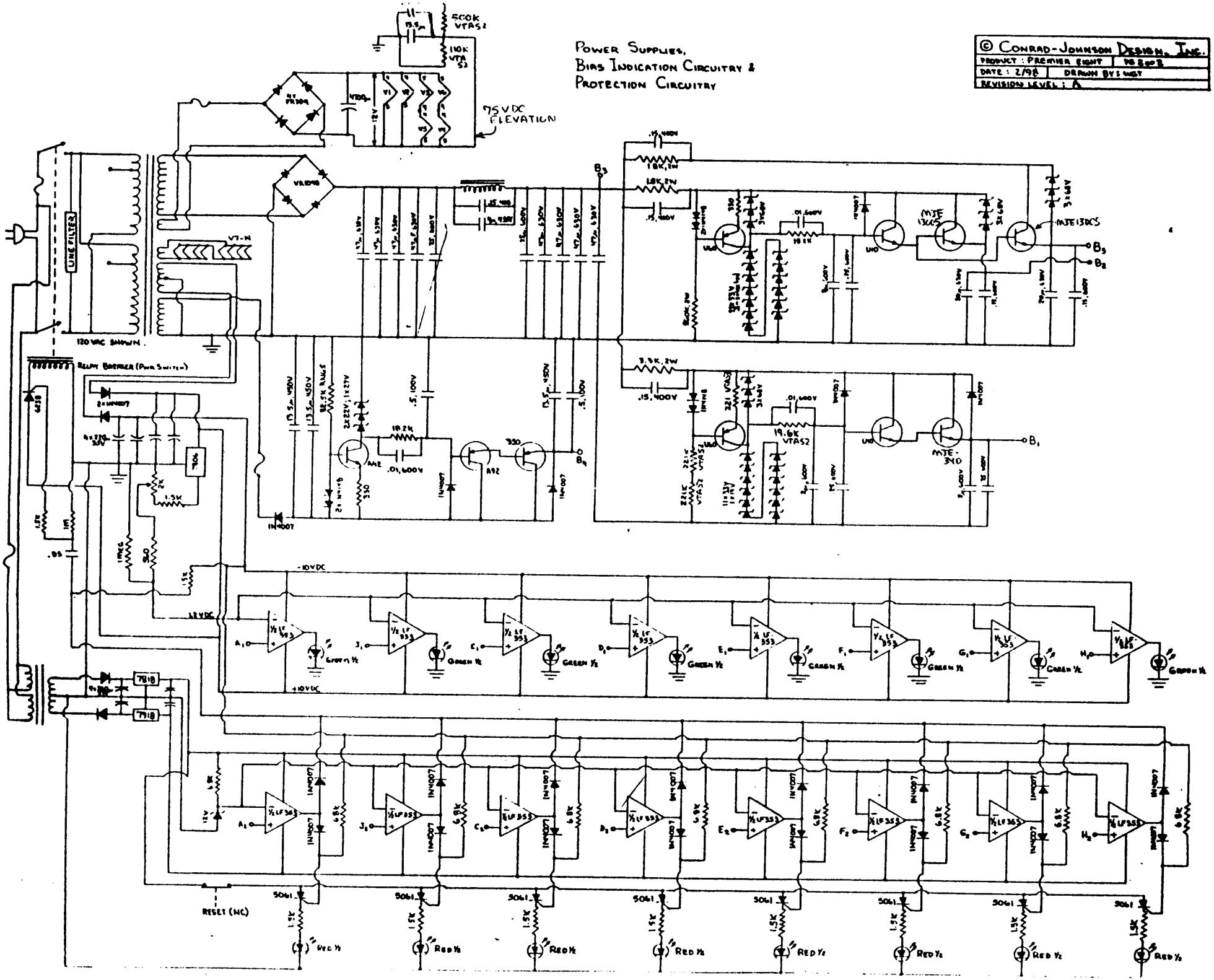
POWER SUPPLIES,
BIAS INDICATION CIRCUITRY &
PROTECTION CIRCUITRY
© CONRAD-JOHNSON DESIGN, INC.
PRODUCT : PREMIER EIGHT
DATE : 2/98
DRAWN BY: WGT
REVISION LEVEL : A
75VDC ELEVATION
LINE FILTER
120 VAC SHOWN
RELAY BARRIER (PWR SWITCH)
MJE13005
MJE-340
RESET (NC)
GREEN ½
RED ½