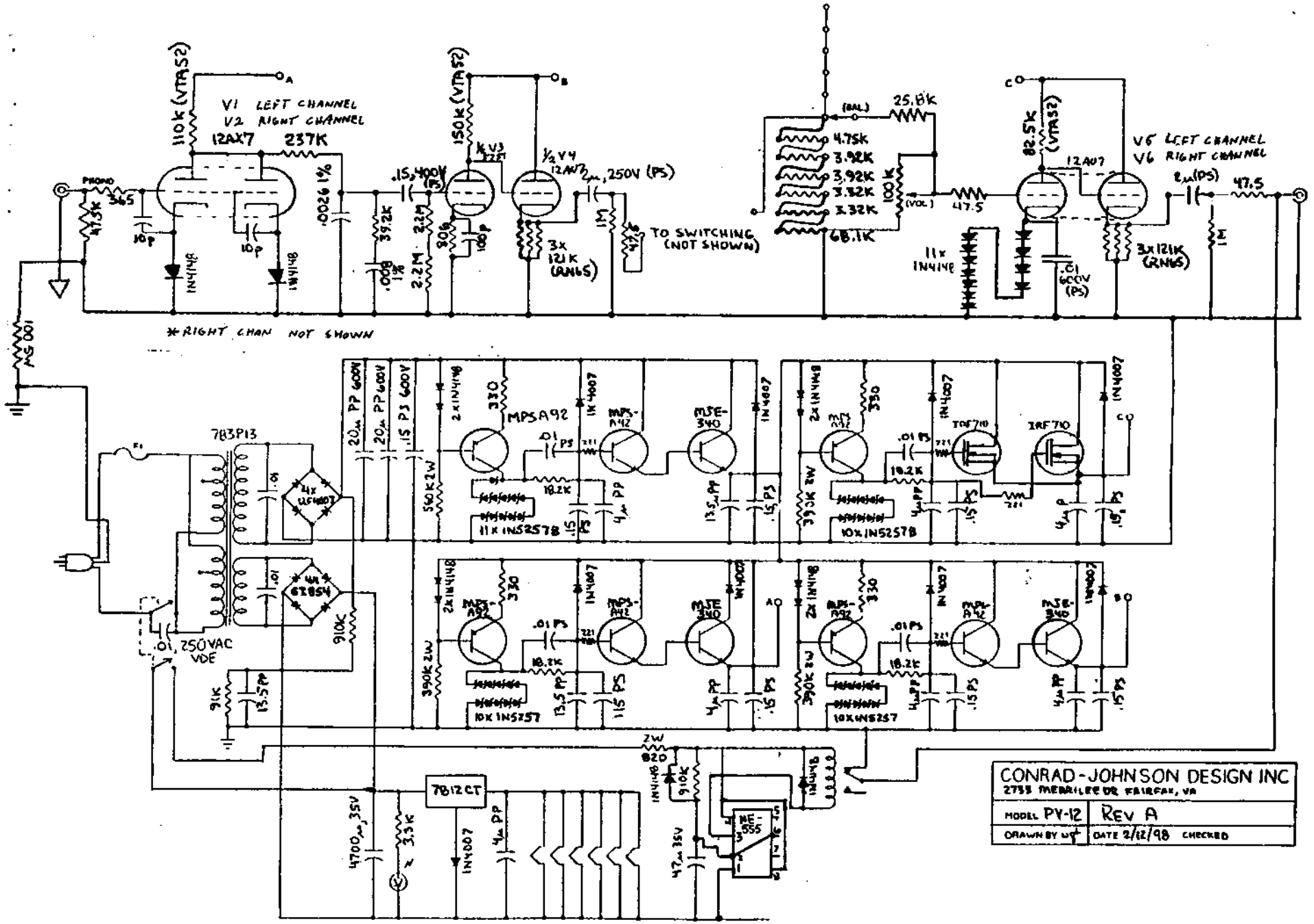

CONRAD-JOHNSON DESIGN INC
2755 MERRILEE DR FAIRFAX, VA

MODEL PV-12	REV A
DRAWN BY WT	DATE 2/12/98 CHECKED