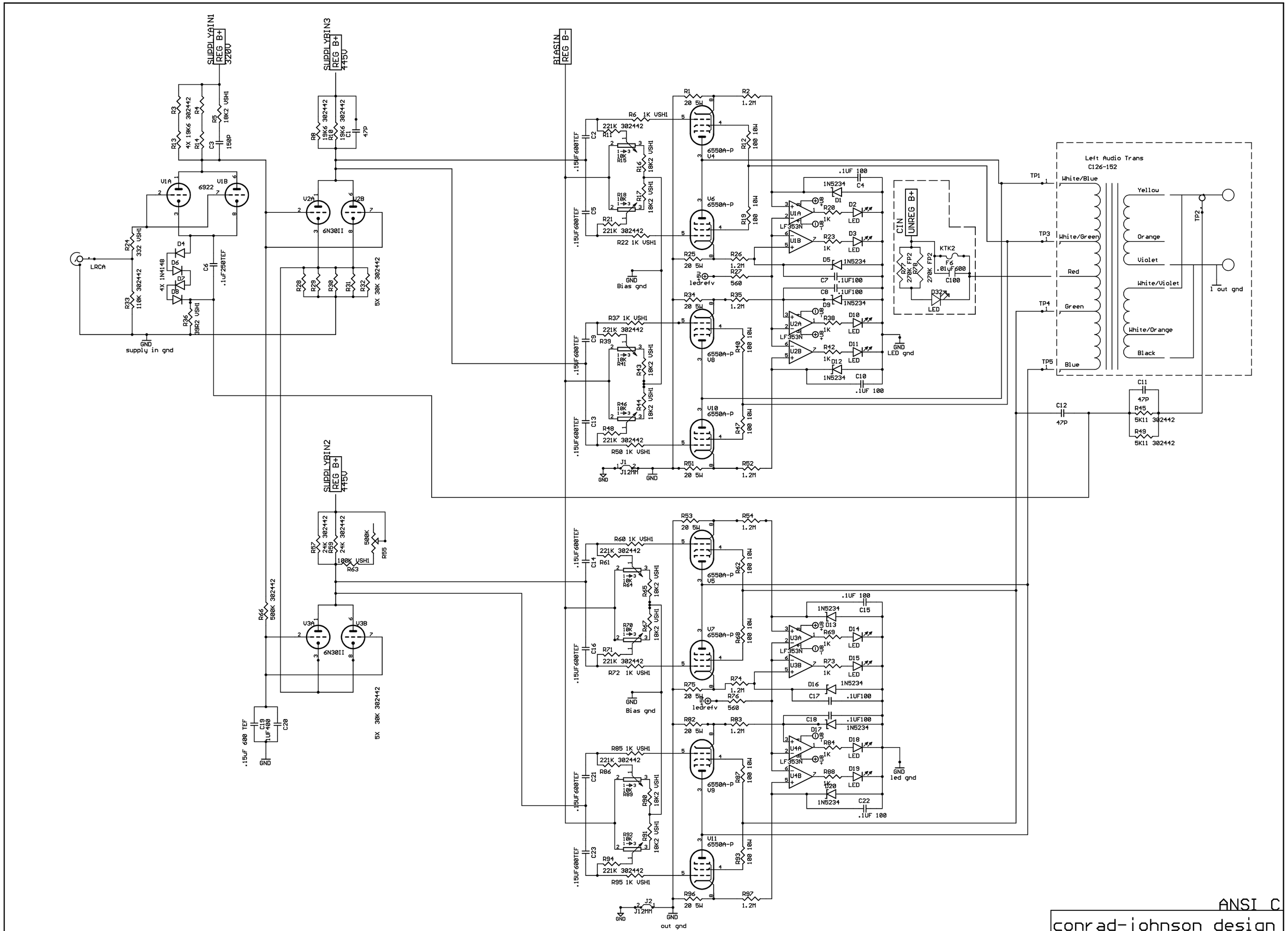

ANSI C

conrad-johnson design

TITLE: LP275M

Document Number:

REV:

Date: 11/10/2006 0B0529202

Sheet: 1/6

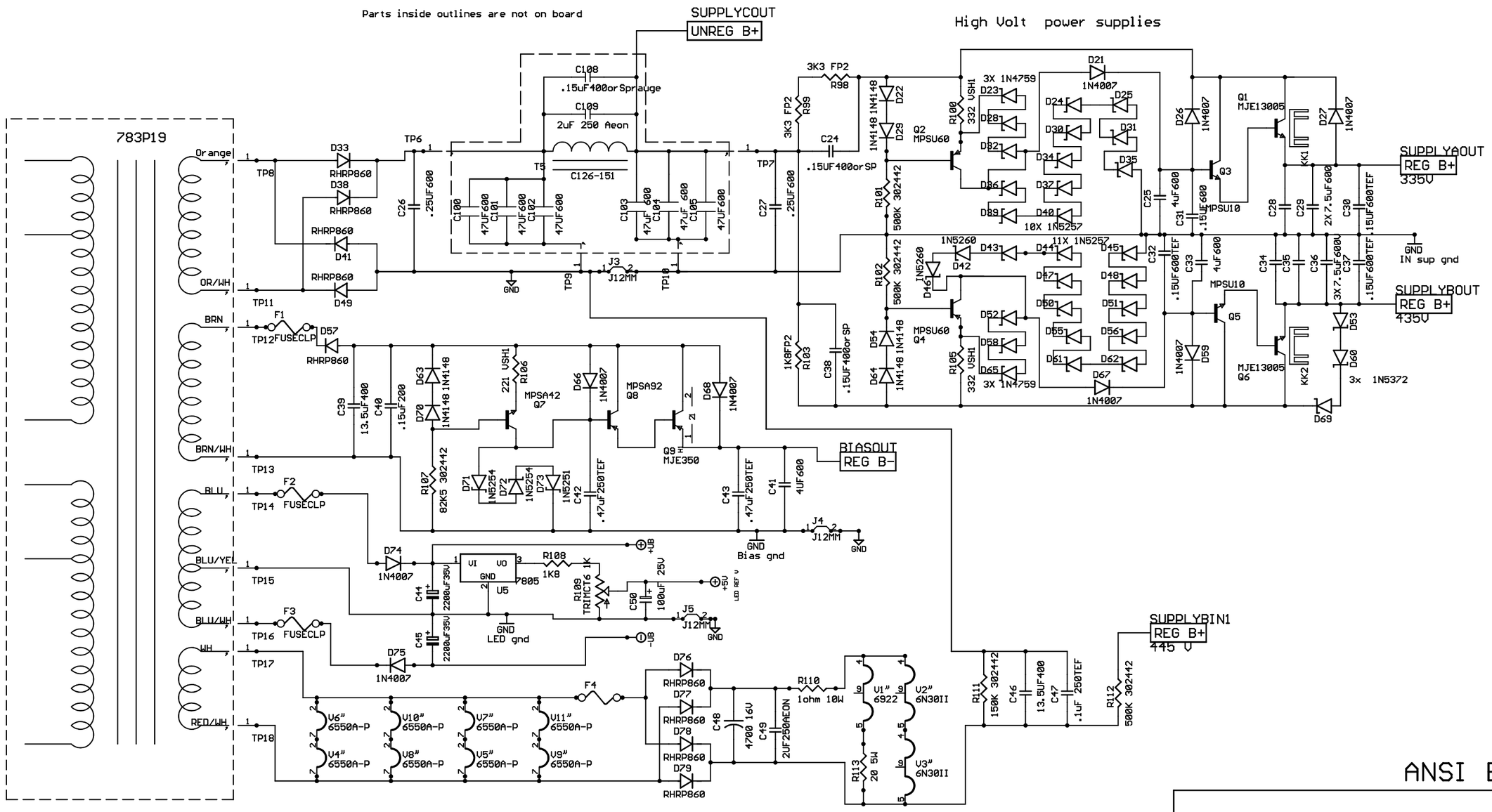
Parts inside outlines are not on board
High Volt power supplies
783P19
SUPPLYCOUT
UNREG B+
SUPPLYAOUT
REG B+
335V
SUPPLYBOUT
REG B+
435V
SUPPLYBIN1
REG B+
445 V
BIASOUT
REG B-
GND
IN sup gnd
Bias gnd
LED gnd
Orange
OR/WH
BRN
BRN/WH
BLU
BLU/YEL
BLU/WH
WH
RED/WH
TP6
TP7
TP8
TP9
TP10
TP11
TP12
TP13
TP14
TP15
TP16
TP17
TP18
T5
C126-151
C108
.15uF400orSprauge
C109
2uF 250 Aeon
C24
.15UF400orSP
3K3 FP2
R98
R99
R100
332 VSH1
R101
500K 302442
R102
500K 302442
R103
1K8FP2
R105
332 VSH1
R106
221 VSH1
R107
82K5 302442
Q2
MPSU60
Q4
MPSU60
Q1
MJE13005
Q3
MPSU10
Q5
MPSU10
Q6
MJE13005
Q7
MPSA42
Q8
MPSA92
Q9
MJE350
U5
7805
R108
1K8
R109
TRIMCT6 1K
J3
J12MM
J4
J12MM
J5
J12MM
F1
FUSECLP
F2
FUSECLP
F3
FUSECLP
F4
R110
1ohm 10W
R111
150K 302442
R112
500K 302442
R113
20 5W
V1"
6922
V2"
6N30II
V3"
6N30II
V4"
6550A-P
V5"
6550A-P
V6"
6550A-P
V7"
6550A-P
V8"
6550A-P
V9"
6550A-P
V10"
6550A-P
V11"
6550A-P
3X 1N4759
10X 1N5257
11X 1N5257
3x 1N5372
ANSI B
TITLE: LP275M
Document Number:
REV:
Date: 11/10/2006 03:52:26p
Sheet: 2/6