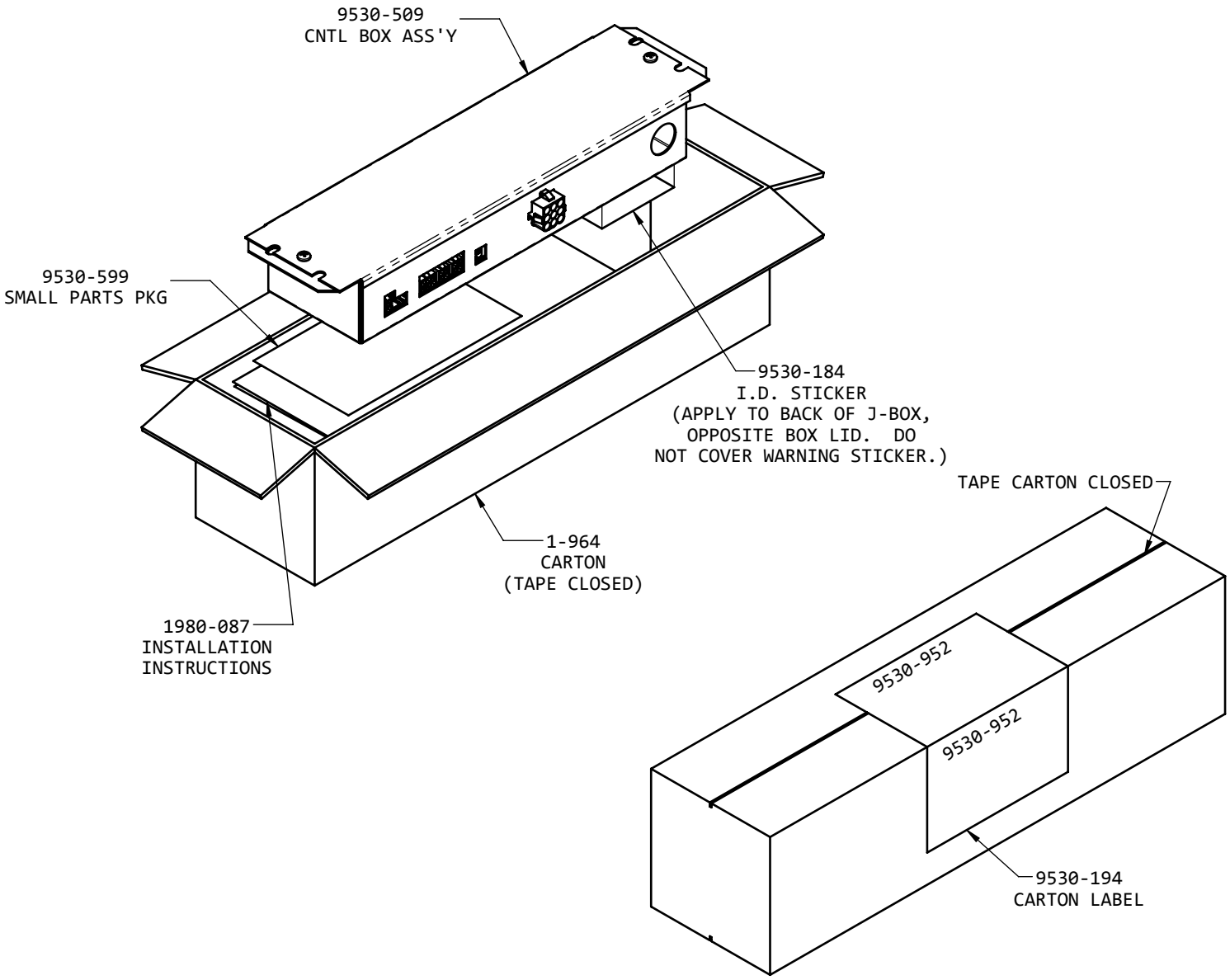

NO.	REV	SHT.
9530-952		

LTR	DATE	BY	CHKD	DRAWING CHANGES	ECO
	12-7-16	AL	AL	NEW	PDC3-1
A	10-16-17	AL	AL	REMOVED 9530-084	2211

REF. DWG.

TOLERANCES (NON-CUMULATIVE)
.X ± .1
.XX ± .05
.XXX ± .025
ANGULAR ± 3°
HOLES ±.003 DIA.
FRACTIONAL ±1/32

UNLESS OTHERWISE SPECIFIED
(A) DIM. TO TANGENT POINT
(B) DIM. TO INSIDE MOLD LINE
(C) DIM. TO OUTSIDE MOLD LINE
(F) FLUSH WITHIN
(S) SPOTWELD
BEND RADIUS:

PROJECTION - ALL DIMENSIONS IN INCHES - DO NOT SCALE PRINT

MATERIAL

FINISH SPEC.

NAME
NTWKD CNTL KIT, HP

NO. 9530-952 REV

RV PRODUCTS
AIRXCEL INCORPORATED
WICHITA, KANSAS

DIVISION OF
CHECKED

SCALE	DATE	DRAWN	APPROVED
NONE	12-7-'16	AL	D.G.