NO.	REV	SHT.
9530-509		1 OF 2

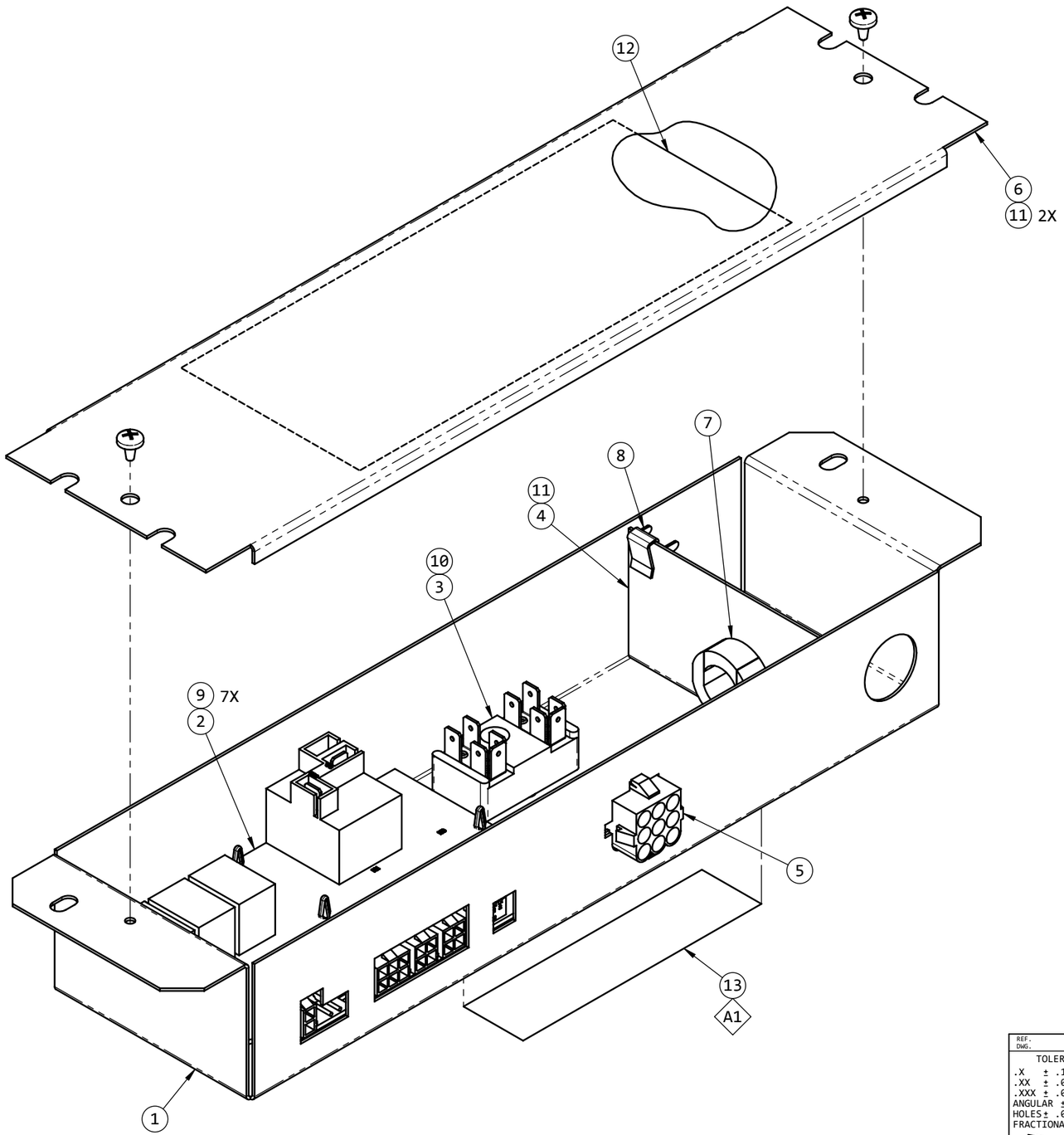

◯	PART NO.	QTY.	PART NAME
1	9330-109		CONTROL BOX
2	9530-300		CONTROL BOARD
3	6799-300		TERMINAL BLOCK
4	8330-107		DIVIDER
5	9630-375		UNIT PLUG ASS'Y
6	8330-106		BOX LID
7	1216-250		STRAIN RELIEF
8	1216-001		GROUND CLIP
9	1204-251	7	STANDOFF
10	1123B0806		SCREW
11	1123B0804	3	SCREW
12	1976-731		WIRING DIAGRAM
13	8530A140		WARNING STICKER

A1 APPLY STICKER TO BACK OF CONTROL BOX.

CONDUCT TESTS PER UL484:
"PRODUCTION LINE DIELECTRIC VOLTAGE-WITHSTAND"
"PRODUCTION LINE GROUNDING CONTINUITY"

NO.	REV	SHT.
9530-509		1 OF 2

LTR	DATE	BY	CHKD	DRAWING CHANGES	ECO
	12-7-16	AL	AL	NEW	PDC3-1

REF. DWG.

TOLERANCES (NON-CUMULATIVE)
.X ± .1
.XX ± .05
.XXX ± .025
ANGULAR ± 3°
HOLES ± .003 DIA.
FRACTIONAL ± 1/32

UNLESS OTHERWISE SPECIFIED
A DIM. TO TANGENT POINT
B DIM. TO INSIDE MOLD LINE
C DIM. TO OUTSIDE MOLD LINE
F FLUSH WITHIN
S SPOTWELD
BEND RADIUS:

PROJECTION - ALL DIMENSIONS IN INCHES - DO NOT SCALE PRINT

MATERIAL

FINISH SPEC.

NAME CNTL BOX ASS'Y, HP

RV PRODUCTS
AIRXCEL INCORPORATED
WICHITA, KANSAS

DIVISION OF

CHECKED

SCALE	DATE	DRAWN	APPROVED
NONE	12-7-'16	AL	D.G.

SHT. 1 OF 2

NO. 9530-509 REV