COOPER Bussmann

Non-Bussed Rear Terminal Mini Fuse & Relay

Cooper Bussmann Transportation Products offers a power distribution module called the 60-Position Rear Terminal Mini-Fuse and Relay panel (15310 Series.) The 15310 offers the same benefits as the standard Cooper Bussmann RTMR, however, it has a higher component density. There are 60 open cavity positions versus the 50 maximum positions of the standard RTMR. This allows you to install more fuses, breakers, diodes or relays without increasing any outer dimensions! The unit is non-bussed to allow you to place components anywhere within the block. This makes the 15310 suitable for virtually any application in marine, construction, agriculture, heavy trucking, and specialty vehicle industries. With cover, cable seals and cavity plugs installed, the 15310 is a weather tight enclosure (IP66) for power distribution. (The 15310 uses the same covers and mounting as the standard RTMR.)

RTMR Product Features

Blade Terminals: Accepts ATM (mini) blade fuses, circuit breakers as well as other components such as relays, diodes, flashers, etc. with 2.8mm blades on 8.1mm centerline spacing
Mounting: #10-32 or M5 Threaded inserts; 24 in-lbs (2.7N•m) max torque
Material: Housing and cover: black thermoplastic
Labels: Component location IDs molded on top of housing; custom inside cover labels available. Contact factory for information.
Ratings: 30A max per terminal; 12/24Vdc
Temperature Rating: -40°C (-40°F) to 125°C (260°F) (rating on PDM only)
Ingress Protection Rating: IP66–IEC 529 (valid when properly installed with cover, cable seals and cavity plugs. Contact factory for specific IP test specifications applicable to RTMR).
Electrical Connections: Output cavities (holes in back of unit):
- **Wire Size:** #12-#20 AWG
- **Terminals:** Tyco AMP® MCP2.8 Series
  20-16 AWG (0.50-1.00mm2): Terminal #1-968855-1 Seal #828904-1
  14-12 AWG (1.50-2.50mm2): Terminal #1-968857-1 Seal #828905-1
- **Cavity Plugs:** Tyco AMP® MCP2.8 Series #828922-1 (where output wires are not used)

Notes:
1. Cooper Bussmann does NOT supply wires, wire terminals, terminal seals or cavity plugs.
2. Mounting brackets offered for surface mounts.
3. Consult factory for options including custom labels and replacement accessories.
4. 15310 series uses Tyco terminals vs. Delphi as commonly used with our standard RTMR series

Part Numbering System

Series		Mounting Option		Cover Options	Marking Options
15310	-	☐	-	☐	(☐)
		1 - #10-32 threaded insert 2 - M5 threaded insert		0 - No Cover 1 - Fuse Cover 2 - Relay/CB Cover	Consult factory for custom marking options
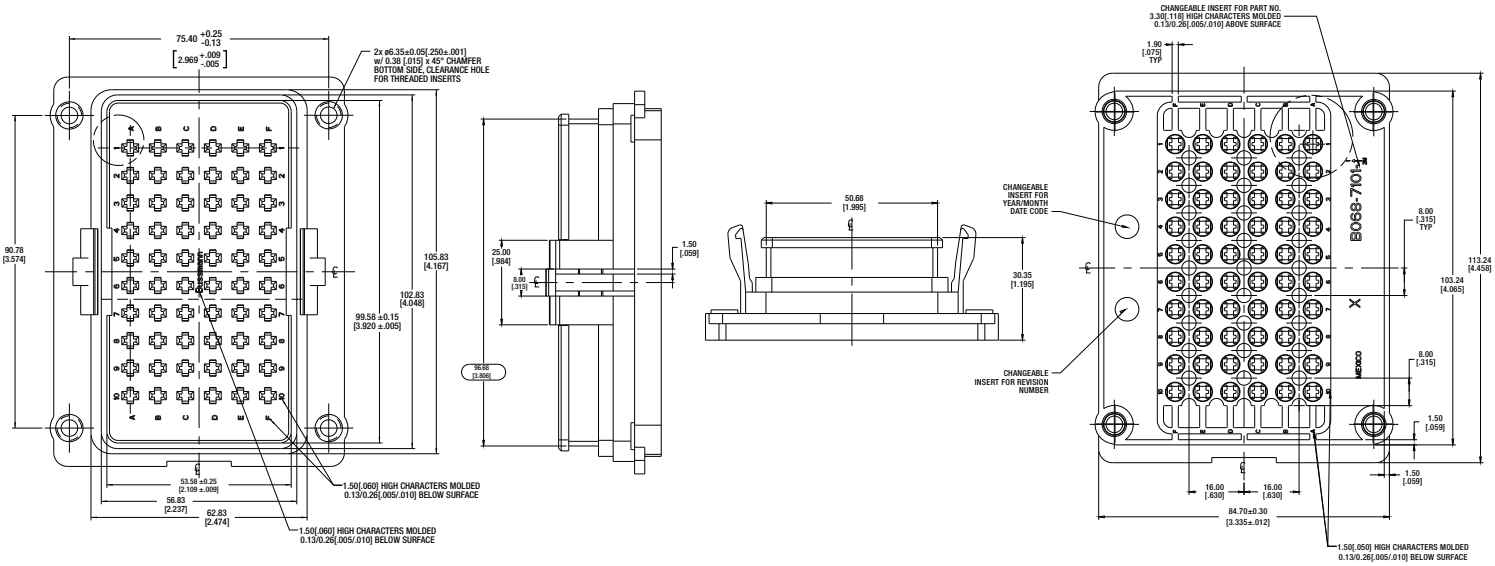
Dimensions - mm(in)