PINOUT AND WIRE REQUIREMENTS

PIN	WIRE SIZE	DESCRIPTION
1	14AWG	TO BATTERY (+) VIA 15A FUSE
2	18AWG	TO SWITCHED IGNITION LINE
3	18AWG	CAN HIGH
4	PLUGGED	
5	PLUGGED	
6	PLUGGED	
7	PLUGGED	
8	PLUGGED	
9	PLUGGED	
10	18AWG	CAN LOW
11	PLUGGED	
12	14AWG	TO BATTERY (-)

ACTUATOR/CABLE PARTS LIST CHART

ITEM	ORSCHELN NUMBER	DESCRIPTION	QTY
10	000-46119-0000	PUSH PULL CABLE ASSEMBLY	1
20	54020158	PRODUCT LABEL	1
30	E312-00	SACT4.2 ELECTRONIC ACTUATOR	1
40	000-59607-0000	TRANSMISSION KIT	1

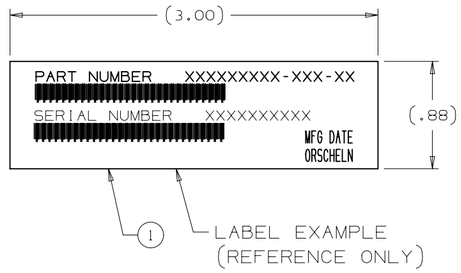

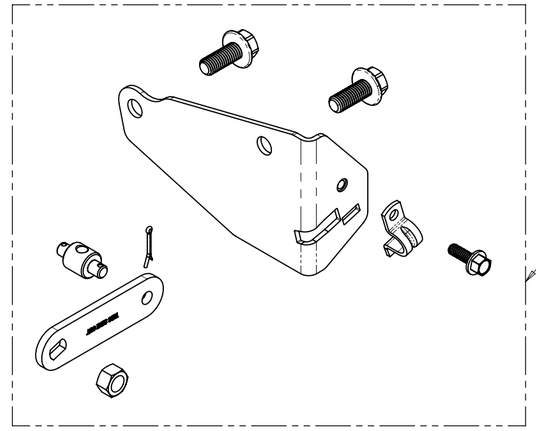

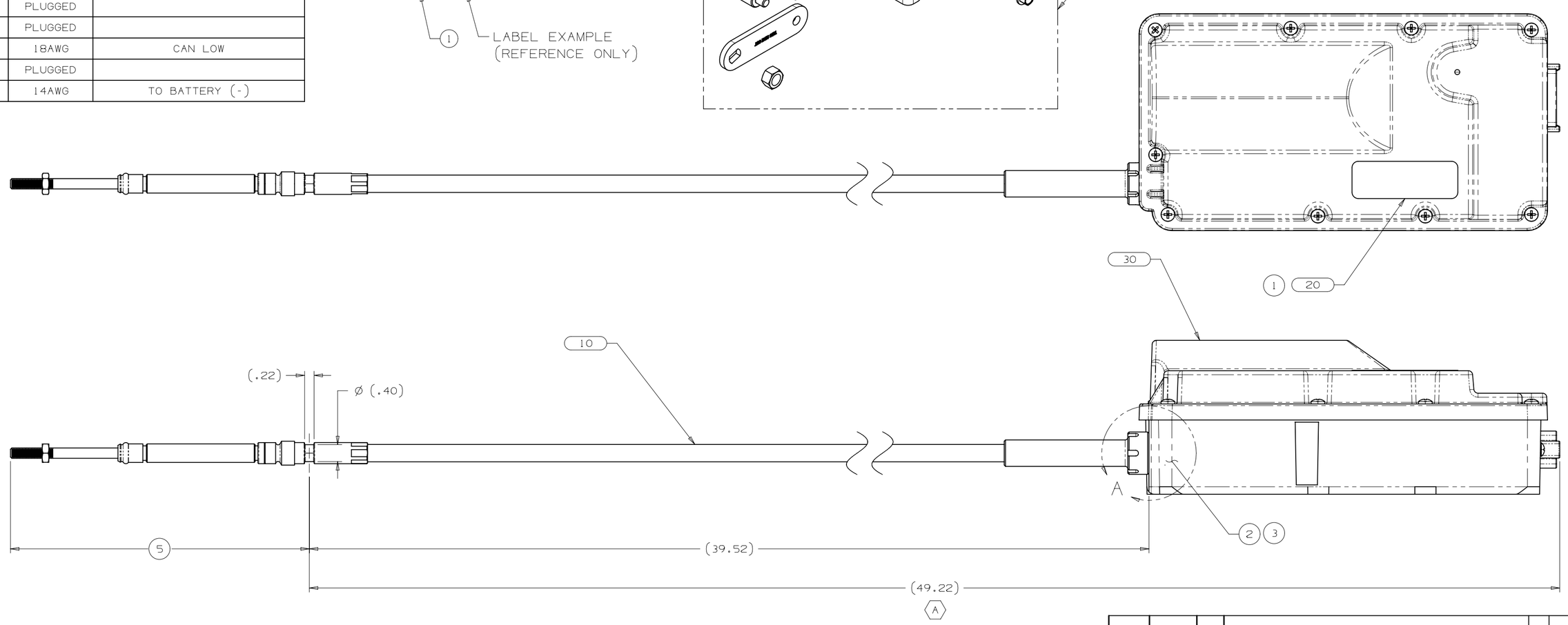

NOTES UNLESS OTHERWISE SPECIFIED:

1. IDENTIFY ASSEMBLY WITH LABEL TO INCLUDE:
   CUSTOMER PN AND BARCODE
   SERIAL NUMBER AND BARCODE
   MFG DATE
   ORSCHELN
2. APPLY THREADLOCKER (58020038) LOCTITE PN 37087 QUICKSTIX 248 MEDIUM STRENGTH TO CABLE END FITTING THREADS BEFORE INSERTING INTO THE RACK
3. TORQUE CABLE THREADED END FITTING TO RACK TO 25 ±2 in-lb
4. TORQUE CONDUIT END FITTING TO ACTUATOR TO 30 ±2 FT-LB
5. (A) ASSEMBLY TO SHIP IN NEUTRAL POSITION 7.778 ±0.030

EA1H39A01 - XXX - XX

PHYSICAL ASSEMBLY — PROGRAM DATA — CUSTOMER INFORMATION

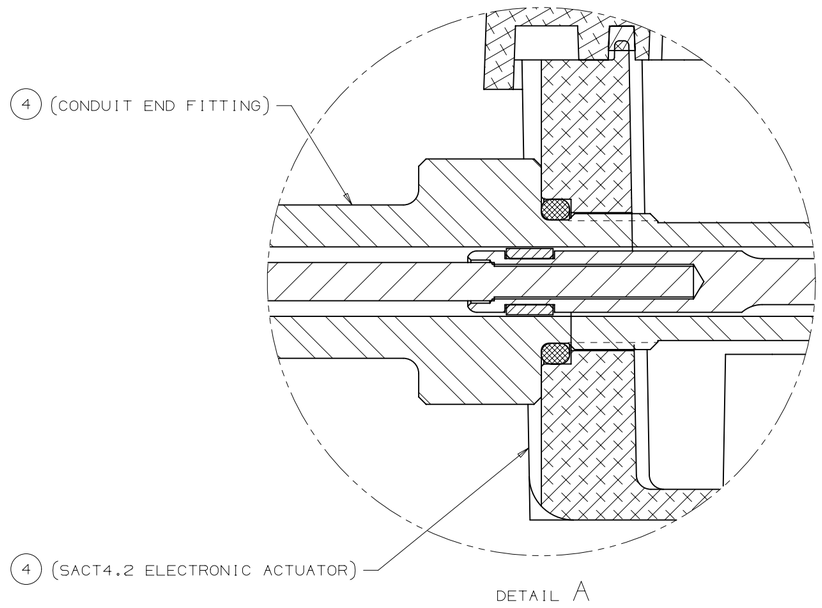

DETAIL A

ECN	DATE	REV	REVISION	DR	CK	3DL	LN
							L12
							L11
							L10
							L9
							L8
							L7
							L6
							L5
			TO NEW LOCATION OF CL OF CONDUIT FITTING (49.22)	KA	EB	OO	L4
			MOVED OVERALL LENGTH REF DIMENSION (56.28)				L3
1807404	032018	A	NOTE 5: ADD 7.778 ±0.030 DIMENSION;				L2
24190	091117	--	ORIGINATED DRAWING PER #CS17-0484	KA	KW	OO	L1

EAR CONTROL - EAR99

MATERIAL: ----

TREATMENT/FINISH: -----

WT: NA LBS VOL: NA IN³ SURFACE AREA: NA IN²

DO NOT SCALE — THIRD ANGLE PROJECTION

LRG SIZE TITLEBLOCK — PRIMARY UNITS INCHES — DRAWING INFORMATION SUPERCEDES ANY 3D DATA

PROPRIETARY NOTICE: THIS DOCUMENT AND ALL DATA CONTAINED HEREIN IS PROPRIETARY AND CONFIDENTIAL INFORMATION. THIS INFORMATION MUST BE MAINTAINED AS CONFIDENTIAL, NOT PROVIDED TO ANY THIRD PARTY, AND USED ONLY FOR APPROVED PURPOSES. PRINTED COPIES ARE UNCONTROLLED AND MUST BE DESTROYED OR RETURNED AFTER USE.

UNLESS OTHERWISE SPECIFIED
SCALE: NTS
ANG ± 2°
.XX ± .01
.XXX ± .005

ORSCHELN MOBERLY, MO

CAGE CODE: 92867

DRFT: KALEXANDER | CHK: K WESSEL | DATE: 091117

NAME: REMOTE SACT 4.2 W/ KIT

PART NO. EA1H39A01-XXX-XX

SHEET 1 OF 1