PART NUMBER	ECN NO	REV	CHANGE	BY	DATE
43050117	--	NEW	NEW RELEASE	MWN	8/1/2013
	B-22434	A	ADDED 121 32217023	MWN	12/12/2013

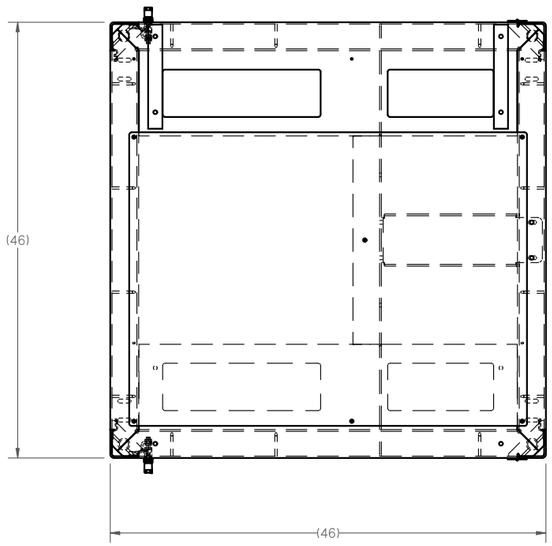

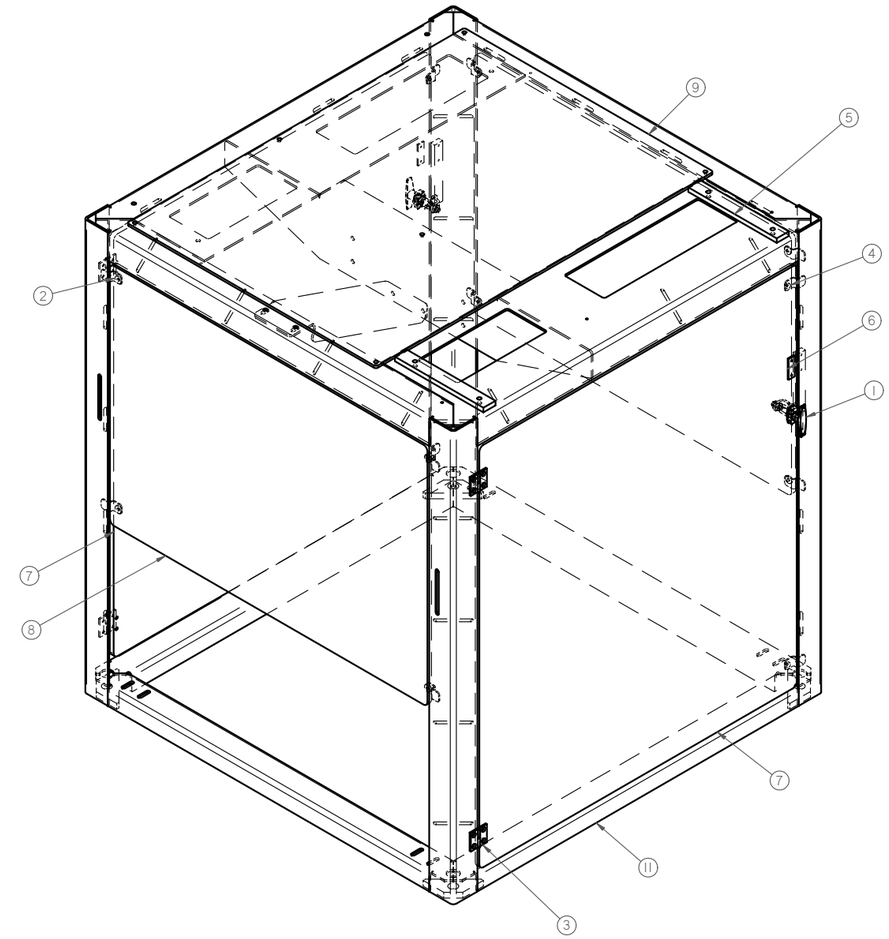

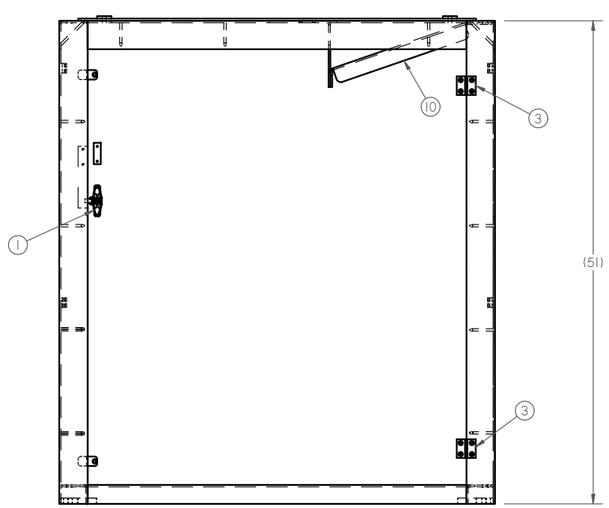

ITEM	PART No.	DESCRIPTION	QTY
11	41201371	FRAME,DENESTER,STANDARD,12" EL	1
10	37651813	GUSSET,FRAME,DENESTER	1
9	37651812	GUARD,TOP,DENESTER,STANDARD	1
8	37651412	PANEL	2
7	37651411	DOOR	2
6	32217023	PLATE,BACKING-SAFETY SW	2
5	31000597	ELEC CABINET SPACER	2
4	28000040	BUMPER, 1/4 DIA STEM	4
3	27946033	HINGE, CHROME	4
2	23050042	WASHER RUBBER, 1/4 SCREW, 3/4 OD	8
1	22971299	LATCH,T-HANDLE	2

MATERIAL SPECIFICATION:

MATERIAL SIZE or PATTERN:

APPLIED FINISH: N/A

DIMENSION LIMITS U.O.S. ARE
X.X - EQUALS PLUS or MINUS .06
X.XX - EQUALS PLUS or MINUS .015
X.XXX - EQUALS PLUS or MINUS .005
ANGULAR ±1 ° - FRACTIONAL ±1/32

NOTE:
A) FINISH TO 125 UNLESS OTHERWISE SPECIFIED
B) BREAK ALL SHARP EDGES & CORNERS TO .005/.010
C) ALL DIMENSIONS ARE IN INCHES UNLESS OTHERWISE SPECIFIED

SOLID EDGE

SCALE: NTS | SHEET: 1 OF 1
DRAWN BY: MWN | DATE: 8/1/2013

CONFIDENTIAL PROPERTY OF AMF AUTOMATION TECHNOLOGIES, INC., NOT TO BE USED, COPIED OR SHOWN WITHOUT PRIOR WRITTEN PERMISSION

PART NAME: FRAME ASSY, DENSTER, STD, 12"
SIZE: D
PART NUMBER: 43050117
REV: A